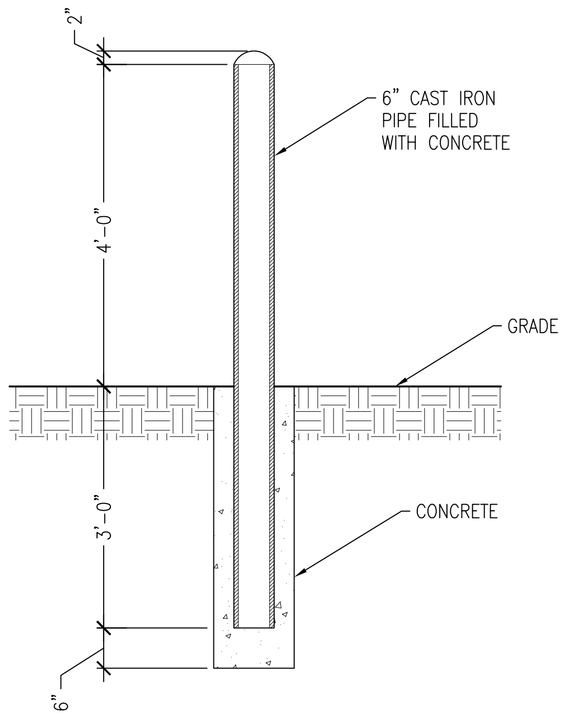

X / A-3 BOLLARD DETAIL
SCALE: 3/4" = 1'-0"

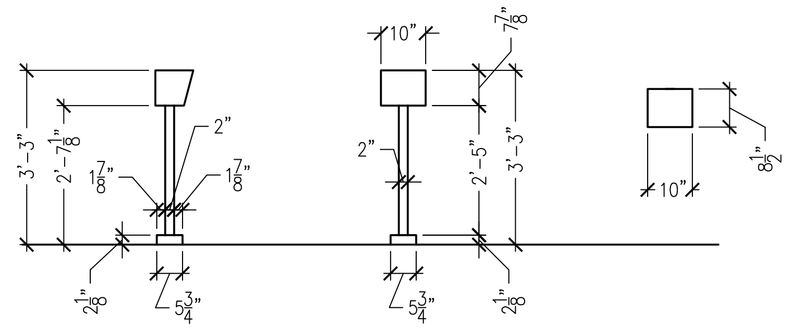

X / A-3 CARD READER DETAIL-(VEHICLE ACCESS)
SCALE: X/X" = 1'-0"

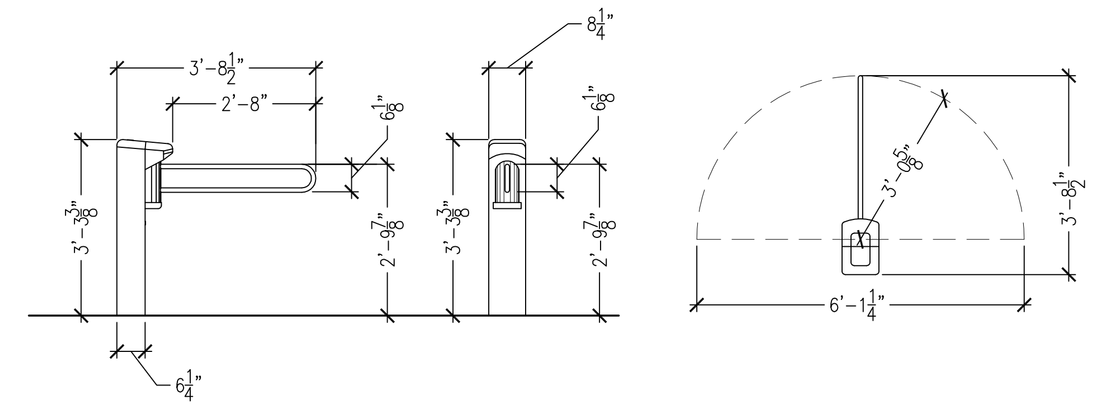

X / A-3 HC ACCESS GATE DETAIL
SCALE: X/X" = 1'-0"

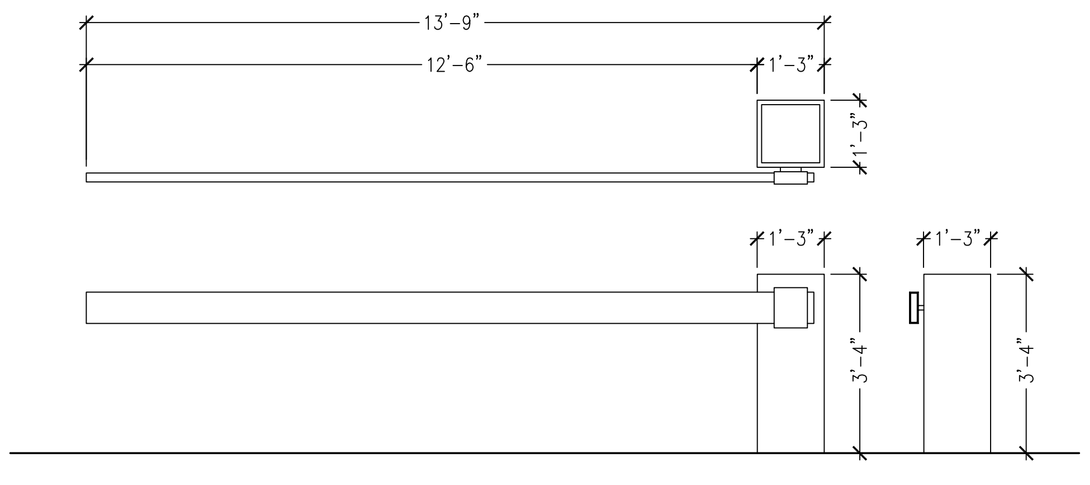

X / A-3 PEDESTRIANS GATE DETAIL
SCALE: X/X" = 1'-0"

X / A-3 BARRIER GATE DETAIL
SCALE: 1/2" = 1'-0"

X / A-3 CARD READER DETAIL-(PEDESTRIANS ACCESS)
SCALE: X/X" = 1'-0"

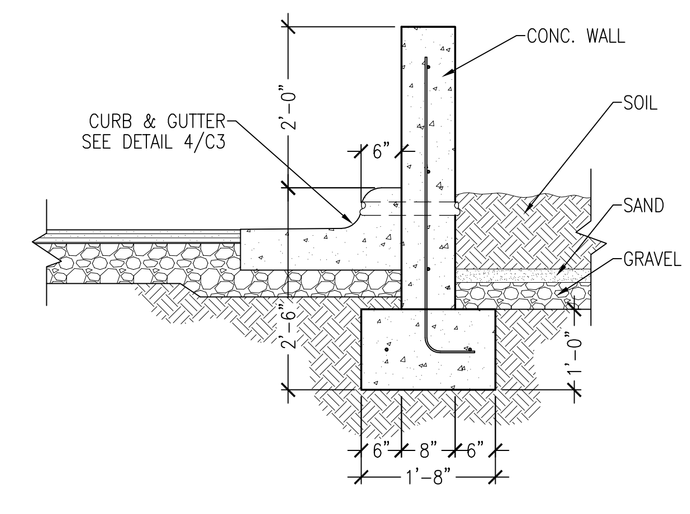

X / A-3 CONCRETE PLANTER-SECTION
SCALE: 3/4" = 1'-0"

INTEC aec
2500 Brighton Dam Road, Brookeville, Maryland 20833
p. 301.570.4100 f. 301.570.4101 www.INTECaec.com

REV.	DESCRIPTION	DATE

ARMED FORCES RETIREMENT HOME
EAGLE GATE RENOVATION
3700 NORTH CAPITOL STREET N.W. WASHINGTON D.C 20317

DETAILS
ARCHITECTURAL

DESIGNED:	PL
DRAWN:	CB,NE
REVIEWED:	SK
JOB #:	210005
SCALE:	AS SHOWN
DATE:	00-00-0000

A-3

SHEET 0X OF 11