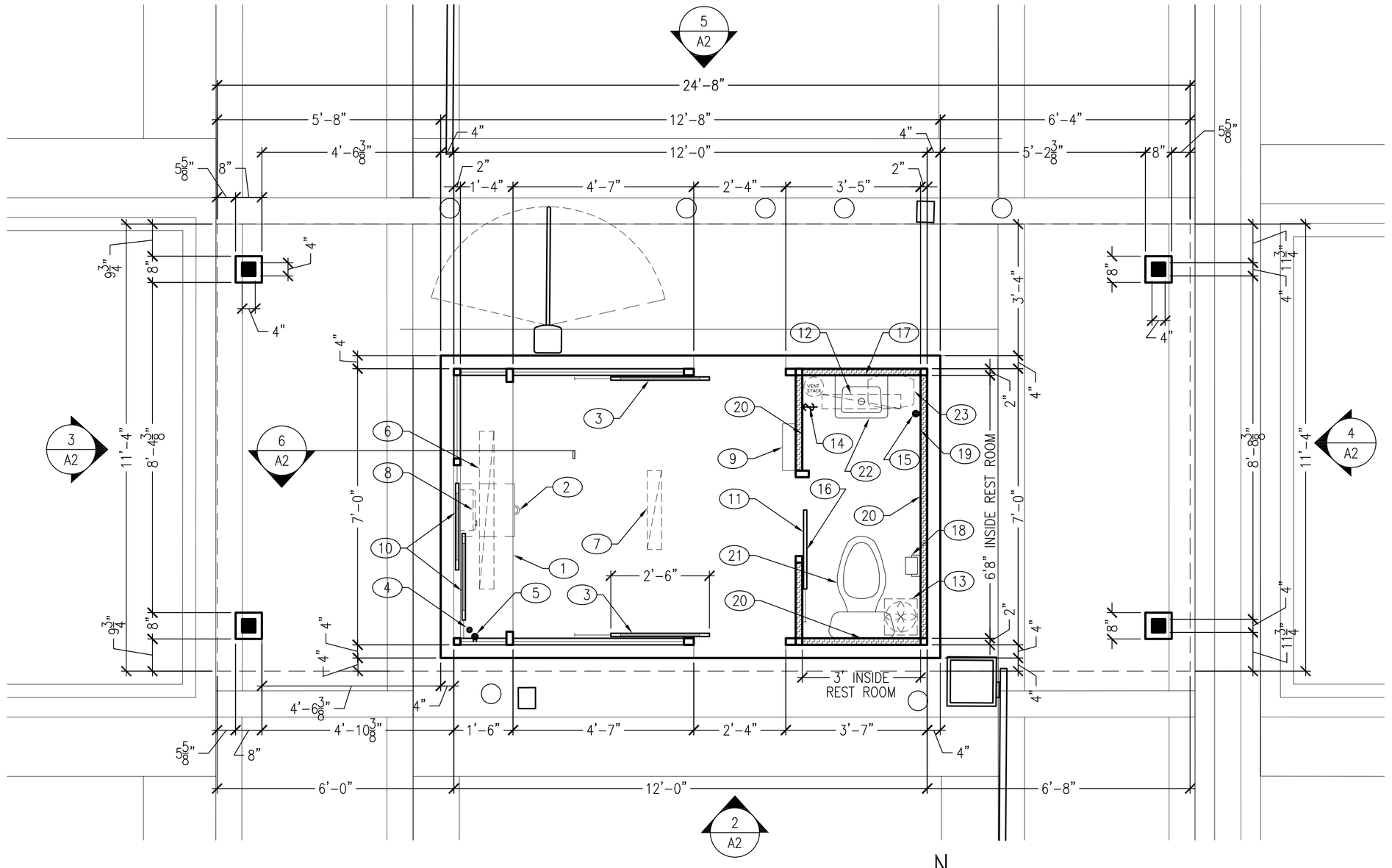

1 A-1 FLOOR PLAN – GUARD HOUSE
SCALE: 1/2" = 1'-0"

N

1. COUNTER– 18" DEEP PAINTED GALVANIZED STEEL MOUNTED AT SILL.
2. PAINTED STORAGE DRAWER BENEATH COUNTER.
3. DOOR– 30" WIDE, SLIDING WITH WEATHER–STRIPPING, BALL BEARING HANGERS, HEAVY DUTY TRACK, PAINTED STEEL KICK PANEL, SAFETY GLAZING, LOCK, AND HARDWARE.
4. HOLE IN COUNTER FOR DROP CORDS.
5. DUPLEX OUTLET MOUNTED BELOW COUNTER.
6. FLUORESCENT LIGHT FIXTURE WITH SWITCH ATTACHED.
7. FLUORESCENT LIGHT FIXTURE WITH SWITCH ATTACHED.
8. HEATER– WALL MOUNTED WITH INTEGRAL THERMOSTAT CONTROL.
9. C.B. PANEL– 12 SPACE, 120/240V, 1ø–3 WIRE WITH GROUND WIRE. 100 AMP MAIN BREAKER INCLUDED.
10. SLIDING WINDOW
11. SLIDING PRIVACY DOOR WITH LOCK.
12. FLUORESCENT LIGHT FIXTURE.
13. EXHAUST FAN.
14. SWITCH FOR REST ROOM LIGHT AND EXHAUST FAN.
15. GFI RECEPTACLE.
16. COAT HOOK MOUNTED ON DOOR.
17. MIRROR.
18. TOILET PAPER HOLDER.
19. PAPER TOWEL DISPENSER.
20. OFF WHITE FIBERGLASS REINFORCED PANEL BACK SPLASH.
21. WATER CLOSET WITH OPEN FRONT SEAT.
22. LAVATORY WITH CHROME FAUCET.
23. ARISTON 2–1/2 GALLON POINT OF USE WATER HEATER.

A. GLAZING– TEMPERED SAFETY GLAZING SET IN ANODIZED ALUMINUM WINDOW FRAMES. VENT WINDOWS WITH INSECT SCREENS.
B. PAINT– A RUST INHIBITIVE PRIMER WITH AN INDUSTRIAL FINISH.
C. ELECTRICAL– ALL WIRING BY PAR–KUT TO BE #12(MIN) STRANDED COPPER, THHN ENCLOSED IN 1/2"(MIN) E.M.T. PER NATIONAL ELECTRIC CODE. FITTINGS, FIXTURES, AND DEVICES ARE U.L. LABELED. ALL WIRING TO TERMINATE AT C.B. PANEL. ALL CIRCUITS HAVE GREEN GROUND WIRE.

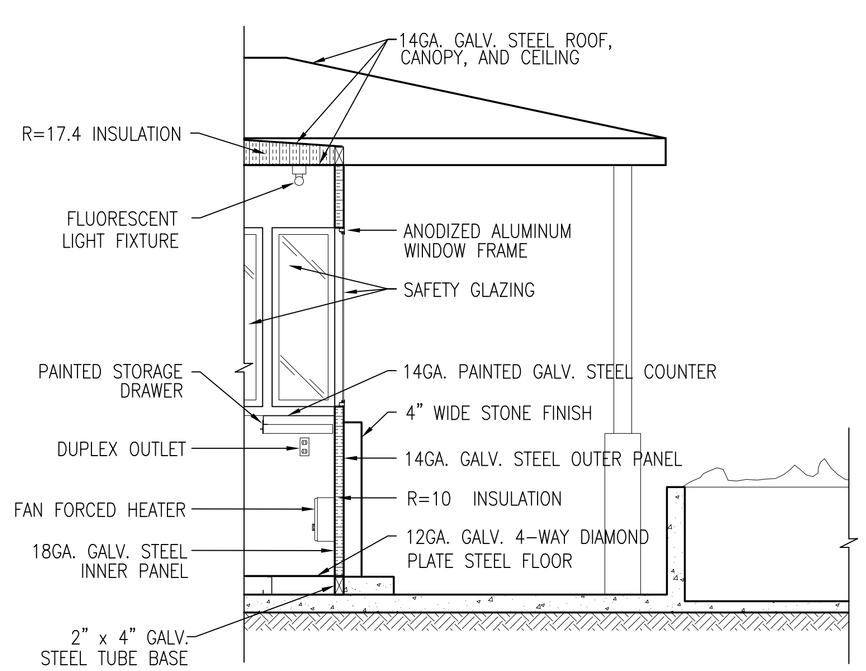

6 A-2 SECTION
SCALE: 1/2" = 1'-0"

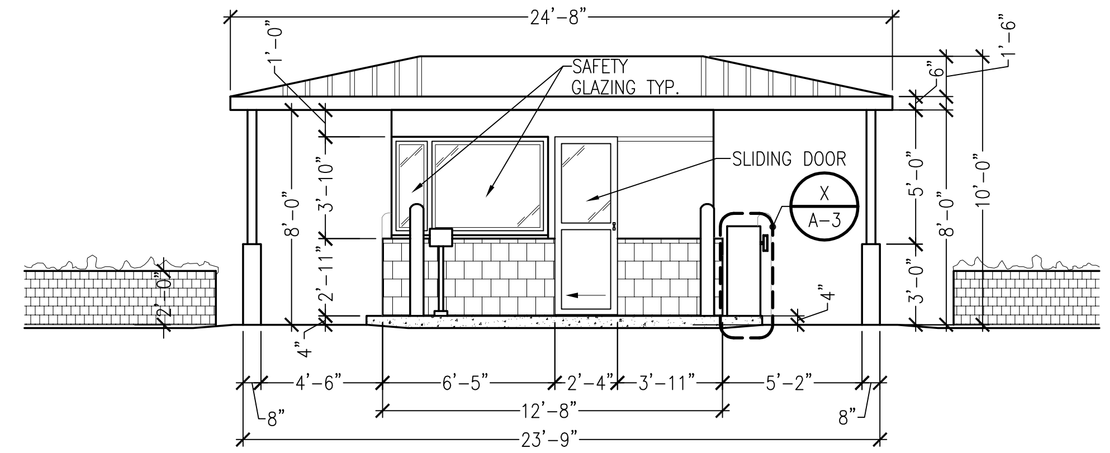

2 A-2 SIDE ELEVATION
SCALE: 1/4" = 1'-0"

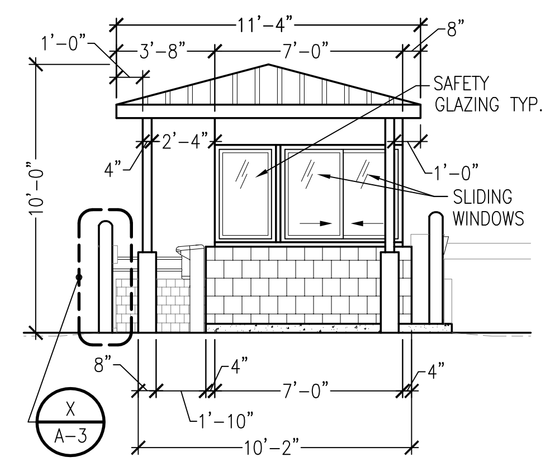

3 A-2 FRONT ELEVATION
SCALE: 1/4" = 1'-0"

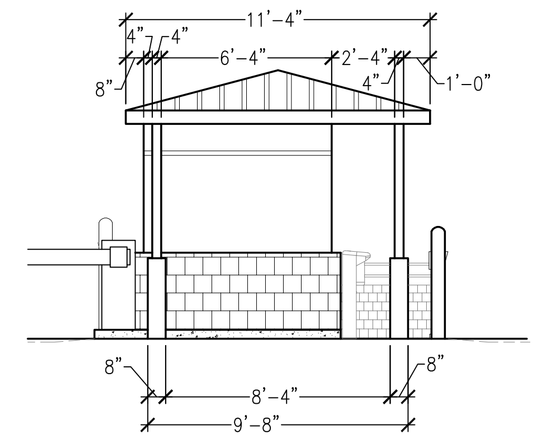

4 A-2 BACK ELEVATION
SCALE: 1/4" = 1'-0"

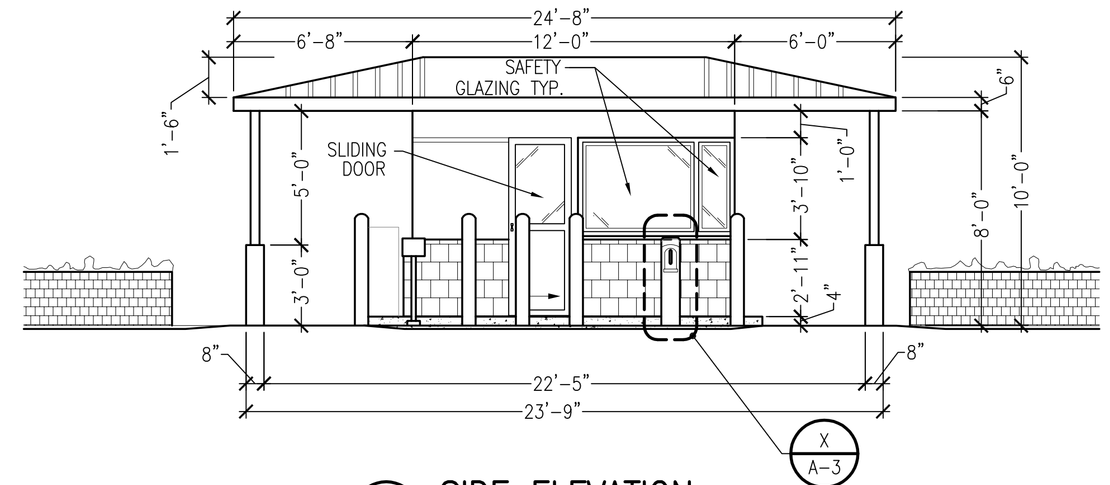

5 A-2 SIDE ELEVATION
SCALE: 1/4" = 1'-0"

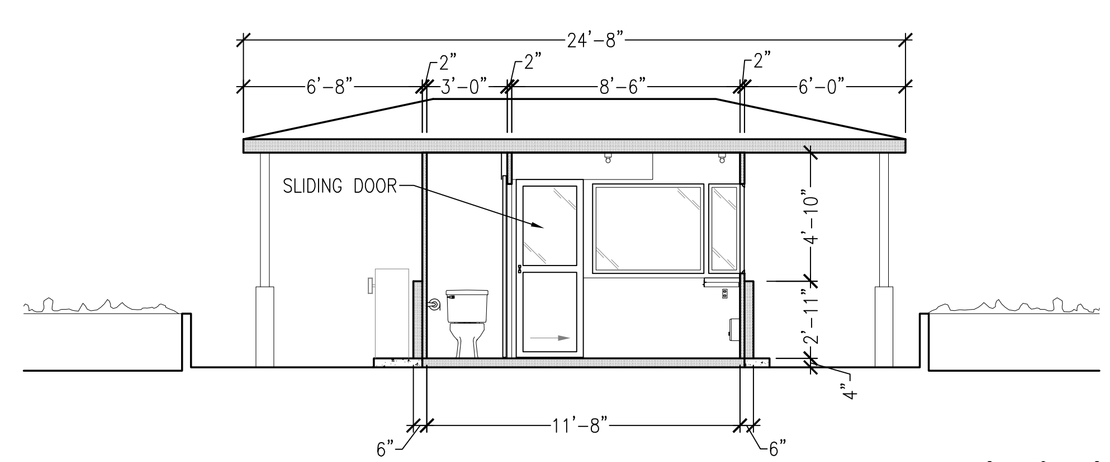

6 A-2 SECTION
SCALE: 1/4" = 1'-0"

2 0 2 4
1/4" = 1'-0"

1 0 1 2
1/2" = 1'-0"

INTEC aec
2500 Brighton Dam Road, Brookeville, Maryland 20833
p. 301.570.4100 f. 301.570.4101 www.INTECaec.com

REV.	DESCRIPTION	DATE

ARMED FORCES RETIREMENT HOME
EAGLE GATE RENOVATION
3700 NORTH CAPITOL STREET N.W. WASHINGTON D.C 20317

FLOOR PLAN – ELEVATIONS
ARCHITECTURAL

DESIGNED:	PL
DRAWN:	CB,NE
REVIEWED:	SK
JOB #:	210005
SCALE:	1/4"=1'-0"
DATE:	00-00-0000

A-2

SHEET 0X OF 11