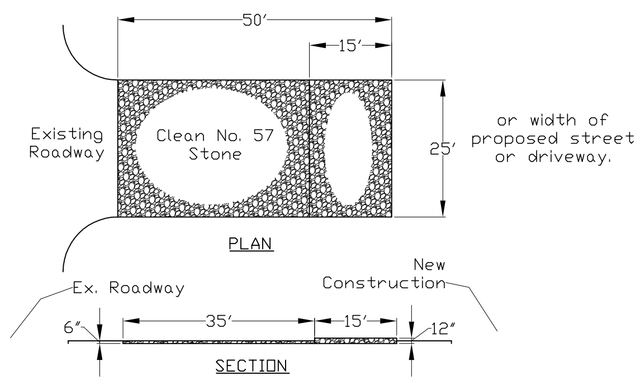

1 C3 CONSTRUCTION ENTRANCE

NOT TO SCALE

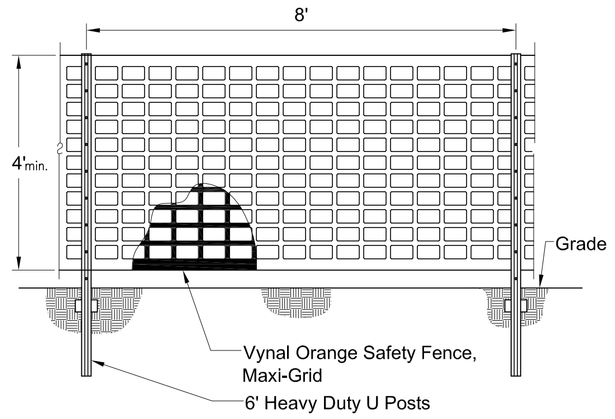

2 C3 TREE PROTECTION FENCE

SCALE: 1/2" = 1'-0"

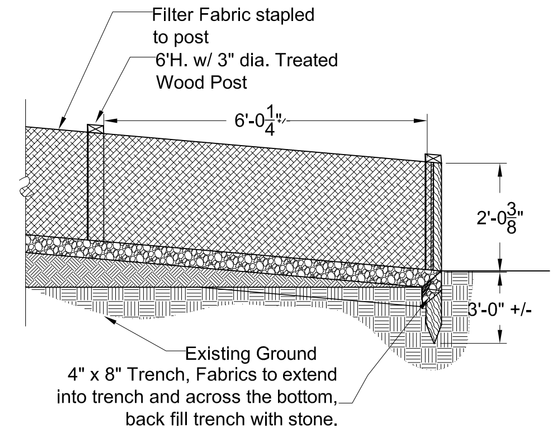

3 C3 SILT FENCE

SCALE: 1/2" = 1'-0"

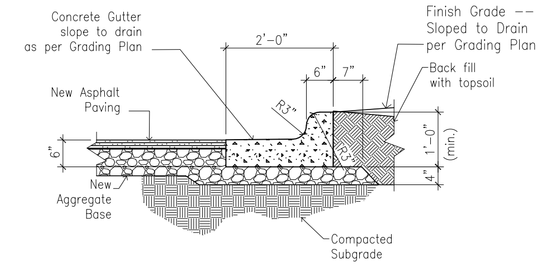

4 C3 TYP. CURB & GUTTER SECTION

SCALE: 1/2" = 1'-0"

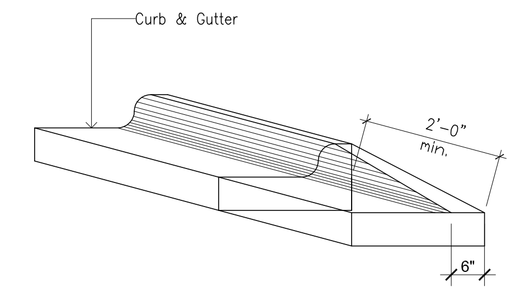

5 C3 TYP. CURB TRANSITION SECTION

SCALE: 1/2" = 1'-0"

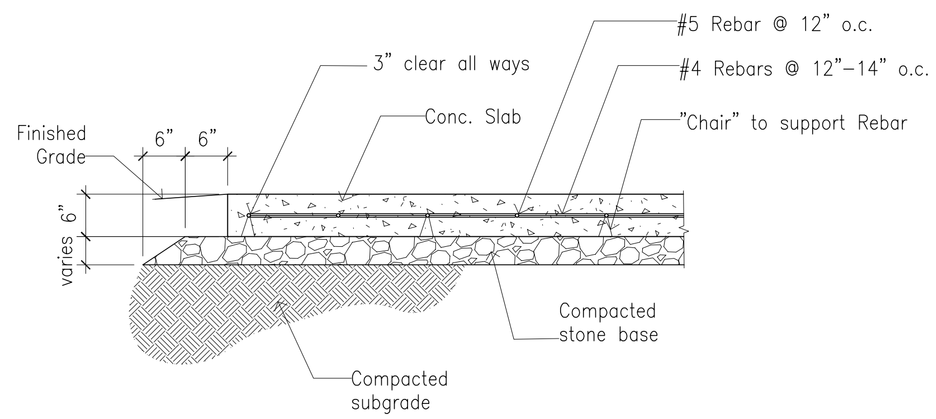

6 C3 REINFORCED CONC. SLAB SECTION

SCALE: 1/2" = 1'-0"

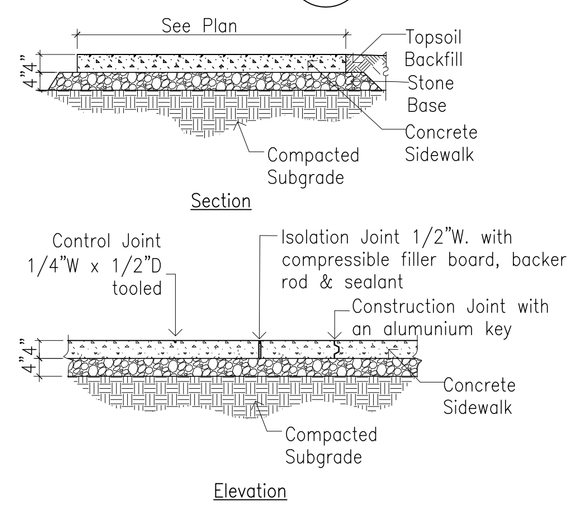

7 C3 CONC. SIDEWALK

SCALE: 1/2" = 1'-0"

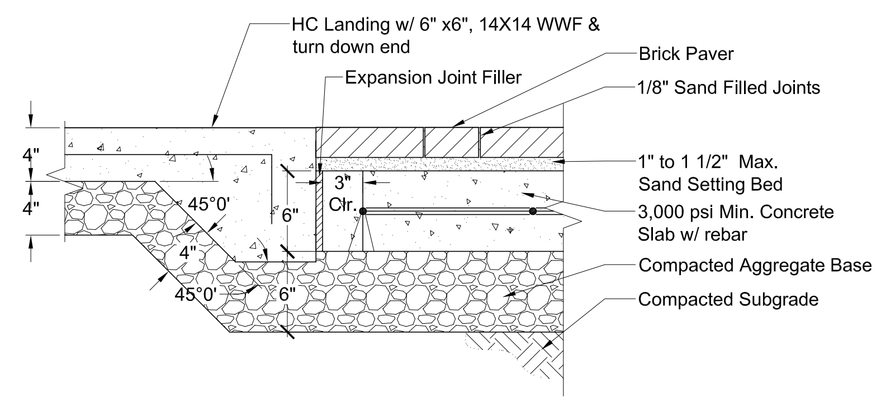

8 C3 BRICK PAVERS @ HC LANDING SECTION

NOT TO SCALE

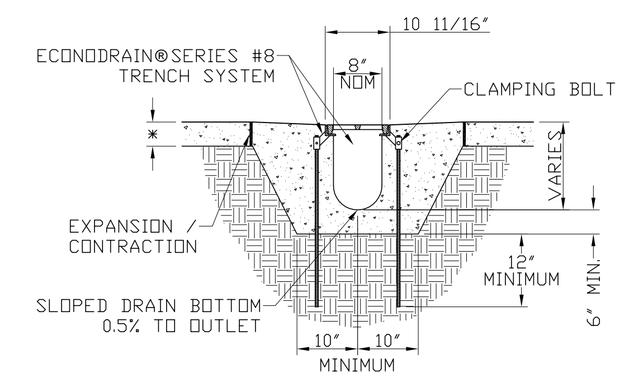

9 C3 TRENCH DRAIN MONOLITHIC POUR

NOT TO SCALE

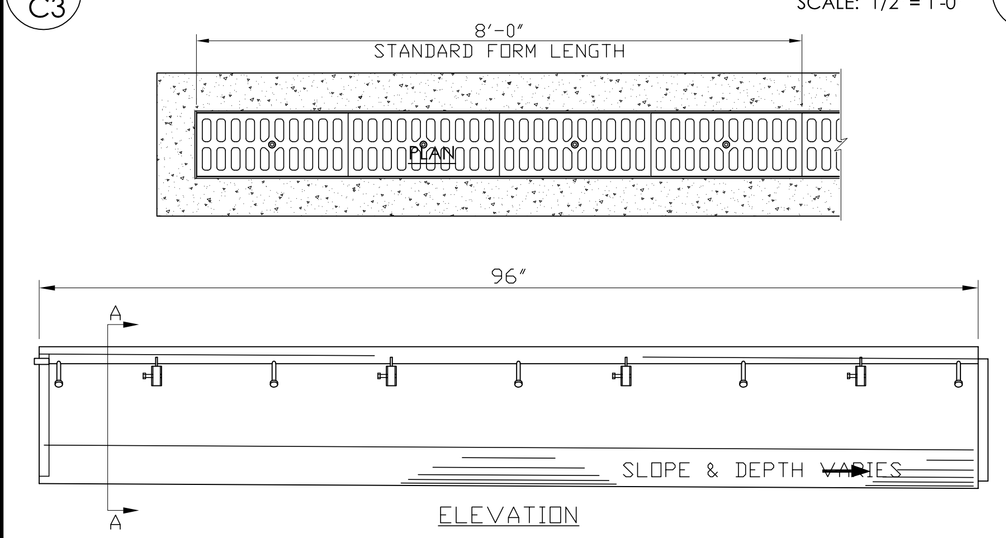

10 C3 TYP. TRENCH DRAIN ELEVATION PLAN & SECTION

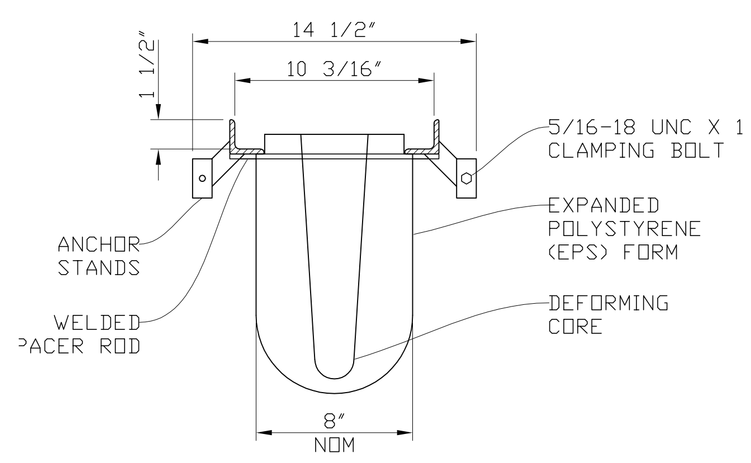

TRENCH DRAIN SECTION A

NOT TO SCALE

INTEC aec
2500 Brighton Dam Road, Brookeville, Maryland 20833
p. 301.570.4100 f. 301.570.4101 www.INTECaec.com

REV.	DESCRIPTION	DATE

ARMED FORCES RETIREMENT HOME
EAGLE GATE RENOVATION
3700 NORTH CAPITOL STREET N.W. WASHINGTON D.C 20317

DETAILS
CIVIL

DESIGNED:	PL
DRAWN:	
REVIEWED:	SK
JOB #:	210005
SCALE:	AS SHOWN
DATE:	00-00-0000

C-3

SHEET 5 OF 11