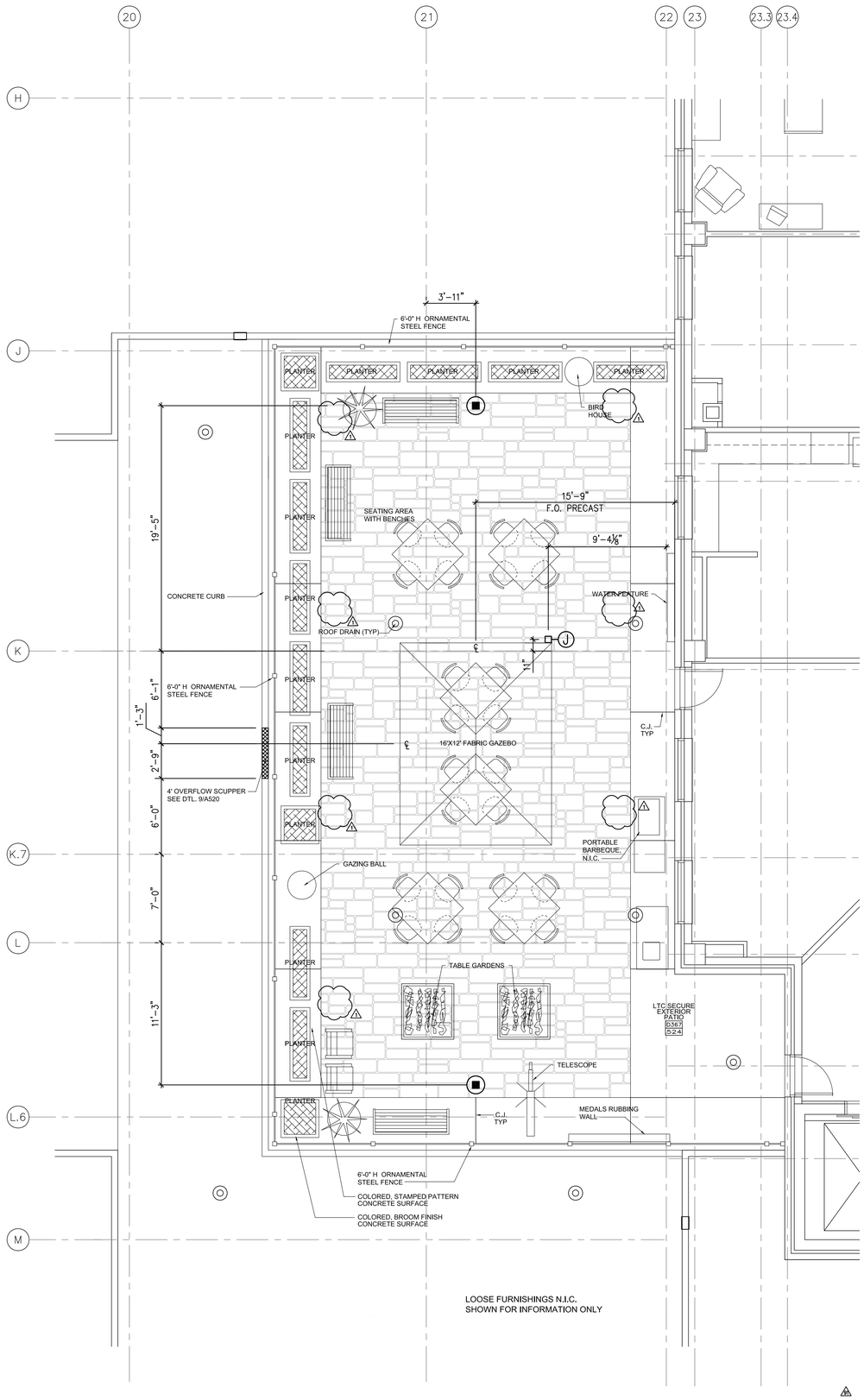

LOOSE FURNISHINGS N.I.C.
SHOWN FOR INFORMATION ONLY

2 **LEVEL 3 LTC EXTERIOR COURTYARD - PAVILION 'D'**
A1.30|A1.26 1/4"=1'-0"

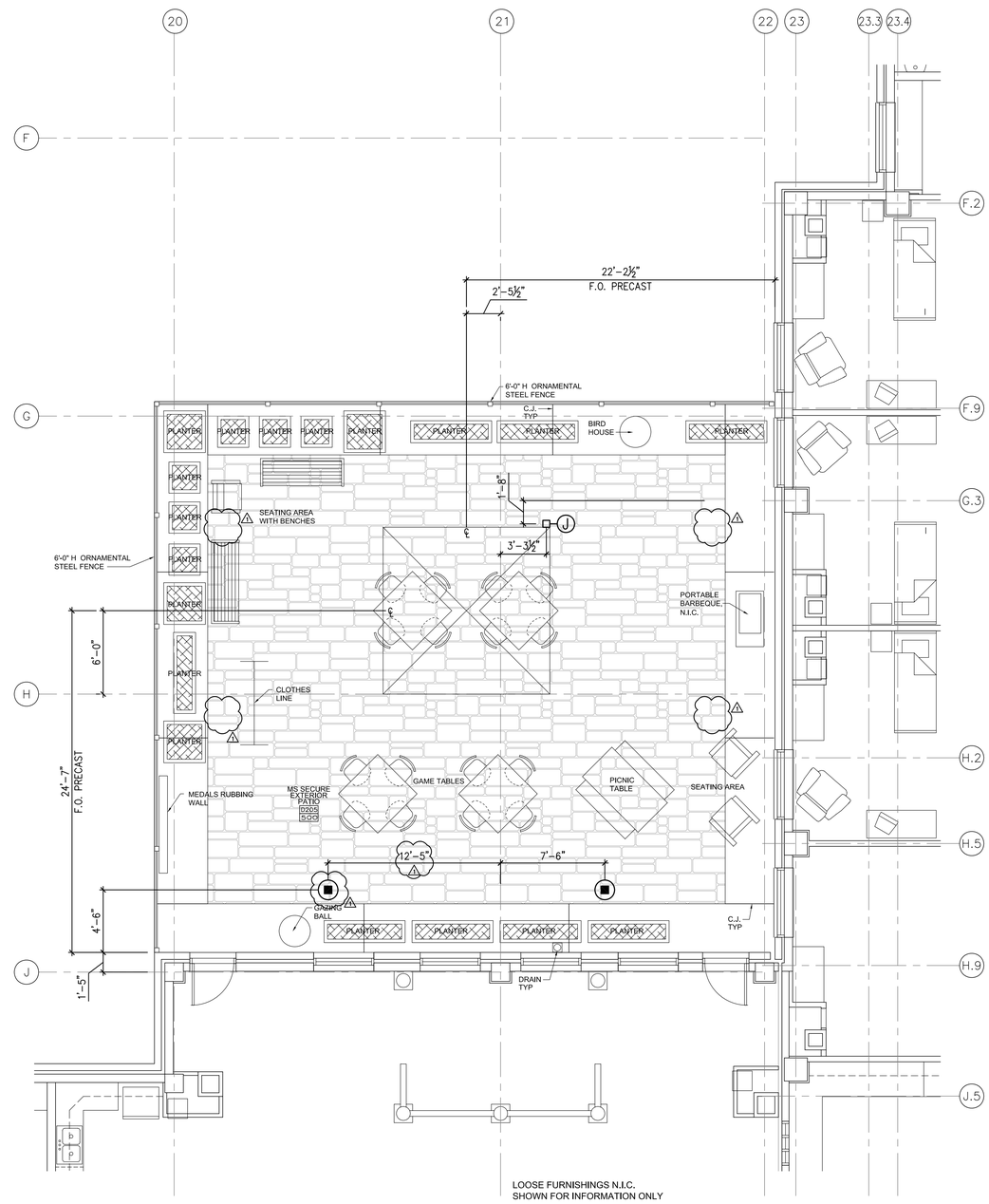

LOOSE FURNISHINGS N.I.C.
SHOWN FOR INFORMATION ONLY

1 **LEVEL 2 MS EXTERIOR COURTYARD - PAVILION 'D'**
A1.20|A1.26 1/4"=1'-0"

PLAN NORTH

PROPERTY OF THE UNITED STATES GOVERNMENT – FOR OFFICIAL USE ONLY. Do not remove this notice. Properly destroy documents when no longer needed.

GENERAL SERVICES ADMINISTRATION
77 FORSYTH STREET
SUITE 600
ATLANTA, GA 30303
TEL: (404)331-3200

AFRH The Premier Retirement Community for America's Veterans

JACOBS
PROJECT MANAGEMENT CONSULTANT TO THE GENERAL SERVICES ADMINISTRATION

YATES CONSTRUCTION

SFCS Architecture Engineering Planning Interiors

URS CORPORATION
2020 K ST, NW
SUITE 300
WASHINGTON D.C. 20006

CERTIFICATIONS

REGISTERED ARCHITECT LEWIS W ROBINSON 4288 MISSISSIPPI

12/07/2009

KEY PLAN

REVISION NOTES		
MARK	DATE	DESCRIPTION
1	12/07/09	REVISED SECURE PATIO LAYOUTS

GRAPHIC SCALE 0 2' 4' 8'

CONTRACTORS	A/E CON. NO.	GS-04P-07-EX-C-0099
	A/E TASK NO.	
	CONS. CONTR.	
	CONS. WORK	
	PRIME A/E	
	SUB A/E	
	CONSTR. CON.	
BUILDING	NAME	ARMED FORCES RETIREMENT HOME
	STREET	1800 BEACH DRIVE
	CITY/ST./ZIP	GULFPORT, MS 39507
	BUILDING NO.	
	OTHER BUILDING NOs.	
	FACILITY CODE	
PROJECT	PROJECT TITLE	ARMED FORCES RETIREMENT HOME GULFPORT, MISSISSIPPI
	PROJECT DESCRIPTION	NEW CONSTRUCTION
	PROJECT NO.	31942982
	GSA PM	STEVEN SMITH
	SUBMISSION	ISSUED FOR CONSTRUCTION
	SUB. DATE	09/08/2008
DRAWING	DRAWING TITLE	EXTERIOR PATIO LAYOUT
	FILE NAME	A-126-N0095730.dwg
	FLOOR NO.	
	DRAWN BY	BRB DATE DRAFTED:
	CHECKED BY	IL SHEET SIZE: 34 X 44
	DRAWING NO.	SD A 103 (DISCIPLINE SHEET TYPE SEQUENCE)
		SHEET ---- OF 213

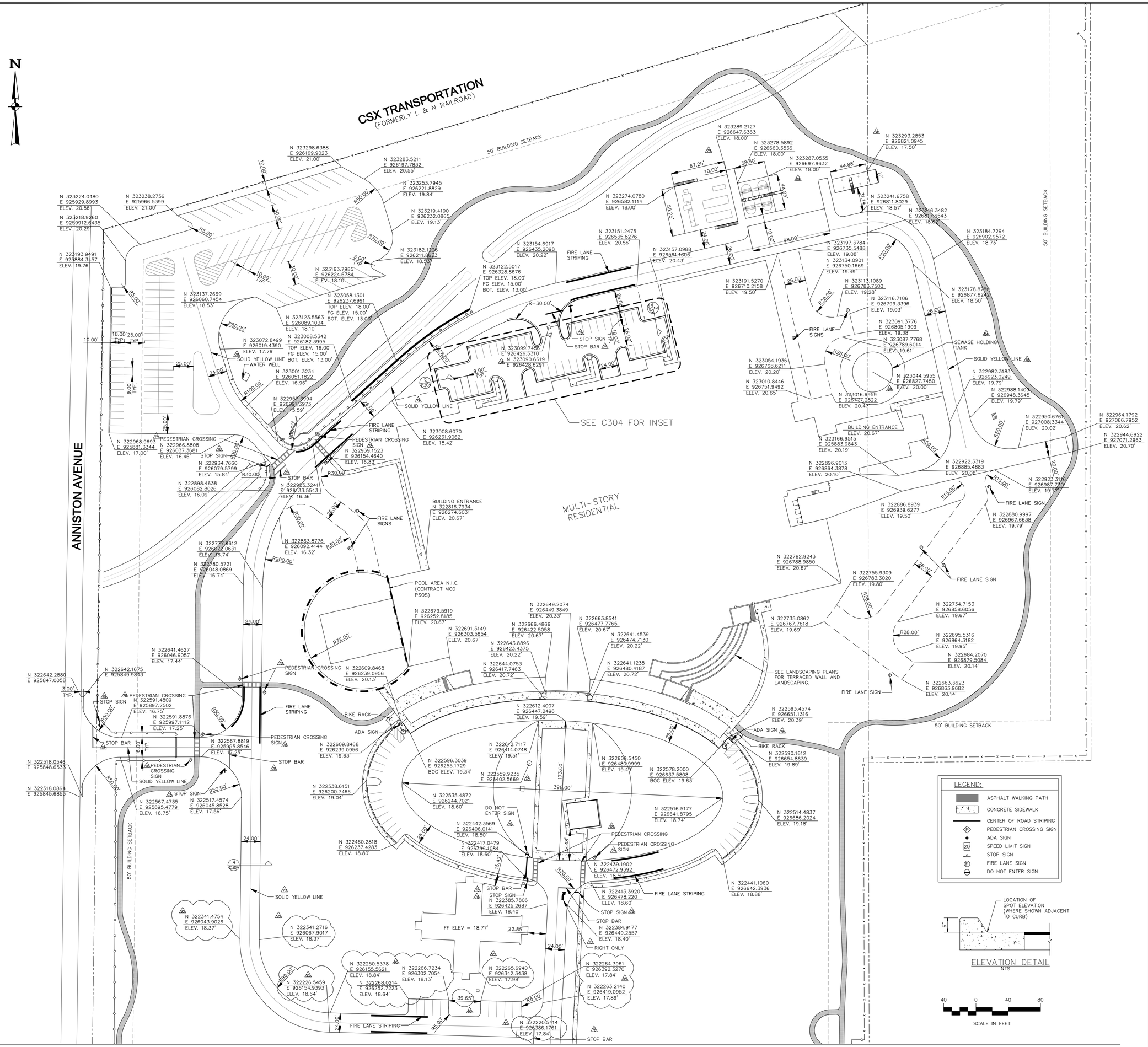

GENERAL SERVICES ADMINISTRATION
77 FORSYTH STREET
SUITE 600
ATLANTA, GA 30303
TEL: (404)331-3200

AFRH The Premier Retirement Community for America's Veterans

JACOBS
PROJECT MANAGEMENT CONSULTANT TO THE GENERAL SERVICES ADMINISTRATION

YATES CONSTRUCTION

SFCS Architecture Engineering Planning Interiors

URS CORPORATION
2020 K ST, NW
SUITE 300
WASHINGTON D.C. 20006

CERTIFICATIONS

KEY PLAN

REVISION NOTES

MARK	DATE	DESCRIPTION
A	09/08/08	ISSUED FOR CONSTRUCTION
B	12/02/08	CIVIL STRUCTURAL ARCH
C	06/04/09	ADDED SIGNAGE & DETAILS
D	08/14/09	SITE REVISIONS

GRAPHIC SCALE

CONTRACTORS

A/E CON. NO.	GS-04P-07-EX-C-0099
A/E TASK NO.	
CONS. CONTR.	
CONS. WORK	
PRIME A/E	
SUB A/E	
CONSTR. CON.	

BUILDING

NAME	ARMED FORCES RETIREMENT HOME
STREET	1800 BEACH DRIVE
CITY/ST./ZIP	GULFPORT, MS 39507
BUILDING NO.	
OTHER	
BUILDING NOs.	
FACILITY CODE	

PROJECT

PROJECT TITLE	ARMED FORCES RETIREMENT HOME GULFPORT, MISSISSIPPI
PROJECT DESCRIPTION	NEW CONSTRUCTION
PROJECT NO.	31942982
GSA PM	STEVEN SMITH
SUBMISSION	ISSUED FOR CONSTRUCTION
SUB. DATE	09/08/2008

DRAWING

DRAWING TITLE	GEOMETRIC PLAN
FILE NAME	
FLOOR NO.	
DRAWN BY	DATE DRAFTED:
CHECKED BY	SHEET SIZE: 34 X 44
DRAWING NO.	SD C 124 (DISCIPLINE SHEET TYPE SEQUENCE)
	SHEET OF

PROPERTY OF THE UNITED STATES GOVERNMENT – FOR OFFICIAL USE ONLY. Do not remove this notice. Properly destroy documents when no longer needed.

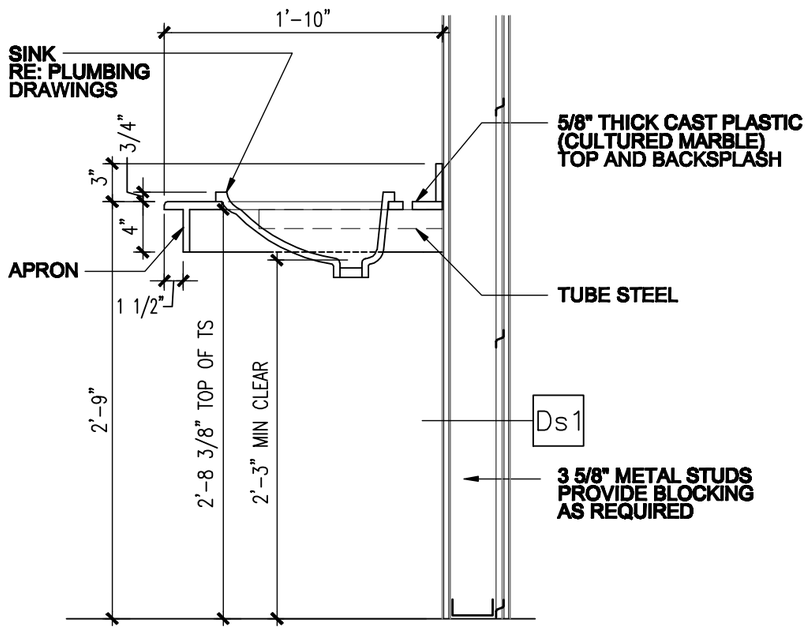

13 A4.01 A4.01 **SECTION DETAIL**
1"=1'-0"

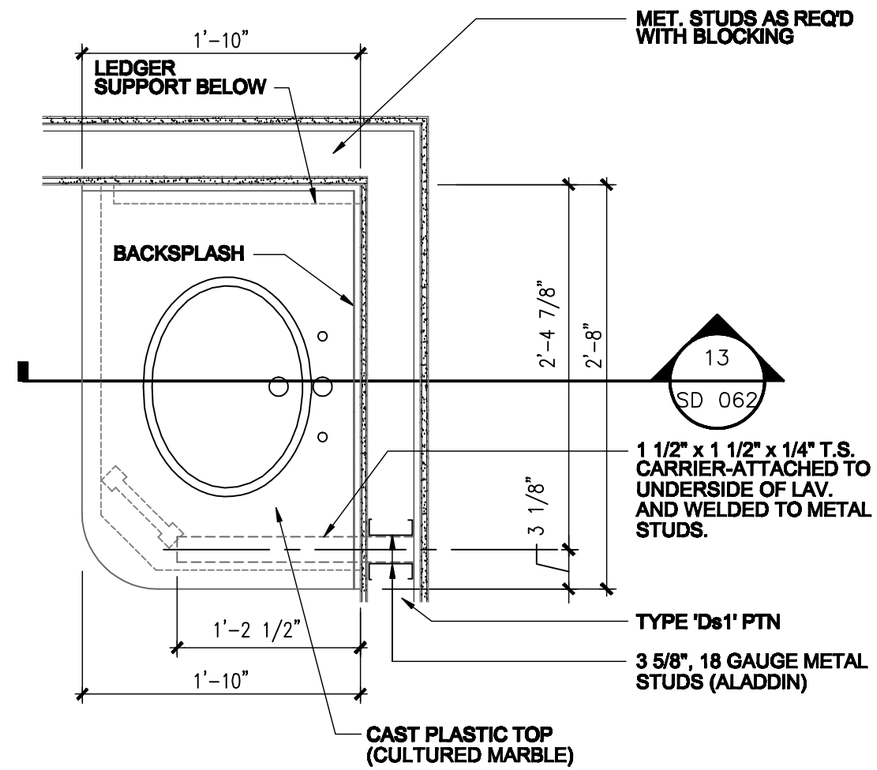

12 A4.01 A4.01 **PLAN DETAIL**
1"=1'-0"

COMMONWEALTH OF VIRGINIA
KERRY DAVID BUCK
Lic. No. 6650
ARCHITECT

PROPERTY OF THE UNITED STATES GOVERNMENT – FOR OFFICIAL USE ONLY. Do not remove this notice. Properly destroy documents when no longer needed.

GSA
GENERAL SERVICES ADMINISTRATION
77 FORSYTH STREET
SUITE 600
ATLANTA, GA 30303
TEL: (404) 331-3200

AFRH The Premier Retirement Community for America's Veterans

JE JACOBS
PROJECT MANAGEMENT CONSULTANT TO THE GENERAL SERVICES ADMINISTRATION

YATES CONSTRUCTION

SFCS Architecture Engineering Planning Interiors

URS
URS CORPORATION
2020 K ST, NW
SUITE 300
WASHINGTON D.C. 20006

KEY PLAN

REVISION NOTES

MARK	DATE	DESCRIPTION

GRAPHIC SCALE: 0 6" 1' 2'

CONTRACTORS	
A/E CON. NO.	GS-04P-07-EX-C-0099
A/E TASK NO.	
CONS. CONTR.	
CONS. WORK	
PRIME A/E	
SUB A/E	
CONSTR. CON.	

BUILDING	
NAME	ARMED FORCES RETIREMENT HOME
STREET	1800 BEACH DRIVE
CITY/ST./ZIP	GULFPORT/MS/39507
BUILDING NO.	
OTHER BUILDING NOs.	
FACILITY CODE	

PROJECT	
PROJECT TITLE	ARMED FORCES RETIREMENT HOME GULFPORT, MISSISSIPPI
PROJECT DESCRIPTION	NEW CONSTRUCTION
PROJECT NO.	31942982
GSA PM	STEVEN SMITH
SUBMISSION	
SUB. DATE	

DRAWING	
DRAWING TITLE	RESIDENTIAL LAV TUBE STEEL & STUDS REV
FILE NAME	A-401-N0095730.DWG
FLOOR NO.	
DRAWN BY	MGF DATE DRAFTED: 04/27/2009
CHECKED BY	KDB SHEET SIZE: 11 X 17
DRAWING NO.	SD A 062 (SHEET TYPE DISCIPLINE SEQUENCE)
	SHEET OF

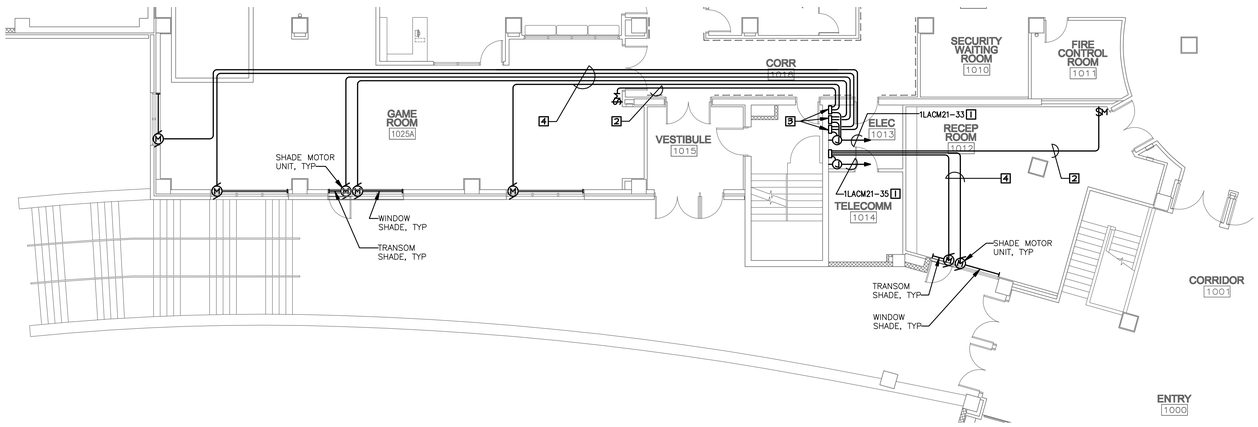

6 EP112 SD 82 **PARTIAL FIRST FLOOR PLAN - AREA 2 - POWER**
1/8"=1'-0"

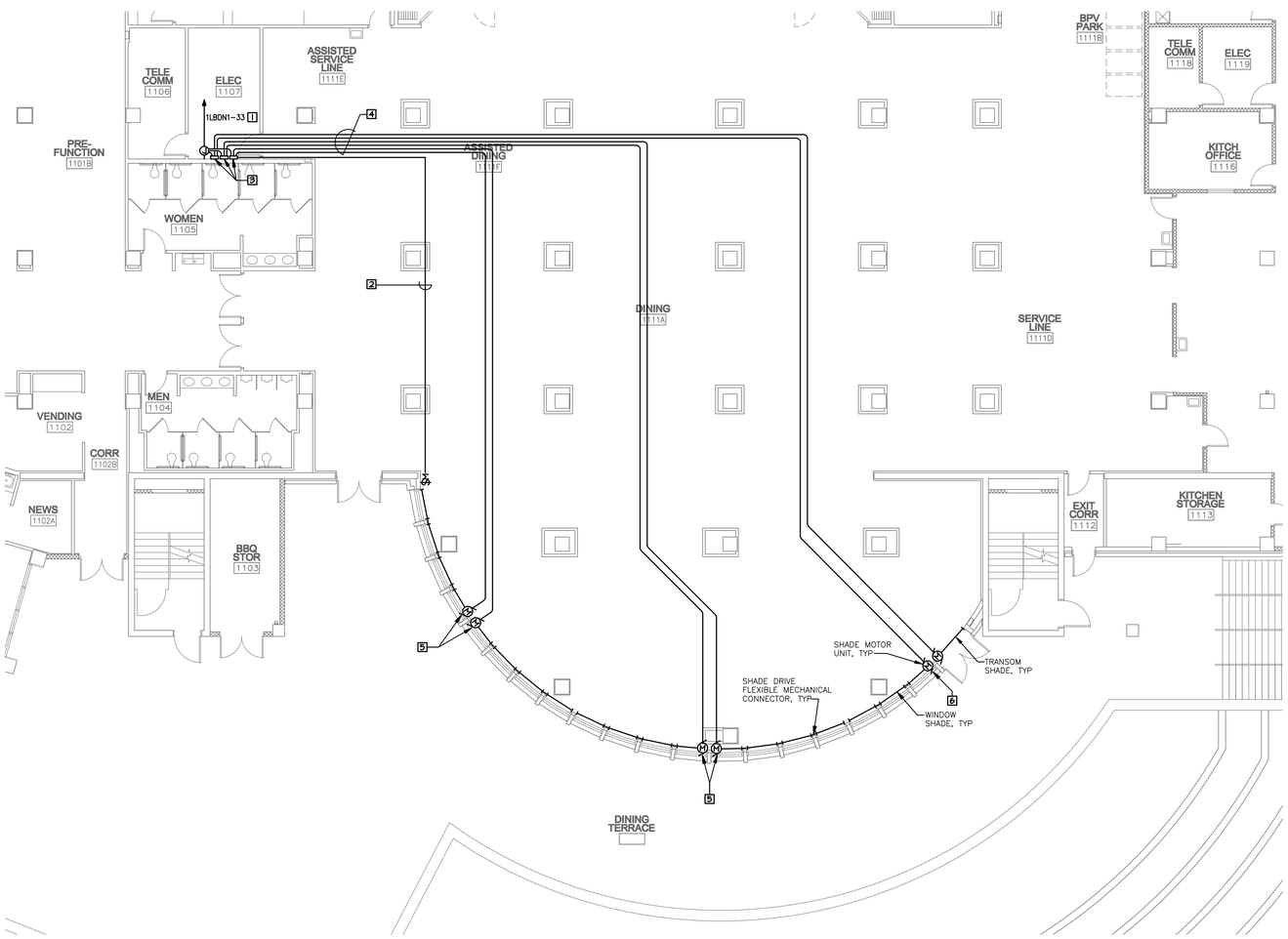

5 EP112 SD 82 **PARTIAL FIRST FLOOR PLAN - AREA 4 - POWER**
1/8"=1'-0"

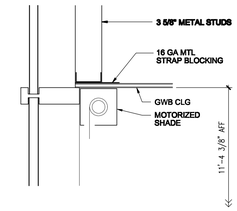

4 SD 82 **CEILING DETAIL - RECEPTION ROOM 303/ 1012**
1 1/2"=1'-0"

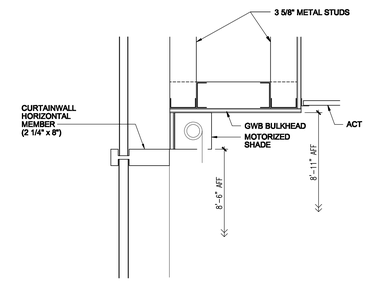

3 SD 82 **CEILING DETAIL - GAME ROOM**
1 1/2"=1'-0"

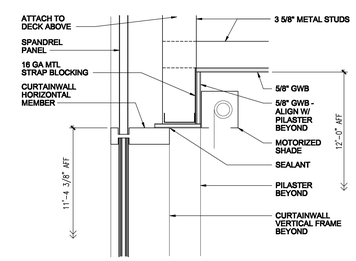

2 SD 82 **CEILING DETAIL - DINING ROOM**
1 1/2"=1'-0"

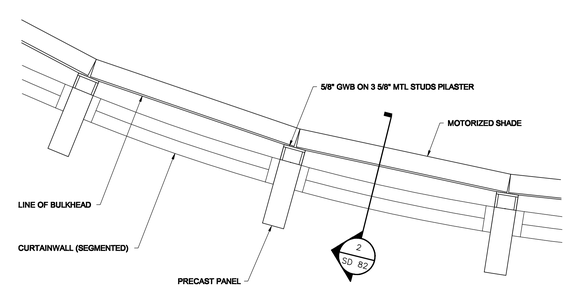

1 SD 82 **REFLECTED CEILING PLAN DETAIL - DINING ROOM**
3/4"=1'-0"

PROPERTY OF THE UNITED STATES GOVERNMENT – FOR OFFICIAL USE ONLY. Do not remove this notice. Properly destroy documents when no longer needed.

GSA
GENERAL SERVICES ADMINISTRATION
77 FORSYTH STREET
SUITE 600
ATLANTA, GA 30303
TEL: (404)331-3200

AFRH The Premier Retirement Community for America's Veterans
JE JACOBS
PROJECT MANAGEMENT CONSULTANT TO THE GENERAL SERVICES ADMINISTRATION

YATES CONSTRUCTION

SFCS Architecture Engineering Planning Interiors

URS
URS CORPORATION
2020 K ST, NW
SUITE 300
WASHINGTON D.C. 20006

GENERAL NOTES:

CODED NOTES:

1. CONNECT MC2 SHADE CONTROLLERS TO SPARE CIRCUIT BREAKER INDICATED UTILIZING (2) #12 CONDS IN 3/4" CND. DO NOT WIRE SHADE MOTORS IN PARALLEL.
2. CAT 5 CABLE IN 3/4" CND FOR COMMUNICATION BETWEEN THE LAST MC2 CONTROLLER AND THE MOMENTARY CONTACT SWITCH FOR RAISING AND LOWERING THE SHADES.
3. MC2 SHADE CONTROLLERS DAISY CHAINED TOGETHER FOR COMMUNICATION WITH CAT 5 CABLE IN 3/4" CND.
4. SHADE MOTOR POWER AND CONTROL WIRING IN 3/4" CND WITH SIZE AND NUMBER OF CONDUCTORS AS REQUIRED BY THE SHADE MANUFACTURER.
5. SHADE MOTOR CONTROL FOR (4) SHADES
6. SHADE MOTOR CONTROL FOR (3) SHADES

CERTIFICATIONS

COMMONWEALTH OF VIRGINIA
KENT DAVID BUCK
Lic. No. 0605
ARCHITECT

KEY PLAN

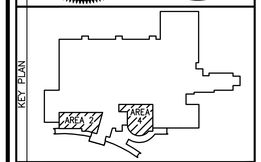

REVISION NOTES

MARK	DATE	DESCRIPTION

GRAPHIC SCALE
0 4' 8'
0 1' 2'
0 6" 1'

A/E CON. NO.	GS-04P-07-EX-C-0099
A/E TASK NO.	
CONS. CONTR.	
CONS. WORK	
PRIME A/E	
SUB A/E	
CONSTR. CON.	
NAME	ARMED FORCES RETIREMENT HOME
STREET	1800 BEACH DRIVE
CITY/ST./ZIP	GULFPORT, MS 39507
BUILDING NO.	
OTHER	
BUILDING NOs.	
FACILITY CODE	
PROJECT TITLE	ARMED FORCES RETIREMENT HOME GULFPORT, MISSISSIPPI
PROJECT DESCRIPTION	NEW CONSTRUCTION
PROJECT NO.	31942982
GSA PM	STEVEN SMITH
SUBMISSION	ISSUED FOR CONSTRUCTION
SUB. DATE	
DRAWING TITLE	PARTIAL FIRST FLOOR PLAN-AREA 2&4-PWR
FILE NAME	SD082.DWG
FLOOR NO.	FIRST FLOOR
DRAWN BY	RGW DATE DRAFTED: 06/22/2009
CHECKED BY	RGW SHEET SIZE: 34 X 44
DRAWING NO.	SD 82 (DISCIPLINE SHEET TYPE SEQUENCE)
	SHEET OF

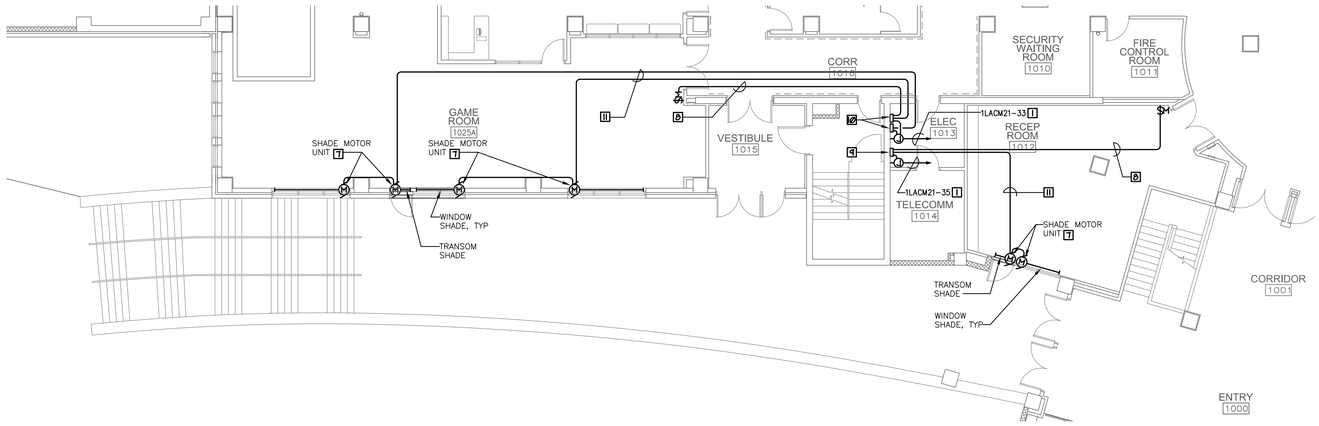

6 EP112 SD 82 **PARTIAL FIRST FLOOR PLAN - AREA 2 - POWER**
1/8"=1'-0"

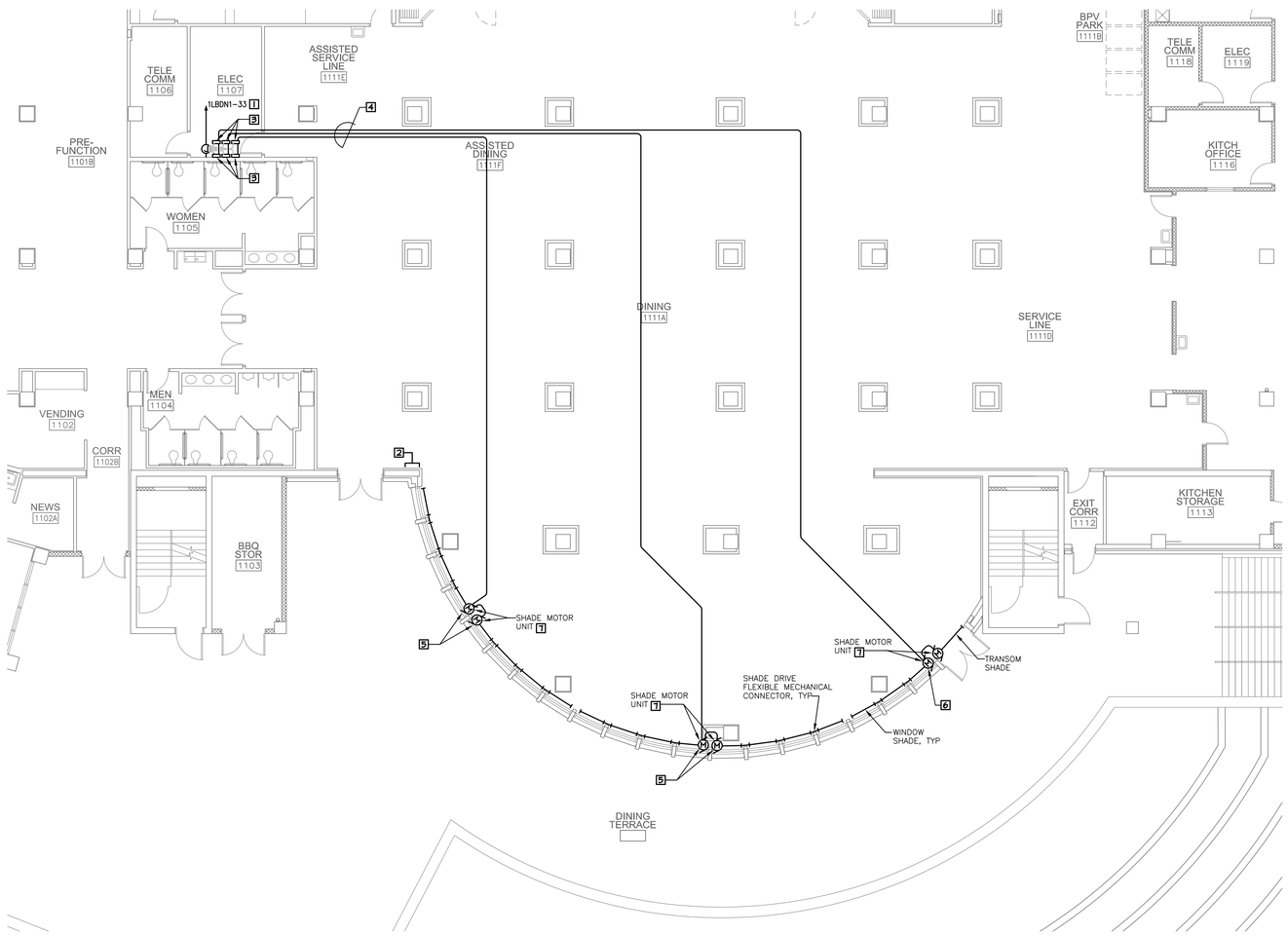

5 EP112 SD 82 **PARTIAL FIRST FLOOR PLAN - AREA 4 - POWER**
1/8"=1'-0"

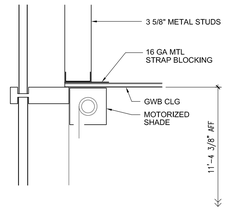

4 SD 82 **CEILING DETAIL - RECEPTION ROOM 303/ 1012**
1 1/2"=1'-0"

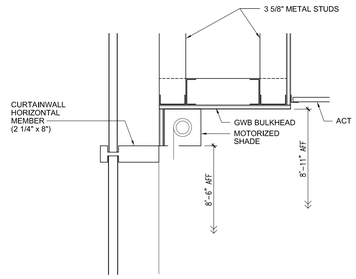

3 SD 82 **CEILING DETAIL - GAME ROOM**
1 1/2"=1'-0"

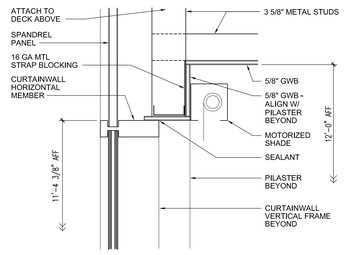

2 SD 82 **CEILING DETAIL - DINING ROOM**
1 1/2"=1'-0"

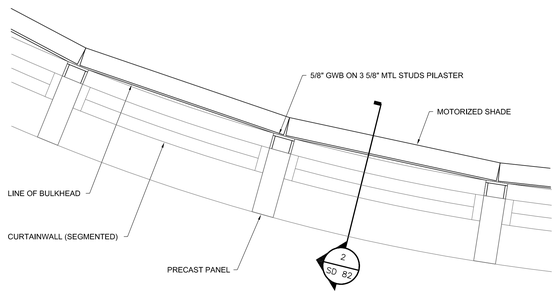

1 SD 82 **REFLECTED CEILING PLAN DETAIL - DINING ROOM**
3/4"=1'-0"

PROPERTY OF THE UNITED STATES GOVERNMENT – FOR OFFICIAL USE ONLY. Do not remove this notice. Properly destroy documents when no longer needed.

GENERAL SERVICES ADMINISTRATION
77 FORSYTH STREET
SUITE 600
ATLANTA, GA 30303
TEL: (404)331-3200

AFRH The Premier Retirement Community for America's Veterans
JACOBS
PROJECT MANAGEMENT CONSULTANT TO THE GENERAL SERVICES ADMINISTRATION

YATES CONSTRUCTION

SFCS Architecture Engineering Planning Interiors

URS CORPORATION
2020 K ST, NW
SUITE 300
WASHINGTON D.C. 20006

GENERAL NOTES:

CODED NOTES:

1. CONNECT MC2 SHADE CONTROLLER(S) TO SPARE CIRCUIT BREAKER INDICATED UTILIZING (2) #12 CONDS IN 3/4" CND. DO NOT WIRE SHADE MOTORS IN PARALLEL.
2. AT THIS LOCATION, PROVIDE (6) MOMENTARY CONTACT SWITCHES FOR RISING AND LOWERING EACH SHADE GROUP. EACH SWITCH SHALL BE CONNECTED TO A MC2 CONTROLLER IN ELEC 1107 UTILIZING A SEPARATE CAT 5 CABLE FOR COMMUNICATION. ROUTE THE (6) CAT 5 CABLES IN A SINGLE 1" CONDUIT.
3. MC2 SHADE CONTROLLERS. PROVIDE ONE CONTROLLER FOR EACH SHADE MOTOR IN THE DINING ROOM.
4. SHADE MOTOR POWER AND CONTROL WIRING IN 3/4" CND WITH SIZE AND NUMBER OF CONDUCTORS AS REQUIRED BY THE SHADE MANUFACTURER. EACH CND HAS WIRING FOR (2) SEPARATELY CONTROLLED SHADE MOTORS.
5. SHADE MOTOR SHALL RAISE AND LOWER (4) SHADES.
6. SHADE MOTOR SHALL RAISE AND LOWER (3) SHADES.
7. WHEN ORDERING THE SHADE WITH THE MOTOR UNIT, BE SURE TO SPECIFY THE SHADE WITH THE MOTOR MOUNTED IN THE LEFT END OR RIGHT END OF THE SHADE TUBE, AS SHOWN, WHEN VIEWED FROM INSIDE THE ROOM.
8. CONNECT (1) CAT 5 CABLE TO THE MC2 SHADE CONTROLLER AND EXTEND IN 3/4" CND TO THE MOMENTARY CONTACT SWITCH AND CONNECT, AS DIRECTED BY THE SHADE MANUFACTURER.
9. MC2 SHADE CONTROLLER.
10. MC2 SHADE CONTROLLERS. DAISY CHAIN THE TWO CONTROLLERS TOGETHER UTILIZING (1) CAT 5 CABLE IN 3/4" CND, AS DIRECTED BY THE SHADE MANUFACTURER.
11. SHADE MOTOR POWER AND CONTROL WIRING IN 3/4" CND WITH SIZE AND NUMBER OF CONDUCTORS AS REQUIRED BY THE SHADE MANUFACTURER. EACH CND HAS WIRING FOR (2) SHADE MOTORS.

CERTIFICATIONS

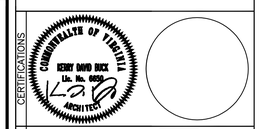

KEY PLAN

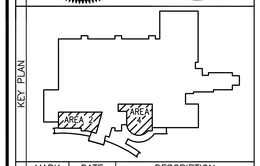

REVISION NOTES

MARK	DATE	DESCRIPTION

GRAPHIC SCALE: 0 4' 8' / 0 1' 2' / 0 6" 1'

CONTRACTORS	A/E CON. NO.	GS-04P-07-EX-C-0099
	A/E TASK NO.	
	CONS. CONTR.	
	CONS. WORK	
	PRIME A/E	
	SUB A/E	
	CONSTR. CON.	
BUILDING	NAME	ARMED FORCES RETIREMENT HOME
	STREET	1800 BEACH DRIVE
	CITY/ST./ZIP	GULFPORT, MS 39507
	BUILDING NO.	
	OTHER	
	BUILDING NOs.	
	FACILITY CODE	
PROJECT	PROJECT TITLE	ARMED FORCES RETIREMENT HOME GULFPORT, MISSISSIPPI
	PROJECT DESCRIPTION	NEW CONSTRUCTION
	PROJECT NO.	31942982
	GSA PM	STEVEN SMITH
	SUBMISSION	ISSUED FOR CONSTRUCTION
	SUB. DATE	
DRAWING	DRAWING TITLE	PARTIAL FIRST FLOOR PLAN-AREA 2&4-PWR
	FILE NAME	SD082R.DWG
	FLOOR NO.	FIRST FLOOR
	DRAWN BY	RGW DATE DRAFTED: 06/22/2009
	CHECKED BY	RGW SHEET SIZE: 34 X 44
	DRAWING NO.	SD 82R
		DISCIPLINE SHEET TYPE SEQUENCE
		SHEET OF

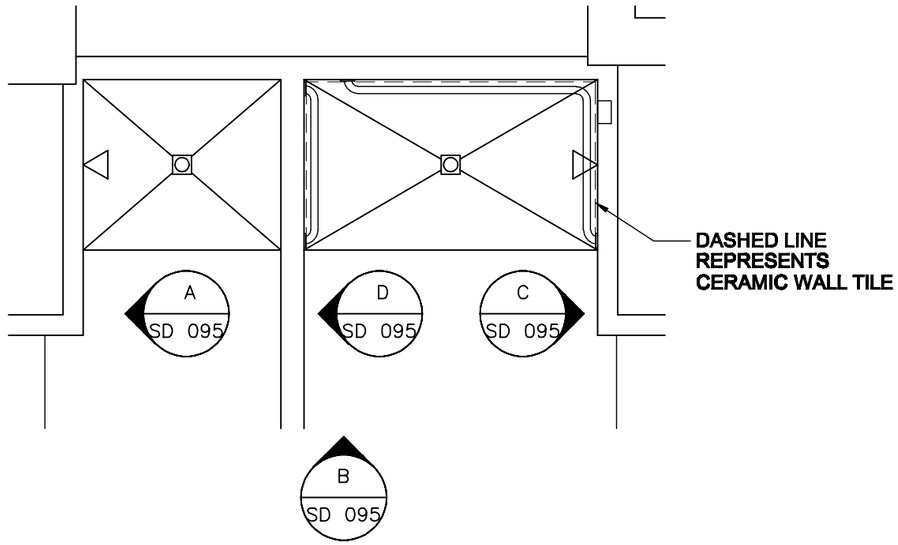

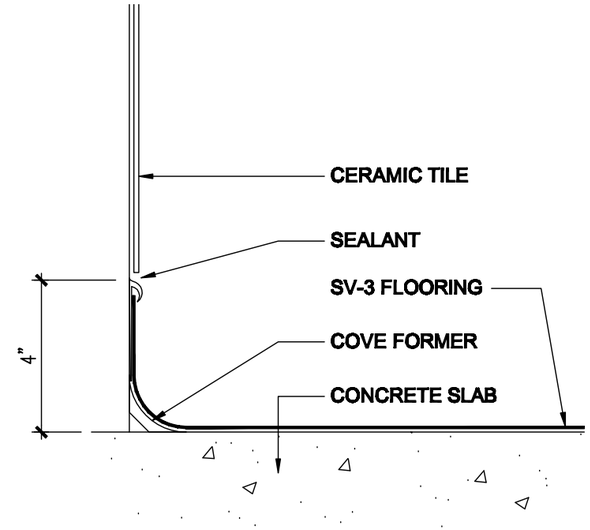

2 A4.03 SD 095 **BATHROOM WET WALL & SHOWER BASE DET** 3"=1'-0"

COMMONWEALTH OF VIRGINIA
KERRY DAVID BUCK
Lic. No. 6650
ARCHITECT

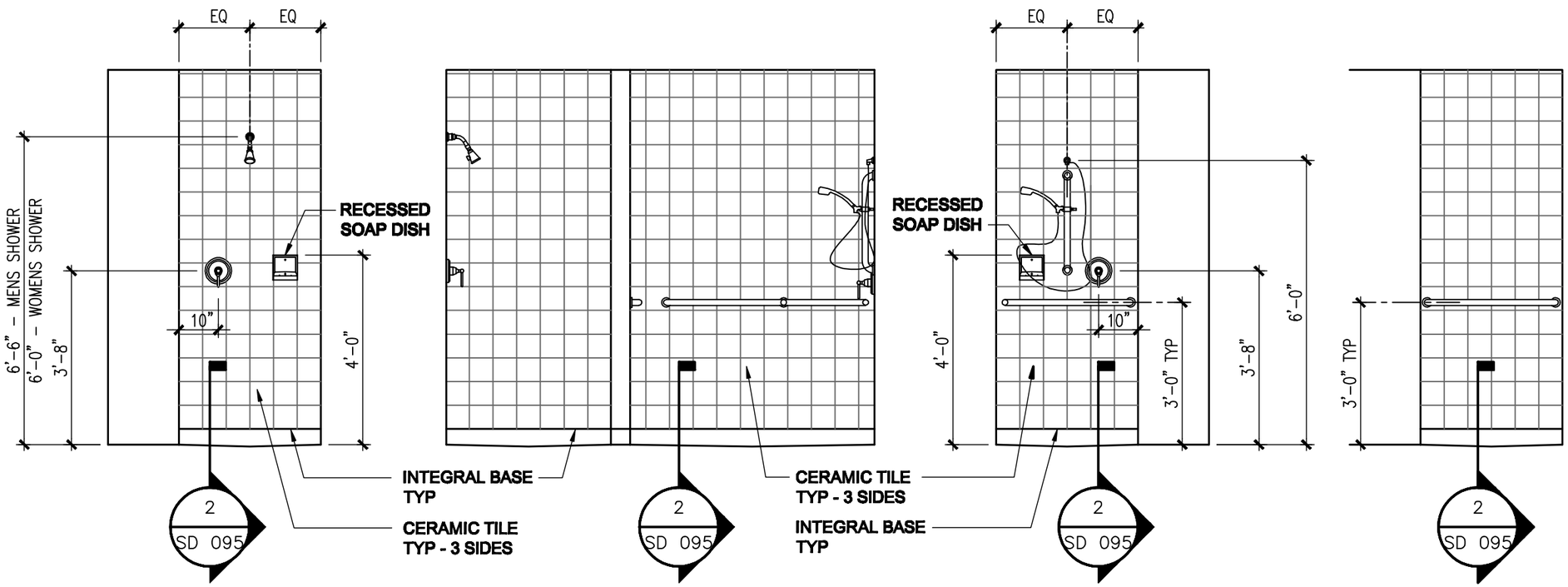

1 SD 095 A4.05 **MEN 1217A/ WOMEN 1219A SHOWER ELEVATIONS** 3/8"=1'-0"

PROPERTY OF THE UNITED STATES GOVERNMENT – FOR OFFICIAL USE ONLY. Do not remove this notice. Properly destroy documents when no longer needed.

GSA
GENERAL SERVICES ADMINISTRATION
77 FORSYTH STREET
SUITE 600
ATLANTA, GA 30303
TEL: (404) 331-3200

AFRH The Premier Retirement Community for America's Veterans

JE JACOBS
PROJECT MANAGEMENT CONSULTANT TO THE GENERAL SERVICES ADMINISTRATION

YATES CONSTRUCTION

SFCS Architecture Engineering Planning Interiors

URS
URS CORPORATION
2020 K ST, NW
SUITE 300
WASHINGTON D.C. 20006

KEY PLAN

REVISION NOTES

MARK	DATE	DESCRIPTION

GRAPHIC SCALE: 0 1' 2' 4' / 0 1.5" 3" 6"

A/E CON. NO.	GS-04P-07-EX-C-0099
A/E TASK NO.	
CONS. CONTR.	
CONS. WORK	
PRIME A/E	
SUB A/E	
CONSTR. CON.	
NAME	ARMED FORCES RETIREMENT HOME
STREET	1800 BEACH DRIVE
CITY/ST./ZIP	GULFPORT/MS/39507
BUILDING NO.	
OTHER BUILDING NOs.	
FACILITY CODE	
PROJECT TITLE	ARMED FORCES RETIREMENT HOME GULFPORT, MISSISSIPPI
PROJECT DESCRIPTION	NEW CONSTRUCTION
PROJECT NO.	31942982
GSA PM	STEVEN SMITH
SUBMISSION	
SUB. DATE	
DRAWING TITLE	DIMENSIONED SHOWER ELEVATIONS
FILE NAME	
FLOOR NO.	
DRAWN BY	MGF DATE DRAFTED: 07/07/2009
CHECKED BY	KDB SHEET SIZE: 11 X 17
DRAWING NO.	SD A 095 (SHEET TYPE DISCIPLINE SEQUENCE) SHEET OF

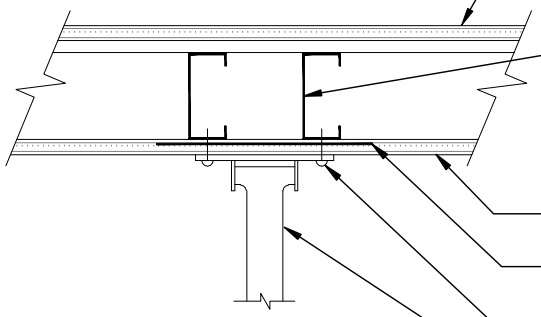

5/8" GWB ON 1/2" RESILIENT CHANNEL

3 5/8" 20 GA. MTL STUD, FULL HEIGHT FROM BOTTOM TRACK TO TOP TRACK

5/8" GWB

20 GA. STRAP BLOCKING, FROM 12" AFF TO 48" AFF

STAINLESS STEEL FASTENERS W/ WASHERS

FOLD-DOWN GRAB BAR - ATTACHED PER MANUFACTURERS INSTALLATION INSTRUCTIONS

2 FOLDING GRAB BAR MOUNTING DETAIL - ABOVE DETAIL AS INSTALLED AND APPROVED AT LTC/ MS UNIT MOCK-UP ON SITE, FEB. 19, 2009

SD 096 SD 096 1 1/2"=1'-0"

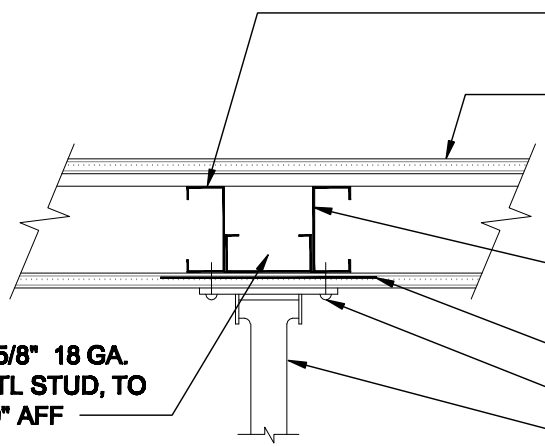

*3 5/8" 25 GA. MTL STUD (20 GA. @ CERAMIC TILE LOCATIONS)

5/8" GWB ON 1/2" RESILIENT CHANNEL @ CORRIDOR SIDE

*3 5/8" 20 GA. MTL STUD, FULL HEIGHT FROM BOTTOM TRACK TO TOP TRACK

*20 GA. STRAP BLOCKING, 60" AFF

STAINLESS STEEL FASTENERS W/ WASHERS

FOLD-DOWN GRAB BAR - ATTACHED PER MANUFACTURERS INSTALLATION INSTRUCTIONS

*3 5/8" 18 GA. MTL STUD, TO 60" AFF

*STUDS, BLOCKING TO 48" AFF @ EMERGENCY CALL BOX LOCATION

COMMONWEALTH OF VIRGINIA
KERRY DAVID BUCK
Lic. No. 6650
ARCHITECT

1 FOLDING GRAB BAR MOUNTING DETAIL - ABOVE DETAIL CAN BE USED AS DISCUSSED AND AGREED UPON ON SITE 7-10-09 IN AREAS WHERE MEP ROUGH-IN CURRENTLY INSTALLED

SD 096 SD 096 1 1/2"=1'-0"

PROPERTY OF THE UNITED STATES GOVERNMENT – FOR OFFICIAL USE ONLY. Do not remove this notice. Properly destroy documents when no longer needed.

GENERAL SERVICES ADMINISTRATION
77 FORSYTH STREET
SUITE 600
ATLANTA, GA 30303
TEL: (404) 331-3200

AFRH The Premier Retirement Community for America's Veterans

JACOBS
PROJECT MANAGEMENT CONSULTANT TO THE GENERAL SERVICES ADMINISTRATION

YATES CONSTRUCTION

SFCS Architecture Engineering Planning Interiors

URS
URS CORPORATION
2020 K ST, NW
SUITE 300
WASHINGTON D.C. 20006

KEY PLAN

REVISION NOTES

MARK	DATE	DESCRIPTION

GRAPHIC SCALE: 0 3" 6" 1'

A/E CON. NO.	GS-04P-07-EX-C-0099
A/E TASK NO.	
CONS. CONTR.	
CONS. WORK	
PRIME A/E	
SUB A/E	
CONSTR. CON.	
NAME	ARMED FORCES RETIREMENT HOME
STREET	1800 BEACH DRIVE
CITY/ST./ZIP	GULFPORT/MS/39507
BUILDING NO.	
OTHER BUILDING NOs.	
FACILITY CODE	
PROJECT TITLE	ARMED FORCES RETIREMENT HOME GULFPORT, MISSISSIPPI
PROJECT DESCRIPTION	NEW CONSTRUCTION
PROJECT NO.	31942962
GSA PM	STEVEN SMITH
SUBMISSION	
SUB. DATE	
DRAWING TITLE	FOLDING GRAB BAR MOUNTING DETAILS
FILE NAME	
FLOOR NO.	
DRAWN BY	MGF DATE DRAFTED: 07/14/2009
CHECKED BY	KDB SHEET SIZE: 8.5 X 11
DRAWING NO.	SD A 096 (SHEET TYPE / DISCIPLINE / SEQUENCE) SHEET 000 OF 000

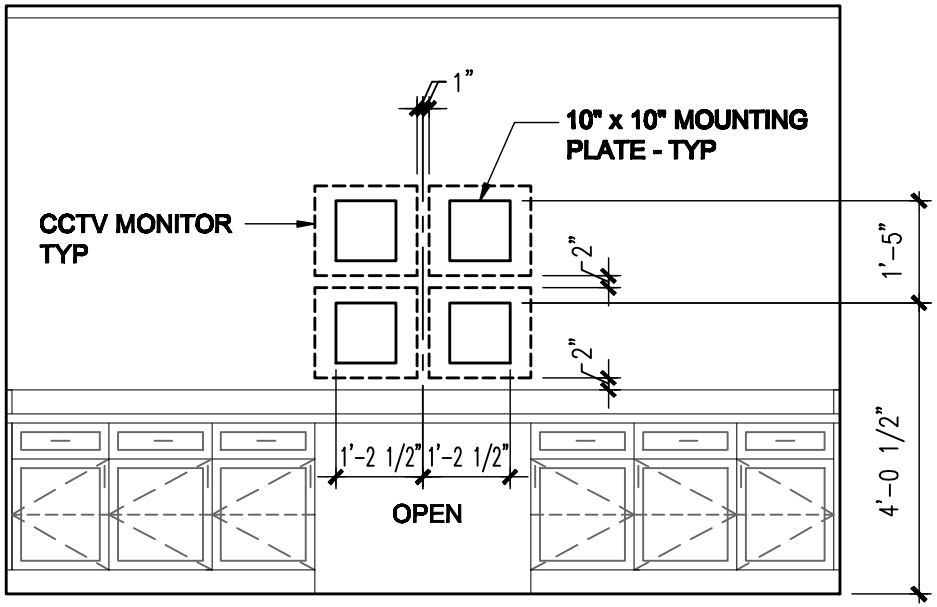

1 LOCATION FOR WALL MOUNTED CCTV MONITORS

5A4.18 SD 098 3/8"=1'-0"

COMMONWEALTH OF VIRGINIA
KERRY DAVID BUCK
Lic. No. 6650
ARCHITECT

GENERAL SERVICES ADMINISTRATION
77 FORSYTH STREET
SUITE 600
ATLANTA, GA 30303
TEL: (404) 331-3200

AFRH The Premier Retirement Community for America's Veterans

JACOBS
PROJECT MANAGEMENT CONSULTANT TO THE GENERAL SERVICES ADMINISTRATION

YATES CONSTRUCTION

SFCS Architecture Engineering Planning Interiors

URS
URS CORPORATION
2020 K ST, NW
SUITE 300
WASHINGTON D.C. 20006

KEY PLAN

REVISION NOTES

MARK	DATE	DESCRIPTION

GRAPHIC SCALE: 0 1' 2' 4'

CONTRACTORS

A/E CON. NO.	GS-04P-07-EX-C-0099
A/E TASK NO.	
CONS. CONTR.	
CONS. WORK	
PRIME A/E	
SUB A/E	
CONSTR. CON.	

BUILDING

NAME	ARMED FORCES RETIREMENT HOME
STREET	1800 BEACH DRIVE
CITY/ST./ZIP	GULFPORT/MS/39507
BUILDING NO.	
OTHER BUILDING NOs.	
FACILITY CODE	

PROJECT

PROJECT TITLE	ARMED FORCES RETIREMENT HOME GULFPORT, MISSISSIPPI
PROJECT DESCRIPTION	NEW CONSTRUCTION
PROJECT NO.	31942982
GSA PM	STEVEN SMITH
SUBMISSION	
SUB. DATE	

DRAWING

DRAWING TITLE	BLOCKING FOR WALL MOUNTED MONITORS
FILE NAME	
FLOOR NO.	
DRAWN BY	MGF — DATE DRAFTED: 07/14/2009
CHECKED BY	KDB — SHEET SIZE: 8.5 X 11
DRAWING NO.	SD A 098 (SHEET TYPE / DISCIPLINE / SEQUENCE)
	SHEET 000 OF 000

PROPERTY OF THE UNITED STATES GOVERNMENT – FOR OFFICIAL USE ONLY. Do not remove this notice. Properly destroy documents when no longer needed.

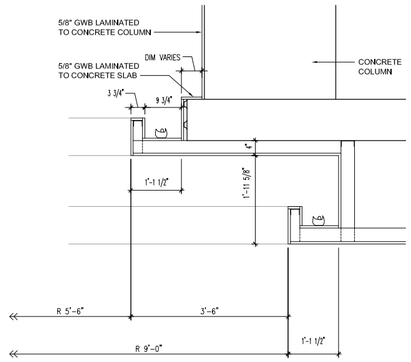

C A4.22 SD102 **MAIN LOBBY SKYLIGHT SECTION DETAIL**
3/4"=1'-0"

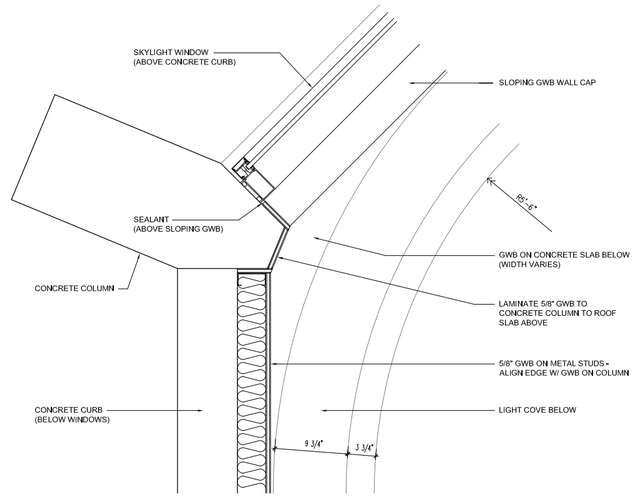

A SD102 SD102 **MAIN LOBBY SKYLIGHT PLAN DETAIL**
1 1/2"=1'-0"

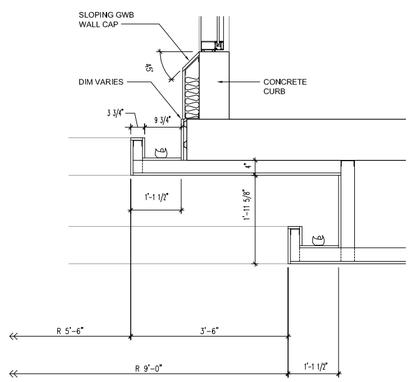

B A4.22 SD102 **MAIN LOBBY SKYLIGHT SECTION DETAIL**
3/4"=1'-0"

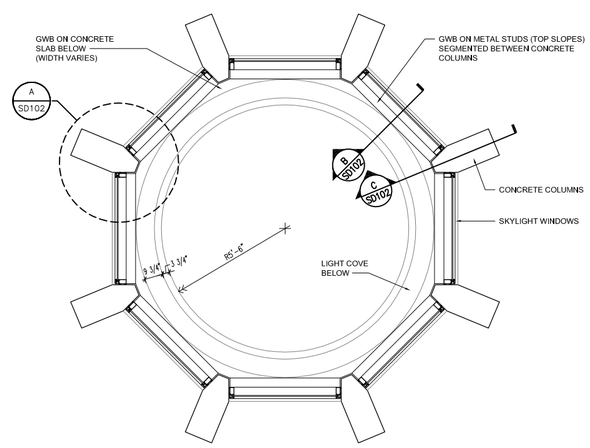

1 SD102 SD102 **MAIN LOBBY SKYLIGHT PLAN**
3/8"=1'-0"

PROPERTY OF THE UNITED STATES GOVERNMENT – FOR OFFICIAL USE ONLY. Do not remove this notice. Properly destroy documents when no longer needed.

GSA
GENERAL SERVICES ADMINISTRATION
77 FORSYTH STREET
SUITE 600
ATLANTA, GA 30303
TEL: (404)331-3200

AFRH The Premier Retirement Community for America's Veterans
JE JACOBS
PROJECT MANAGEMENT CONSULTANT TO
THE GENERAL SERVICES ADMINISTRATION

YATES CONSTRUCTION

SFCS Architecture Engineering Planning Interiors

URS
URS CORPORATION
2020 K ST, NW
SUITE 300
WASHINGTON D.C. 20006

CERTIFICATIONS

COMMONWEALTH OF VIRGINIA
KENNY DAVID BUCK
Lic. No. 0605
ARCHITECT

KEY PLAN

REVISION NOTES

MARK	DATE	DESCRIPTION

GRAPHIC SCALE
0 2' 4'
0 1' 2'
0 6" 1'

CONTRACTORS

A/E CON. NO.	GS-04P-07-EX-C-0099
A/E TASK NO.	
CONS. CONTR.	
CONS. WORK	
PRIME A/E	
SUB A/E	
CONSTR. CON.	

BUILDING

NAME	ARMED FORCES RETIREMENT HOME
STREET	1800 BEACH DRIVE
CITY/ST./ZIP	GULFPORT, MS 39507
BUILDING NO.	
OTHER	
BUILDING NOs.	
FACILITY CODE	

PROJECT

PROJECT TITLE	ARMED FORCES RETIREMENT HOME GULFPORT, MISSISSIPPI
PROJECT DESCRIPTION	NEW CONSTRUCTION
PROJECT NO.	31942982
GSA PM	STEVEN SMITH
SUBMISSION	
SUB. DATE	

DRAWING

DRAWING TITLE	MAIN LOBBY SKYLIGHT DETAIL & SECTIONS
FILE NAME	A-422-N0095730.dwg
FLOOR NO.	
DRAWN BY	MGF DATE DRAFTED: 07/22/2009
CHECKED BY	DPJ SHEET SIZE: 30 X 42
DRAWING NO.	SD A 102 (DISCIPLINE SHEET TYPE SEQUENCE)
	SHEET OF

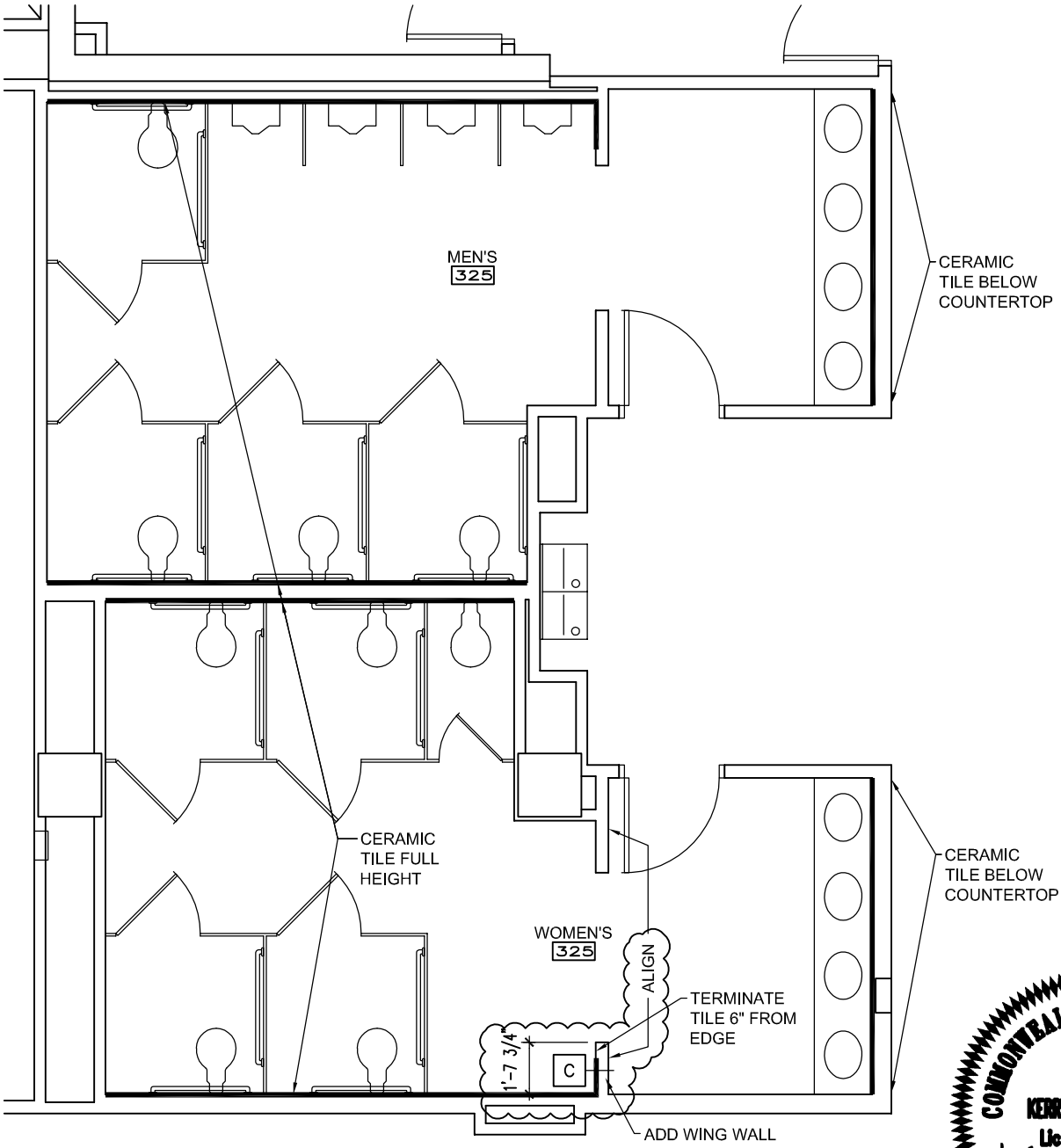

1
SD 113 A4.04

MEN 1225, 1241, 1259 / WOMEN 1224, 1240, 1261

3/16"=1'-0"

COMMONWEALTH OF VIRGINIA
KERRY DAVID BUCK
Lic. No. 6650
ARCHITECT

GENERAL SERVICES ADMINISTRATION
77 FORSYTH STREET
SUITE 600
ATLANTA, GA 30303
TEL: (404) 331-3200

AFRH The Premier Retirement Community for America's Veterans

JACOBS
PROJECT MANAGEMENT CONSULTANT TO THE GENERAL SERVICES ADMINISTRATION

YATES CONSTRUCTION

SFCS Architecture Engineering Planning Interiors

URS
URS CORPORATION
2020 K ST, NW
SUITE 300
WASHINGTON D.C. 20006

KEY PLAN

REVISION NOTES

MARK	DATE	DESCRIPTION

GRAPHIC SCALE

CONTRACTORS	
A/E CON. NO.	GS-04P-07-EX-C-0099
A/E TASK NO.	
CONS. CONTR.	
CONS. WORK	
PRIME A/E	
SUB A/E	
CONSTR. CON.	
BUILDING	
NAME	ARMED FORCES RETIREMENT HOME
STREET	1800 BEACH DRIVE
CITY/ST./ZIP	GULFPORT/MS/39507
BUILDING NO.	
OTHER BUILDING NOs.	
FACILITY CODE	
PROJECT	
PROJECT TITLE	ARMED FORCES RETIREMENT HOME GULFPORT, MISSISSIPPI
PROJECT DESCRIPTION	NEW CONSTRUCTION
PROJECT NO.	31942982
GSA PM	STEVEN SMITH
SUBMISSION	
SUB. DATE	
DRAWING	
DRAWING TITLE	CERAMIC WALL TILE FLOOR PLAN
FILE NAME	A-404-N0095730.DWG
FLOOR NO.	
DRAWN BY	CRW DATE DRAFTED: 09/16/2009
CHECKED BY	KDB SHEET SIZE: 8.5 X 11
DRAWING NO.	SD 113
SHEET TYPE DISCIPLINE SEQUENCE	SHEET 000 OF 000

PROPERTY OF THE UNITED STATES GOVERNMENT – FOR OFFICIAL USE ONLY. Do not remove this notice. Properly destroy documents when no longer needed.

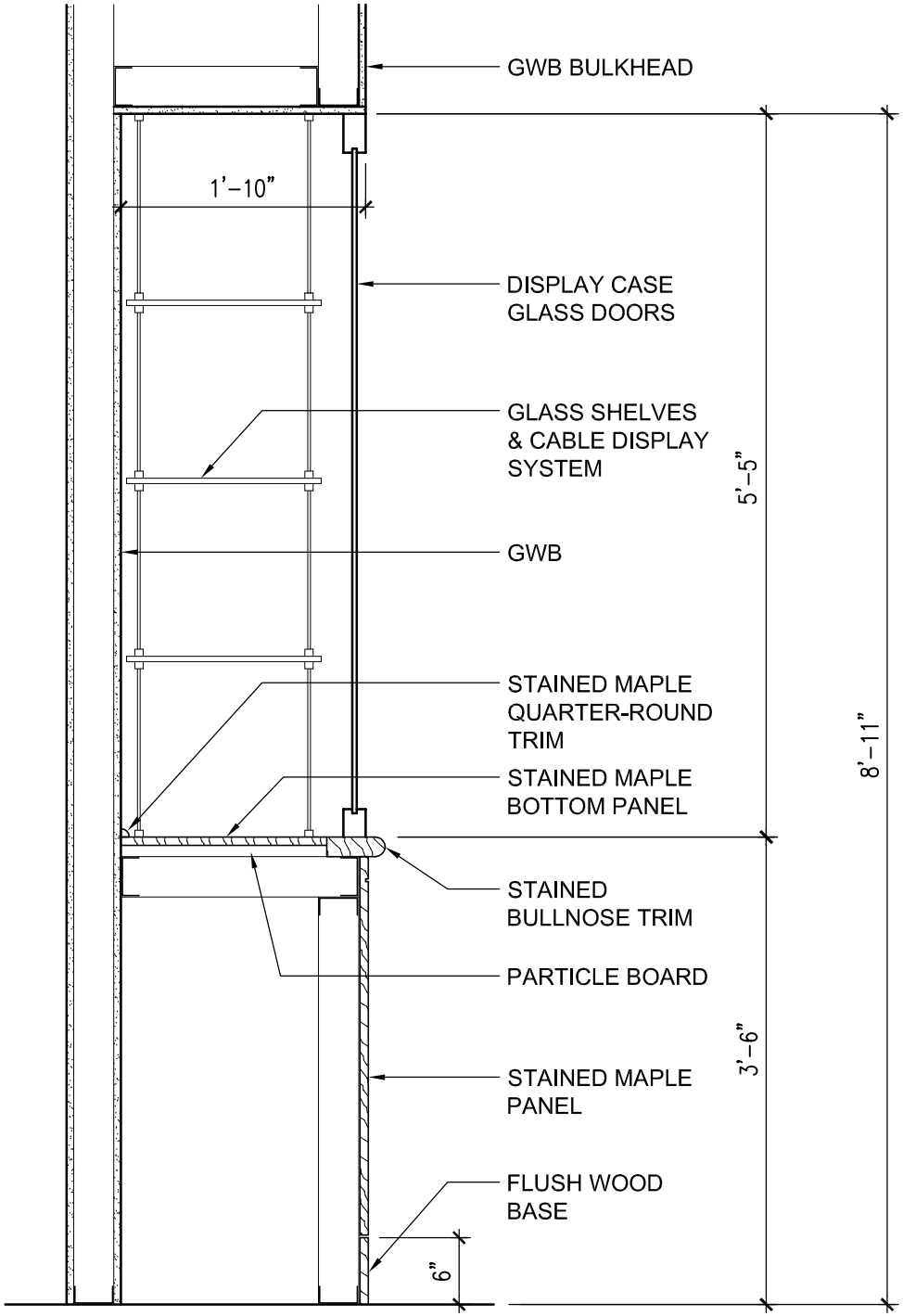

1 MEMORABILIA DISPLAY - SECTION
8A4.30 SD 121 3/4"=1'-0"
8A4.17

COMMONWEALTH OF VIRGINIA
KERRY DAVID BUCK
Lic. No. 6850
ARCHITECT

GENERAL SERVICES ADMINISTRATION
77 FORSYTH STREET
SUITE 600
ATLANTA, GA 30303
TEL: (404) 331-3200

AFRH The Premier Retirement Community for America's Veterans

JACOBS
PROJECT MANAGEMENT CONSULTANT TO THE GENERAL SERVICES ADMINISTRATION

YATES CONSTRUCTION

SFCS Architecture Engineering Planning Interiors

URS
URS CORPORATION
2020 K ST, NW
SUITE 300
WASHINGTON D.C. 20006

KEY PLAN

REVISION NOTES

MARK	DATE	DESCRIPTION

GRAPHIC SCALE
0 6" 1' 2'

CONTRACTORS

A/E CON. NO.	GS-04P-07-EX-C-0099
A/E TASK NO.	
CONS. CONTR.	
CONS. WORK	
PRIME A/E	
SUB A/E	
CONSTR. CON.	

BUILDING

NAME	ARMED FORCES RETIREMENT HOME
STREET	1800 BEACH DRIVE
CITY/ST./ZIP	GULFPORT/MS/39507
BUILDING NO.	
OTHER BUILDING NOs.	
FACILITY CODE	

PROJECT

PROJECT TITLE	ARMED FORCES RETIREMENT HOME GULFPORT, MISSISSIPPI
PROJECT DESCRIPTION	NEW CONSTRUCTION
PROJECT NO.	31942982
GSA PM	STEVEN SMITH
SUBMISSION	
SUB. DATE	

DRAWING

DRAWING TITLE	MEMORABILIA DISPLAY - SECTION
FILE NAME	A-417-N0095730.DWG
FLOOR NO.	
DRAWN BY	MGF DATE DRAFTED: 10/29/2009
CHECKED BY	KDB SHEET SIZE: 8.5 X 11
DRAWING NO.	SD A 121

SHEET TYPE DISCIPLINE SEQUENCE
SHEET 000 OF 000

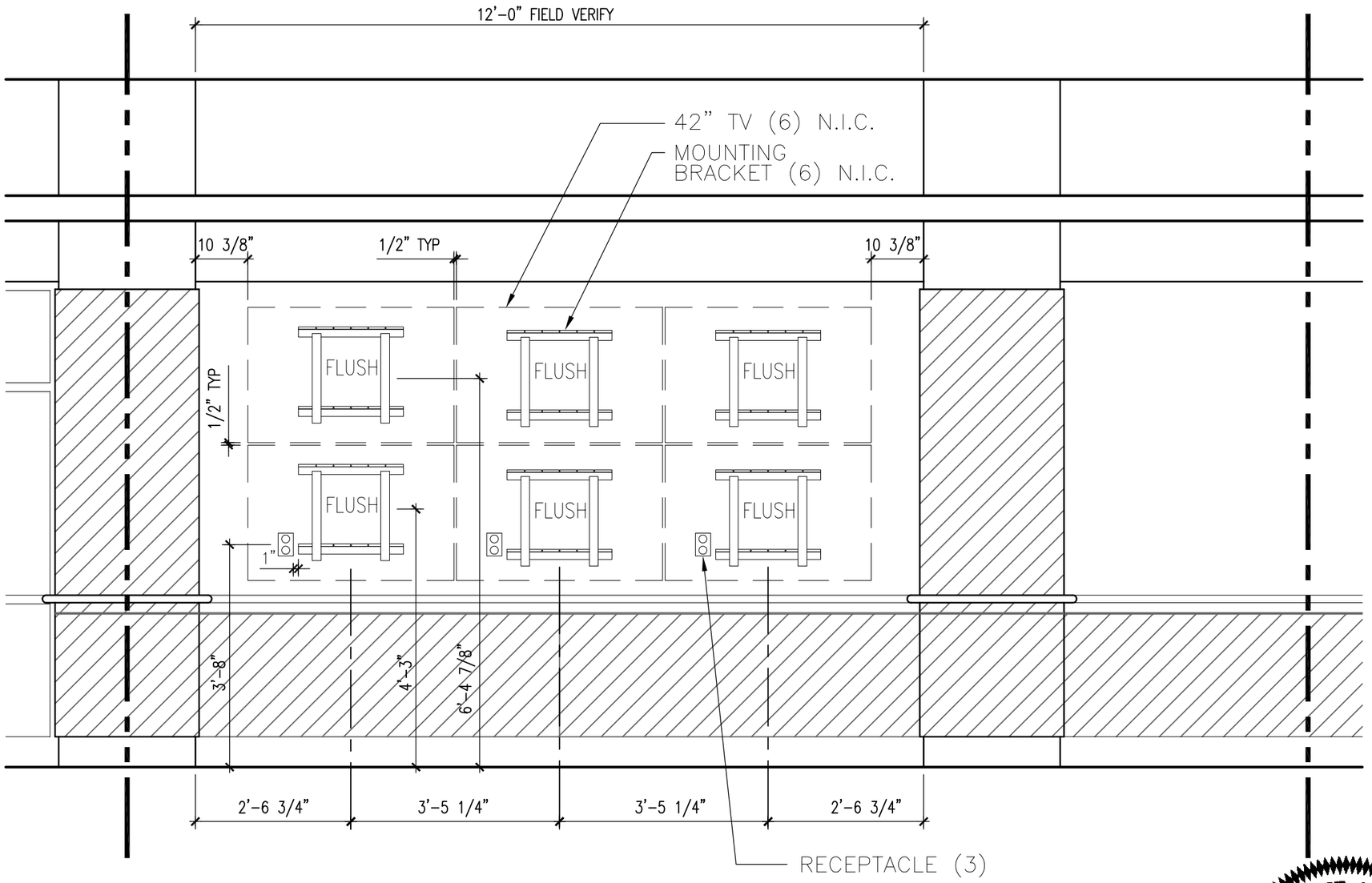

1

TV LOCATIONS MAIN STREET ELEVATION LOOKING NORTH

1/2"=1'-0"

COMMONWEALTH OF VIRGINIA
KERRY DAVID BUCK
Lic. No. 0650
ARCHITECT

PROPERTY OF THE UNITED STATES GOVERNMENT – FOR OFFICIAL USE ONLY. Do not remove this notice. Properly destroy documents when no longer needed.

GENERAL SERVICES ADMINISTRATION
77 FORSYTH STREET
SUITE 600
ATLANTA, GA 30303
TEL: (404) 331-3200

AFRH The Premier Retirement Community for America's Veterans

JACOBS
PROJECT MANAGEMENT CONSULTANT TO THE GENERAL SERVICES ADMINISTRATION

YATES CONSTRUCTION

SFCS Architecture Engineering Planning Interiors

URS
URS CORPORATION
2020 K ST, NW
SUITE 300
WASHINGTON D.C. 20006

KEY PLAN

REVISION NOTES

MARK	DATE	DESCRIPTION

GRAPHIC SCALE: 0 2' 4'

CONTRACTORS	
A/E CON. NO.	GS-04P-07-EX-C-0099
A/E TASK NO.	
CONS. CONTR.	
CONS. WORK	
PRIME A/E	
SUB A/E	
CONSTR. CON.	
BUILDING	
NAME	ARMED FORCES RETIREMENT HOME
STREET	1800 BEACH DRIVE
CITY/ST./ZIP	GULFPORT/MS/39507
BUILDING NO.	
OTHER BUILDING NOs.	
FACILITY CODE	
PROJECT	
PROJECT TITLE	ARMED FORCES RETIREMENT HOME GULFPORT, MISSISSIPPI
PROJECT DESCRIPTION	NEW CONSTRUCTION
PROJECT NO.	31942982
GSA PM	STEVEN SMITH
SUBMISSION	
SUB. DATE	
DRAWING	
DRAWING TITLE	CABLE TV LOCATIONS
FILE NAME	
FLOOR NO.	
DRAWN BY	JS DATE DRAFTED: 11/02/2009
CHECKED BY	KDB SHEET SIZE: 11 X 17
DRAWING NO.	SD A 122 (SHEET TYPE DISCIPLINE SEQUENCE)
	SHEET OF