YATES
CONSTRUCTION
115 MAIN ST BILOXI, MS 39530
228-374-6011 - PHONE 228-435-5287 - FAX

# LETTER OF TRANSMITTAL

**DATE SENT:** 05/22/09

**DATE DUE:**

**PROJECT:** 53732-: ARMED FORCES RET HOME; GPT, MS

**TRANSMITTAL NO:** 1158

***Transmitted To:***

Richard Fisher
Jacobs
126 Anniston Ave
Gulfport, MS 39507
228-604-3976
228-604-2201

***Subject: Issued for Field Use - Generator platform***

***Notes:*** Issued for Field Use - Generator platform Which includes the following
R1 & R2

| Document Type | Document | Copies Sent | Status | Remarks / Comments |
|---|---|---|---|---|
| | : Issued for Field Use - Generator platform | 1 | | |

**SIGNED:**

CAM ROBERDS

Leland Creel - ATC Associates Inc.,
Lawrence Ramsey - ATC Associates Inc.,
Brian Parker - CECO CONCRETE CONSTRUCTION LLC,
Terry Dupont - CECO CONCRETE CONSTRUCTION LLC,
Michael Harris - EDWARDS ELECTRIC SERVICE, LLC,
Jerry Crump - INTEGRATED PRO SERVICES LLC,
Howard Rice - W.G. Yates & Sons Construction Company,
David Probst - W.G. Yates & Sons Construction Company,
Michelle Rice - W.G. Yates & Sons Construction Company,
Cam Roberds - W.G. Yates & Sons Construction Company,
Casey McGinnis - W.G. Yates & Sons Construction Company,
Jobsite File - AFRH - W.G. Yates & Sons Construction Company,

YATES
CONSTRUCTION
115 MAIN ST BILOXI, MS 39530
228-374-6011 - PHONE 228-435-5287 - FAX

# LETTER OF TRANSMITTAL

**DATE SENT:** 05/22/09

**DATE DUE:**

**PROJECT:** 53732-: ARMED FORCES RET HOME; GPT, MS

**TRANSMITTAL NO:** 1158

***Transmitted To:***

Richard Fisher
Jacobs
126 Anniston Ave
Gulfport, MS 39507
228-604-3976
228-604-2201

***Subject: Issued for Field Use - Generator platform***

MATT JOHNSON - W.G. Yates & Sons Construction Company,
BOBBY YOUNG - W.G. Yates & Sons Construction Company,
Scott Brown - W.G. Yates & Sons Construction Company,
TOM TMIGUES - W.G. Yates & Sons Construction Company,
LEO McANELLY - W.G. Yates & Sons Construction Company,
FRANK BROUSSARD - W.G. Yates & Sons Construction Company,
DERRIN LAIRD - W.G. Yates & Sons & Construction Company,
JAMES PRINCE – YATES
GREG PASS – YATES
JASON MURRAY - YATES

## ACCESSORIES

800 L.F. 3/4" SLAB RUNNERS (ALL PLASTIC)

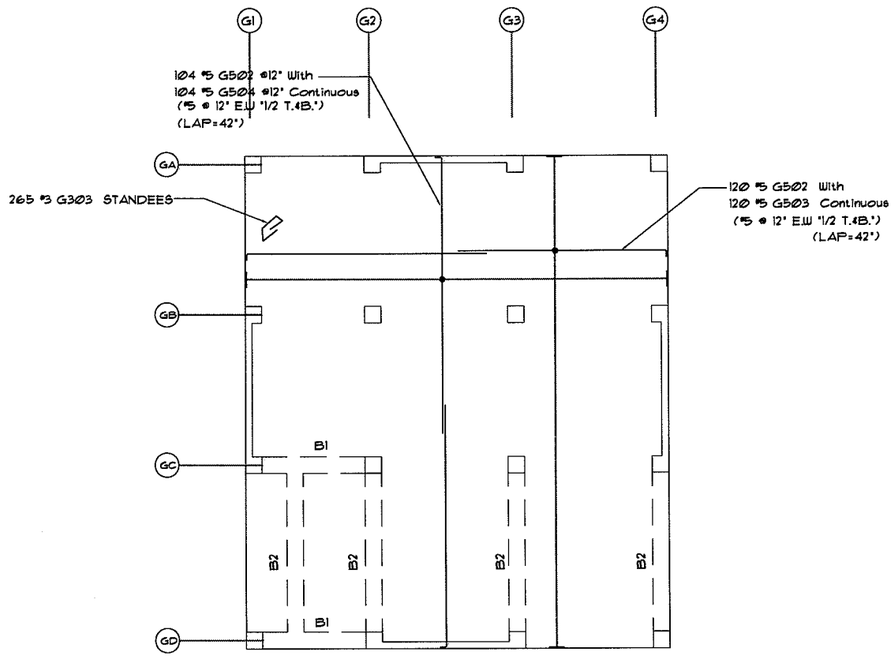


## GENERATOR PLATFORM PLAN

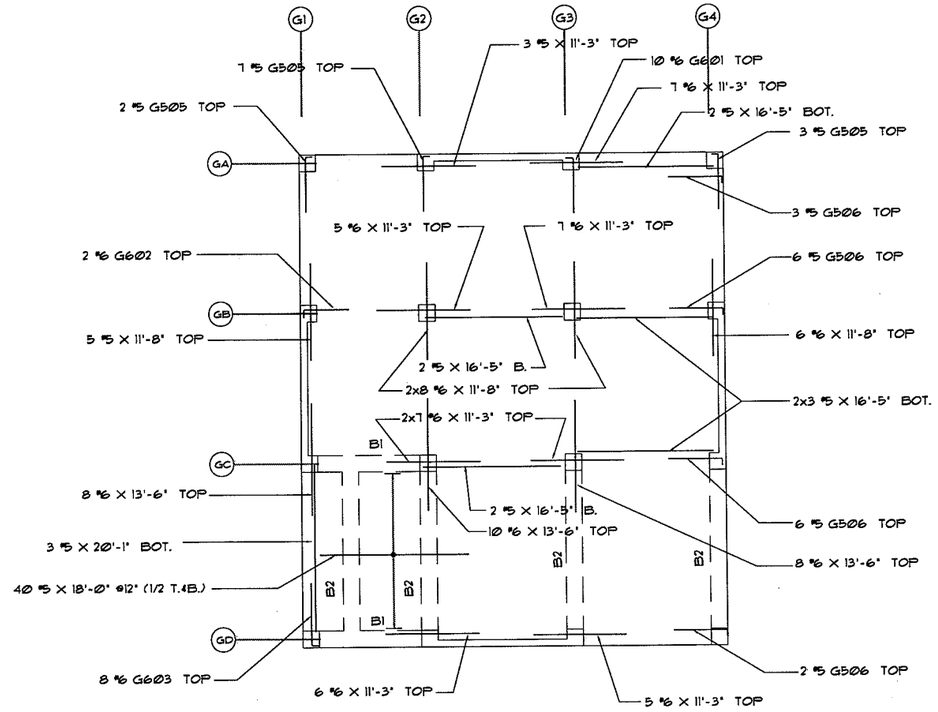


## GENERATOR PLATFORM PLAN

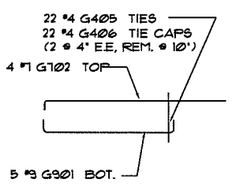


## BEAM B-1

(2-REQ'D)

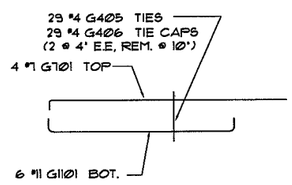


## BEAM B-2

(4-REQ'D)

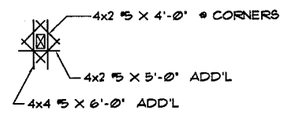


## ADD'L @ OPENINGS

(11-REQD)

**FIELD USE**

Release Code: *UNTITLED — BENDING DETAILS.

| Bar Mark | Qty | Size | Total length | Type | 'A' | 'B' | 'C' | 'D' | 'E' | 'F' | 'G' | 'H' | 'J' | 'K' | 'O' | 'R' |
|---|---|---|---|---|---|---|---|---|---|---|---|---|---|---|---|---|
| G301 | | #3 | 7'8" | T2 | 4" | 1'9" | 1'9" | 1'9" | 1'9" | | 4" | | | | | |
| G302 | | #3 | 2'5" | T9 | 4" | 1'9" | | | | | 4" | | | | | |
| G401 | | #4 | 54'8½" | 25 | | 1'4" | 8¾" | 1'4" | 8¾" | 1'4" | | 8¾" | | 4" | | |
| G402 | | #4 | 5'7" | 25 | | 1'4" | 9½" | 1'4" | 9½" | 1'4" | | 9½" | | 4¾" | | |
| G403 | | #4 | 5'11" | 11 | 4½" | 1'8" | 1'1" | 1'8" | 1'1" | | 4½" | | | | | |
| G501 | | #5 | 5'5" | T2 | 90° | 4'7" | | | | | | | | | | |
| G801 | | #8 | 6'5" | T2 | 1'4" | 5'1" | | | | | | | | | | |
| G303 | | #3 | 5'1½" | 25 | | 1'4" | 6¾" | 1'4" | 6¾" | 1'4" | | 6¾" | | 3¾" | | |
| G404 | | #4 | 4'1" | T7 | | 2' | 2' | | | | | | | | | |
| G405 | | #4 | 5'10" | S3 | 4½" | 1'8" | 1'9" | 1'8" | | | 4½" | 3" | | | | |
| G406 | | #4 | 2'6" | T9 | 4½" | 1'9" | | | | | 4½" | | | | | |
| G502 | | #5 | 38' | T2 | 90° | 29'2" | | | | | | | | | | |
| G503 | | #5 | 26'1" | T2 | 90° | 25'3" | | | | | | | | | | |
| G504 | | #5 | 34'1" | T2 | 90° | 33'3" | | | | | | | | | | |
| G505 | | #5 | 7'6" | T2 | 90° | 6'8" | | | | | | | | | | |
| G506 | | #5 | 7'4" | T2 | 90° | 6'6" | | | | | | | | | | |
| G601 | | #6 | 7'8" | T2 | T | 6'8" | | | | | | | | | | |
| G602 | | #6 | 6'7" | T2 | T | 5'7" | | | | | | | | | | |
| G603 | | #6 | 8'7" | T2 | T | 7'7" | | | | | | | | | | |
| G701 | | #7 | 29'10" | T2 | 1'2" | 28'8" | | | | | | | | | | |
| G702 | | #7 | 23'2" | T2 | 1'2" | 22' | | | | | | | | | | |
| G802 | | #8 | 5'10" | T2 | 1'4" | 4'6" | | | | | | | | | | |
| G901 | | #9 | 19'1" | T2 | 1'7" | 15'11" | | | | | 1'7" | | | | | |
| G1101 | | #11 | 25'11" | T2 | 1'8" | 22'7" | | | | | 1'8" | | | | | |

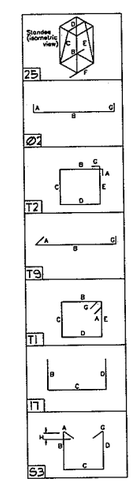


NOTE - IMPORTANT - NOTE

WE WILL NOT ACCEPT BACK CHARGES FOR LABOR, MATERIALS OR CORRECTIVE WORK UNLESS AUTHORIZED IN WRITING BY OUR OFFICE

REVISIONS

| | |
|---|---|
| 5-21-09 | APPROVED FOR FIELD USE |

CONTRACTOR: INTEGRATED PRO SERVICES

ARCHITECT: SFCS

DRAWN BY: CHECKED BY: MER

PROJECT: ARMED FORCES RETIREMENT HOME

LOCATION: GULFPORT, MS.

MATERIAL FOR: GENERATOR PLATFORM


ELLIS STEEL COMPANY, INC.
P.O. Box 642
Office: Brandon, Mississippi 38654
662/893-5955


JOB NO. 9056

DRAWING NO. R2

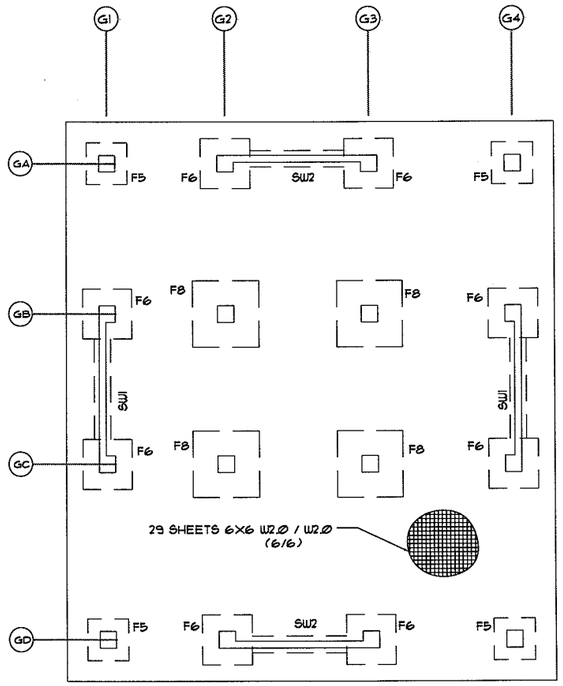


FOUNDATION PLAN

| FOOTING SCHEDULE | | | |
|---|---|---|---|
| QTY. | MARK | SIZE | REINFORCING |
| 4 | F5.0 | 5-0 X 5-0 X 1-4 | 24 #5 X 4'-6" (1/2 E.W.X1/2 T.&B.)<br>4 #4 G40.1 STANDEES |
| 8 | F6.0 | 6-0 X 6-0 X 1-4 | 28 #5 X 5'-6" (1/2 E.W.X1/2 T.&B.)<br>4 #4 G40.1 STANDEES |
| 4 | F8.0 | 8-0 X 8-0 X 1-6 | 28 #6 X 7'-6" (1/2 E.W.X1/2 T.&B.)<br>4 #4 G40.2 STANDEES |

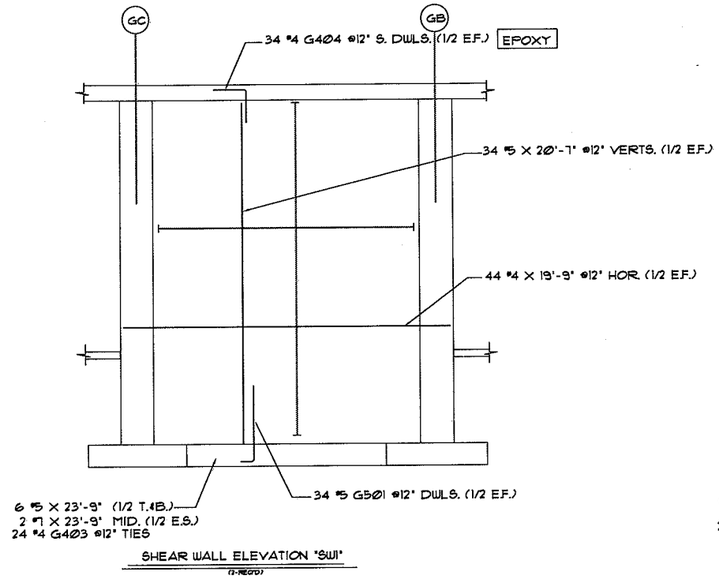


SHEAR WALL ELEVATION "SW1"
(1-REQ'D)

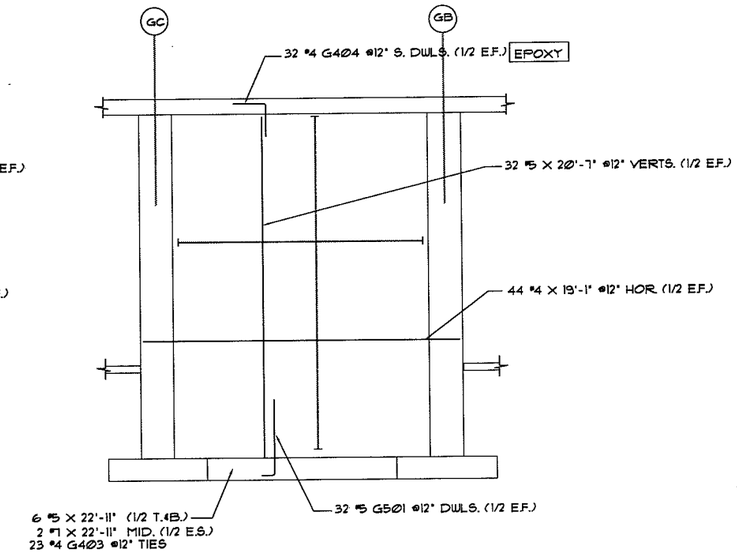


SHEAR WALL ELEVATION "SW2"
(1-REQ'D)

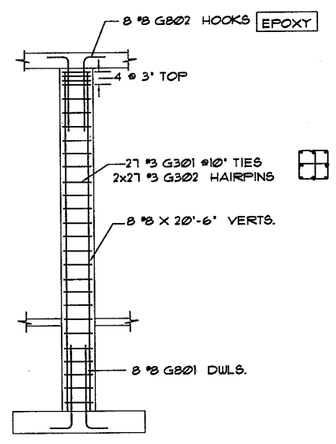


TYP. COLUMN ELEVATION
(16-REQ'D)

FIELD USE

NOTE - IMPORTANT - NOTE

WE WILL NOT ACCEPT BACK CHARGES FOR LABOR, MATERIALS OR CORRECTIVE WORK UNLESS AUTHORIZED IN WRITING BY OUR OFFICE

REVISIONS

| | |
|---|---|
| 5-21-09 | APPROVED FOR FIELD USE |

CONTRACTOR: INTEGRATED PRO SERVICES

ARCHITECT: SFCS

DRAWN BY: MER

CHECKED BY:

PROJECT: ARMED FORCES RETIREMENT HOME

LOCATION: GULFPORT, MS.

MATERIAL FOR: GENERATOR PLATFORM

ELLIS STEEL COMPANY, INC.
P.O. Box 642
Ocean Springs, Mississippi 38654
602/893-5955

JOB NO. 9056

DRAWING NO. R1

A. GENERAL

1. STANDARDS AND CODES:

INTERNATIONAL CODE COUNCIL: "INTERNATIONAL BUILDING CODE – IBC 2006".

AMERICAN SOCIETY OF CIVIL ENGINEERS: "SEI/ASCE 7–05, ASCE STANDARD – MINIMUM DESIGN LOADS FOR BUILDING AND OTHER STRUCTURES".

AMERICAN SOCIETY OF CIVIL ENGINEERS: "SEI/ASECE 24–05, FLOOD RESISTANT DESIGN AND CONSTRUCTION".

AMERICAN CONCRETE INSTITUTE: "ACI 318, BUILDING CODE REQUIREMENTS FOR STRUCTURAL CONCRETE AND COMMENTARY".

2. DO NOT SCALE DRAWINGS. SEE ARCHITECTURAL DRAWINGS FOR ALL DIMENSIONS NOT SHOWN ON THE STRUCTURAL DRAWINGS. ALL DIMENSIONS AND ELEVATIONS SHOWN ON THE STRUCTURAL DRAWINGS SHALL BE VERIFIED BY THE CONTRACTOR AND SHALL CONFORM TO THOSE SHOWN ON THE ARCHITECTURAL DRAWINGS. REPORT ANY DISCREPANCIES TO THE ARCHITECT FOR RESOLUTION BEFORE PROCEEDING WITH CONSTRUCTION. 8

3. COORDINATE WITH ALL DRAWINGS FOR PERTINENT INFORMATION RELATED TO THE STRUCTURAL WORK. ANY CHANGES TO THE STRUCTURAL SYSTEMS SHALL BE REDESIGNED BY A PROFESSIONAL ENGINEER AT NO COST TO THE ARCHITECT AND SUBMITTED TO THE ARCHITECT FOR REVIEW. SUBMITTAL SHALL BE ACKNOWLEDGED IN WRITING BEFORE STARTING CONSTRUCTION. 8 8

4. EQUIPMENT FRAMING LOADS, OPENINGS AND STRUCTURE RELATED TO HVAC, PLUMBING, FIRE PROTECTION, ELECTRICAL AND FOOD SERVICE REQUIREMENTS ARE SHOWN FOR INFORMATIONAL PURPOSES ONLY. OBTAIN APPROVAL OF THE PERTINENT TRADES BEFORE PROCEEDING WITH SUCH PORTION OF THE WORK.

5. THESE STRUCTURAL DRAWINGS REPRESENT THE COMPLETED BUILDING WHICH HAS BEEN DESIGNED FOR THE SELF–WEIGHT OF THE STRUCTURE, THE SUPERIMPOSED LOADS INDICATED IN THE DESIGN LOAD CRITERIA, AND CLADDING LOADS. IT IS THE CONTRACTOR'S RESPONSIBILITY TO DETERMINE ALL CONSTRUCTION LOADS AND PROVIDE PROPER DESIGN, ERECTION/CONSTRUCTION AND REMOVAL OF TEMPORARY FORMWORK, SHORING, RESHORING, STAGING, BRACING, ETC. CONSTRUCTION LOADS EXCEEDING THE SUMMATION OF SUPERIMPOSED DEAD LOADS AND LIVE LOADS ARE NOT PERMITTED ON ANY UNSHORED PORTION OF THE STRUCTURE.

6. IT IS SOLELY THE CONTRACTOR'S RESPONSIBILITY TO DETERMINE THE CONSTRUCTION PROCEDURES AND SEQUENCES TO INSURE THE SAFETY OF THE BUILDING AND ITS COMPONENT PARTS DURING CONSTRUCTION.

7. PROTECT NEW CONSTRUCTION FROM DAMAGE BY CONSTRUCTION EQUIPMENT. REPAIR ALL DAMAGE CAUSED BY CONSTRUCTION ACTIVITY.

8. PAY ALL COSTS, INCLUDING INVESTIGATION AND REDESIGN, DUE TO MISLOCATION OF STRUCTURAL ELEMENTS OR OTHER LACK OF CONFORMANCE WITH THE CONSTRUCTION DOCUMENTS TO BRING WORK INTO COMPLIANCE WITH THE CONSTRUCTION DOCUMENTS.

B. DESIGN LOAD CRITERIA

1. GRAVITY – SUPERIMPOSED DEAD LOADS:

| | |
|---|---|
| ROOFING (INCLUDING GREEN ROOF) | TBD |
| HUNG CEILING AND OTHER SUSPENDED FINISHES | 5 PSF |
| SUSPENDED MEPS (DUCTS, LIGHTING, SPRINKLERS, ETC) | 5 PSF |

2. GRAVITY – SUPERIMPOSED LIVE LOADS:

LEVEL 1 AND LEVEL 2:

| | | |
|---|---|---|
| ASSEMBLY AREAS, DINING ROOM, GYMNASIUM, OFFICES, PUBLIC ROOMS, LIBRARY–READING ROOM, PUBLIC CORRIDORS, STAIRS AND EXITS | 100 PSF | |
| HIGH–DENSITY MEDICAL RECORDS ROOM | 150 PSF | 8 |
| BOWLING ALLEY | 75 PSF | |
| KITCHEN | 150 PSF | |
| 8 LAUNDRY ROOM | 150 PSF | |
| MECHANICAL ROOMS | 150 PSF | |
| STORAGE/SUPPLY ROOMS | 100 PSF | |
| ELECTRICAL SWITCHGEAR ROOM | 150 PSF | 8 |
| TERRACE (PEDESTRIAN ACCESS ONLY) | 100 PSF | |
| LOADING DOCK | 150 PSF | |
| VEHICULAR DRIVEWAYS SUBJECT TO TRUCKING | 250 PSF | |

LEVEL 3 TO LEVEL ROOF:

| | |
|---|---|
| RESIDENTIAL PRIVATE ROOMS AND CORRIDORS SERVING THEM | 40 PSF |
| PARTITIONS | 15 PSF |
| BALCONIES | 100 PSF |
| DINING ROOM, PUBLIC ROOMS, OFFICES, MEDICAL RECORDS, PUBLIC CORRIDORS, STAIRS AND EXITS | 100 PSF |
| ELECTRICAL/TELEPHONE ROOM | 100 PSF |
| LAUNDRY ROOM | 150 PSF |
| PENTHOUSE FLOOR | 150 PSF |

LIVE LOAD REDUCTION IS PERMITTED IN ACCORDANCE WITH IBC 2006 AND ASCE 7–05.

3. GRAVITY – ROOF LOADS:

| | |
|---|---|
| MINIMUM ROOF LIVE LOAD | 20 PSF |
| NET UPLIFT WIND PRESSURE | NO |

4. GRAVITY – SNOW LOADS:

| | | |
|---|---|---|
| GROUND SNOW LOAD, Pg | 5 PSF | 8 |
| EXPOSURE FACTOR, C | 0.90 | |
| THERMAL FACTOR, Ct | 1.0 | |
| SNOW IMPORTANCE FACTOR, Is | 1.0 | |
| 8 OCCUPANCY CATEGORY | II | |

5. WIND LOADS:

| | |
|---|---|
| MAIN WIND–FORCE RESISTING SYSTEM (MWFRS): | |
| BASIC WIND SPEED (3–SECOND GUST) | 150 MPH (PER RFP) |
| WIND IMPORTANCE FACTOR (Iw) | 1.15 |
| OCCUPANCY CATEGORY | III (PER RFP, ESSENTIAL FACILITY FOR WIND ONLY) |
| WIND EXPOSURE CATEGORY | C |
| INTERNAL PRESSURE COEFFICIENT | (PER IBC 2006 & ASCE 7–05) |
| DESIGN WIND PRESSUR | (PER IBC 2006 & ASCE 7–05) |
| BUILDING COMPONENTS & CLADDING: | |
| DESIGN WIND PRESSURES | (PER IBC 2006 & ASCE 7–05) |
| NET UPLIFT PRESSURE | (PER IBC 2006 & ASCE 7–05) |

6. SEISMIC LOADS:

| | |
|---|---|
| SEISMIC IMPORTANCE FACTOR, Ie | 1.00 |
| OCCUPANCY CATEGORY | II |
| MAPPED SPECTRAL RESPONSE ACCELERATION, Ss | 0.15g |
| MAPPED SPECTRAL RESPONSE ACCELERATION, S1 | 0.06g |
| SITE CLASS FOR SOIL PROFILE | D |
| SPECTRAL RESPONSE COEFFICIENT, Sds | 0.160g |
| SPECTRAL RESPONSE COEFFICIENT, Sd1 | 0.096g |
| SEISMIC DESIGN CATEGORY | B |
| SEISMIC RESPONSE COEFFICIENT, Cs | 0.032 |
| RESPONSE MODIFICATION FACTOR, R | 5.0 |
| SYSTEM OVERSTRENGTH FACTOR, Ωo | 2.5 |
| DEFLECTION AMPLIFICATION FACTOR, Cd | 4.5 |
| BASIC STRUCTURAL SYSTEM: | |
| ORDINARY REINFORCED CONCRETE CONCRETE SHEAR WALLS | |
| ANALYSIS PROCEDURE: | |
| EQUIVALENT LATERAL FORCE PROCEDURE | |
| ARCHITECTURAL, MECHANICAL & ELECTRICAL COMPONENT SEISMIC DESIGN REQUIREMENTS: NON–STRUCTURAL COMPONENTS SHALL BE DESIGNED & CONSTRUCTED IN ACCORDANCE WITH THE REQUIREMENTS OF IBC 2006. | |

7. FLOOD LOADS:

| | |
|---|---|
| OCCUPANCY CATEGORY | II |
| BASE FLOOD ELEVATION | 18.00 FEET ABOVE SEA LEVEL (FEMA AE MAP) |
| GROUND ELEVATION | SEE PLAN |
| DESIGN FLOOD ELEVATION | (PER SEI/ASCE 7–05 & SEI/ASCE 24–05) |
| DESIGN FLOOD LOAD ON WALL & COLUMNS | (PER SEI/ASCE 7–05 & SEI/ASCE 24–05) |
| FLOOD ZONE CLASSIFICATION | COASTAL A ZONE (PER SEI/ASCE 7–05 & SEI/ASCE 24–05) |

C. FOUNDATIONS

1. REFER TO PILE LOAD TEST PROGRAM REPORT BY BERKEL AND COMPANY CONTRACTORS INC DATED 14 DECEMBER 2007 AND SUPPLEMENTAL REPORT DATED 24 JANUARY 2008 FOR AUGER–CAST PILE DESIGN VALUES AND INSTALLATION RECOMMENDATIONS AND CONSIDERATIONS.

2. AUGER–CAST PILES DESIGN VALUES:

12" DIAMETER PILE:
ALLOWABLE COMPRESSION CAPACITY 60 TONS (PER PILE)

33 14" DIAMETER PILE:
ALLOWABLE COMPRESSION CAPACITY 80 TONS (PER PILE)

16" DIAMETER PILE:
8 ALLOWABLE COMPRESSION CAPACITY 125 TONS (PER PILE)
ALLOWABLE TENSION (UPLIFT) CAPACITY (PER BERKEL)
ALLOWABLE LATERAL LOAD CAPACITY (PER BERKEL)

18" DIAMETER PILE:
ALLOWABLE COMPRESSION CAPACITY (PER BERKEL)
ALLOWABLE TENSION (UPLIFT) CAPACITY (PER BERKEL)
ALLOWABLE LATERAL LOAD CAPACITY (PER BERKEL)

3. VERIFY ALL EXISTING FIELD CONDITIONS THAT MAY AFFECT THE INSTALLATION OF THE FOUNDATION SYSTEM PRIOR TO STARTING WORK. 8

4. IMMEDIATELY NOTIFY THE ARCHITECT OF ANY UNUSUAL SOIL CONDITIONS OR SOIL CONDITIONS DIFFERENT THAN AS INDICATED IN THE BORING LOGS. REFER TO GEOTECHNICAL ENGINEERING REPORT (#254–75059–1) PREPARED FOR THE ARCHITECT BY PROFESSIONAL SERVICES INDUSTRIES, INC (PSI) DATED 3 JULY 2007 FOR BORING LOGS. 8

5. LOCATE AND PROTECT ALL UTILITIES WHICH MAY BE AFFECTED BY THE CONSTRUCTION PROCESS.

6. INSTALLATION OF AUGER–CAST PILES SHALL BE INSPECTED AND APPROVED BY A QUALIFIED INDEPENDENT GEOTECHNICAL ENGINEER. 8 8

7. PREPARE AND SUBMIT AS–BUILT PILE LOCATION PLAN TO THE ARCHITECT. IMMEDIATELY REPORT ANY DEVIATIONS IN PILE LOCATIONS TO THE ARCHITECT. ALL RE–DESIGN COSTS DUE TO PILE MISLOCATION SHALL BE AT THE AUGER–CAST PILE SUB–CONTRACTOR'S EXPENSE.

8. REFER TO SPECIFICATION SECTION 03164, "AUGERED PRESSURE GROUTED PILES", FOR FURTHER INFORMATION. 8

D. CAST–IN–PLACE CONCRETE

1. CAST–IN–PLACE CONCRETE WORK SHALL CONFORM TO THE REQUIREMENTS OF THE AMERICAN CONCRETE INSTITUTE, INCLUDING ACI 301 AND REFERENCED ASTM STANDARDS.

2. ALL CONCRETE IS NORMAL WEIGHT CONCRETE, UNO.

3. CONCRETE SHALL HAVE THE FOLLOWING MINIMUM COMPRESSIVE STRENGTHS AT 28 DAYS:

| | | |
|---|---|---|
| AUGER–CAST PILES | f'c = 4,000 PSI | 8 |
| PILE CAPS: | f'c = 4,000 PSI | |
| SLAB–ON–GRADE: | f'c = 4,000 PSI | |
| ALL STRUCTURAL CONCRETE, UNO | f'c = 5,000 PSI | |
| FILL, TOPPING SLABS | f'c = 4,000 PSI | |

4. ALL REINFORCING STEEL SHALL BE NEW DOMESTIC DEFORMED BILLET STEEL CONFORMING TO ASTM A615, GRADE 60, UNO.

5. PROVIDE EPOXY COATED REINFORCING STEEL CONFORMING TO ASTM A775 WHERE INDICATED.

6. WELDING OF REINFORCING STEEL IS NOT PERMITTED.

7. FIELD BENDING OF REINFORCING STEEL IS NOT PERMITTED, UNO.

8. WELDED WIRE FABRIC SHALL CONFORM TO ASTM A185 AND BE SUPPLIED IN FLAT SHEETS.

9. PROVIDE ALL ACCESSORIES (CHAIRS, SPACE BARS, SUPPORTS, ETC) NECESSARY FOR SECURING REINFORCING STEEL.

10. REVIEW ALL DRAWINGS FOR SIZE AND LOCATION OF EMBEDDED ITEMS, INSERTS, CONDUITS, REGLETS, DRAINS, BLOCKOUTS, SLEEVES, CHASES, OPENINGS, SLOPES, HOUSEKEEPING PADS, CURBS, NON–LOAD BEARING MASONRY WALLS, SLAB DEPRESSIONS, FILLS, ETC REQUIRED BY OTHER TRADES. RECONCILE THEIR EXACT LOCATIONS BEFORE PREPARING FORMWORK AND REINFORCING STEEL SHOP DRAWINGS AND PROCEEDING WITH THE WORK. OBTAIN AUTHORIZATION FROM THE ARCHITECT BEFORE TO PLACING ANY OPENING NOT SHOWN ON THE STRUCTURAL DRAWINGS. 8

11. COREDRILLING PILE CAPS, COLUMNS, WALLS, BEAMS OR SLABS IS NOT PERMITTED UNLESS AUTHORIZED BY THE 8 ARCHITECT.

12. LOCATE CONSTRUCTION JOINTS AS NOT TO IMPAIR THE STRENGTH OF THE STRUCTURE.

13. SUBMIT CONSTRUCTION JOINT LOCATIONS AND DETAILS TO THE ARCHITECT WITH THE REINFORCING STEEL SHOP DRAWINGS. 8

14. ROUGHEN INTERFACE SURFACE BETWEEN PILE CAPS AND WALLS & COLUMNS TO A FULL AMPLITUDE OF ¼".

15. PROVIDE ¾" CHAMFER ON ALL EXPOSED CORNERS OF WALLS, UNLESS OTHERWISE INDICATED ON THE ARCHITECTURAL DRAWINGS. MINIMUM CLEARANCES FOR REINFORCING STEEL SHALL CONFORM WITH THE TYPICAL REINFORCING BARS CLEARANCE TABLE REQUIREMENTS.

16. DOWELS IN PILE CAPS TO MATCH COLUMN AND WALL VERTICAL BARS, UNO.

17. PROVIDE 2 #5 x 5'–0" DIAGONAL BARS AT RE–ENTRANT CORNERS IN SLABS.

18. PROVIDE MINIMUM DEVELOPMENT LENGTH AND CLASS B TENSION LAP SPLICE LENGTH OF DEFORMED BARS IN ACCORDANCE WITH TABLE #1 & #2.

TABLE #1

MINIMUM DEVELOPMENT LENGTH AND CLASS B TENSION LAP SPLICE LENGTH

USE THIS TABLE WHEN EITHER OF THE FOLLOWING CRITERIA IS SATISFIED:
- CASE 1A: CLEAR SPACING OF BARS BEING DEVELOPED OR SPLICED IS NOT LESS THAN db, CLEAR COVER IS NOT LESS THAN db, AND CONFINING REINFORCEMENT (STIRRUPS OR TIES) ARE PROVIDED THROUGHOUT ld NOT LESS THAN THE CODE MINIMUM, OR
- CASE 1B: CLEAR SPACING OF BARS BEING DEVELOPED OR SPLICED IS NOT LESS THAN 2db AND CLEAR COVER IS NOT LESS THAN db.
- FOR OTHER CASES, USE TABLE #2.

| BAR SIZE | f'c = 4000 PSI | | | |
|---|---|---|---|---|
| | DEVELOPMENT LENGTH | | CLASS B TENSION LAP SPLICE | |
| | OTHER BARS | TOP BARS | OTHER BARS | TOP BARS |
| # 3 | 15" | 19" | 19" | 25" |
| # 4 | 19" | 25" | 25" | 33" |
| # 5 | 24" | 31" | 31" | 41" |
| # 6 | 29" | 37" | 37" | 49" |
| # 7 | 42" | 54" | 54" | 71" |
| # 8 | 48" | 62" | 62" | 81" |
| # 9 | 54" | 70" | 70" | 91" |
| # 10 | 61" | 79" | 79" | 102" |
| # 11 | 67" | 87" | 87" | 114" |

| BAR SIZE | f'c = 5000 PSI | | | |
|---|---|---|---|---|
| | DEVELOPMENT LENGTH | | CLASS B TENSION LAP SPLICE | |
| | OTHER BARS | TOP BARS | OTHER BARS | TOP BARS |
| # 3 | 13" | 17" | 17" | 22" |
| # 4 | 17" | 23" | 23" | 29" |
| # 5 | 22" | 28" | 28" | 36" |
| # 6 | 26" | 34" | 34" | 44" |
| # 7 | 38" | 49" | 49" | 63" |
| # 8 | 43" | 56" | 56" | 72" |
| # 9 | 48" | 63" | 63" | 81" |
| # 10 | 54" | 71" | 71" | 92" |
| # 11 | 60" | 78" | 78" | 102" |

8

TABLE #2

MINIMUM DEVELOPMENT LENGTH AND CLASS B TENSION LAP SPLICE LENGTH

USE THIS TABLE WHEN THE CRITERIA OF TABLE 1 IS NOT SATISFIED.

| BAR SIZE | f'c = 4000 PSI | | | |
|---|---|---|---|---|
| | DEVELOPMENT LENGTH | | CLASS B TENSION LAP SPLICE | |
| | OTHER BARS | TOP BARS | OTHER BARS | TOP BARS |
| # 3 | 22" | 28" | " | 37" |
| # 4 | 29" | 37" | " | 49" |
| # 5 | 36" | 47" | " | 61" |
| # 6 | 43" | 56" | " | 73" |
| # 7 | 63" | 81" | " | 106" |
| # 8 | 72" | 93" | " | 121" |
| # 9 | 81" | 105" | " | 136" |
| # 10 | 91" | 118" | " | 153" |
| # 11 | 101" | 131" | " | 170" |

| BAR SIZE | f'c = 5000 PSI | | | |
|---|---|---|---|---|
| | DEVELOPMENT LENGTH | | CLASS B TENSION LAP SPLICE | |
| | OTHER BARS | TOP BARS | OTHER BARS | TOP BARS |
| # 3 | 20" | 25" | 25" | 33" |
| # 4 | 26" | 34" | 34" | 44" |
| # 5 | 32" | 42" | 42" | 54" |
| # 6 | 39" | 50" | 50" | 65" |
| # 7 | 56" | 73" | 73" | 95" |
| # 8 | 64" | 83" | 83" | 108" |
| # 9 | 72" | 94" | 94" | 122" |
| # 10 | 81" | 106" | 106" | 137" |
| # 11 | 90" | 117" | 117" | 152" |

NOTES FOR TABLES #1 AND #2:

1. DEVELOPMENT LENGTH AND TENSION LAP SPLICE LENGTH OF DEFORMED BARS SHALL BE COMPUTED IN ACCORDANCE WITH ACI 318–05.
2. TABULATED VALUES ARE BASED ON THE FOLLOWING:
   - ASTM A615 GRADE 60 DEFORMED BARS
   - UNCOATED BARS (I.E., NOT EPOXY COATED)
   - NORMAL WEIGHT CONCRETE
3. TOP BARS ARE DEFINED AS HORIZONTAL REINFORCEMENT PLACED SUCH THAT MORE THAN 12 INCHES OF FRESH CONCRETE IS CAST BELOW THE DEVELOPMENT LENGTH OR LAP SPLICE LENGTH OF THE BARS.
4. FOR EPOXY–COATED BARS, MULTIPLY THE TABULATED VALUES BY 1.31 FOR TOP BARS AND 1.5 FOR OTHER BARS.
5. FOR LIGHTWEIGHT CONCRETE, MULTIPLY THE TABULATED VALUES BY 1.3.
6. WHEN LAPPING TWO DIFFERENT SIZE BARS, USE THE DEVELOPMENT LENGTH OF THE LARGER BAR OR THE LAP SPLICE LENGTH OF THE SMALLER BAR, WHICHEVER LENGTH IS GREATER.

8

TABLE #3 8

TYPICAL REINFORCING BAR CLEARANCE TABLE

| LOCATION | CLEARANCE |
|---|---|
| CONCRETE CAST AGAINST AND PERMANENTLY EXPOSED TO EARTH | 3" |
| BEAMS (LONGITUDINAL REINFORCING PARALLEL TO JOIST OR SLAB) | 3" |
| BEAMS (LONGITUDINAL REINFORCING PERPENDICULAR TO JOIST OR SLAB) | 2" |
| BEAM STIRRUPS | 1½" |
| COLUMNS AND PIERS (VERTICAL REINFORCING) | 2" |
| COLUMN AND PIER TIES | 1½" |
| WALLS (INTERIOR FACE) | ¾" 8 |
| WALLS (EXTERIOR FACE, #5 AND SMALLER) | 1½" |
| WALLS (EXTERIOR FACE, #6 AND LARGER) | 2" |
| SURFACES EXPOSED TO LIQUIDS | 2" |
| FRAMED SLABS (INTERIOR, INCLUDING STAIRS) | ¾" |
| FRAMED SLABS (EXTERIOR, INCLUDING STAIRS) | 1½" 18 |
| SLABS ON GRADE (BOTTOM REINFORCING) | 2" |
| SLABS ON GRADE (WELDED WIRE FABRIC) | ⅓ SLAB THICKNESS FROM TOP OF SLAB |
| PILE CAPS (BOTTOM REINFORCING ABOVE TOP OF PILE) | 3" |
| POST–TENSIONED CONCRETE: | |
| CONCRETE EXPOSED TO EARTH OR WEATHER | |
| – SLABS | 1" |
| CONCRETE NOT EXPOSED TO WEATHER OR IN CONTACT WITH GROUND | |
| – SLABS | ¾" |
| – BEAMS (STIRRUPS) | 1" |

18

19. REFER TO SPECIFICATION SECTION 03300, "CAST–IN–PLACE CONCRETE", FOR FURTHER INFORMATION. 8

D. TWO–WAY REINFORCED CONCRETE FLAT SLAB FRAMING:

1. SEE PLANS AND PLAN NOTES FOR SLAB THICKNESS, REINFORCING REQUIREMENTS AND BAR PLACING SEQUENCE.

2. SUBMIT DIMENSIONED SHOP DRAWINGS AT ALL LEVELS LOCATING FLOOR AND ROOF EDGES AND CAST–IN–PLACE EMBEDS AND INSERTS FOR EXTERIOR PRECAST WALL PANELS.

3. SUBMIT DIMENSIONED COORDINATION SHOP DRAWINGS AT ALL LEVELS SHOWING THE SIZE AND LOCATION OF ALL OPENINGS AND SLEEVES REQUIRED BY OTHER TRADES. DO NOT CUT REINFORCING BARS; RELOCATE REINFORCING BARS TO FIT AROUND OPENINGS AND SLEEVES PER TYPICAL DETAIL. RECESSED BOXES SHALL BE TREATED AS SLAB OPENINGS.

4. OPENINGS OR SLEEVES NOT SHOWN ON THE COORDINATION SHOP DRAWINGS ARE NOT PERMITTED UNLESS AUTHORIZED IN WRITING BY THE ARCHITECT.

5. CORE–DRILLING IS NOT PERMITTED UNLESS AUTHORIZED IN WRITING BY THE ARCHITECT.

6. REFER TO ARCHITECTURAL DRAWINGS FOR LOCATION OF INTERIOR NON–LOAD BEARING MASONRY WALLS. PROVIDE SLIP–CONNECTION WHICH PERMITS VERTICAL MOVEMENT AT TOP OF NON–LOAD BEARING MASONRY WALLS.

7. FURNISH ALL ACCESSORIES, CHAIRS, SPACER BARS, SUPPORTS, ETC NECESSARY TO SECURE REINFORCING BARS. PROVIDE PLASTIC TIPPED BOLSTERS AND CHAIRS AT ALL LOCATIONS WHERE THE CONCRETE SURFACE IN CONTACT WITH THE BOLSTERS OR CHAIRS IS EXPOSED TO WEATHER.

8. FINISH CONCRETE SLABS FLAT AND LEVEL WITHIN TOLERANCES TO THE ELEVATION INDICATED ON THE DRAWINGS. CAMBER FORMWORK AS NECESSARY.

9. MAKE STOP IN CONCRETE PLACEMENT WITH VERTICAL BULKHEAD AND HORIZONTAL KEY WITH REINFORCING BARS CONTINUOUS THROUGH CONSTRUCTION JOINT PER TYPICAL DETAIL.

PROPERTY OF THE UNITED STATES GOVERNMENT – FOR OFFICIAL USE ONLY. Do not remove this notice. Properly destroy documents when no longer needed.

GSA
GENERAL SERVICES ADMINISTRATION
77 FORSYTH STREET
SUITE 600
ATLANTA, GA 30303
TEL: (404)331–3200

AFRH The Premier Retirement Community for America's Veterans
JE JACOBS
PROJECT MANAGEMENT CONSULTANT TO THE GENERAL SERVICES ADMINISTRATION

YATES CONSTRUCTION

SFCS Architecture Engineering Planning Interiors

URS
URS CORPORATION
2020 K ST, NW
SUITE 300
WASHINGTON D.C. 20006

ISSUED FOR CONSTRUCTION

CERTIFICATIONS

DISTRICT OF COLUMBIA
MARK W. ZIMPELMAN
8572
REGISTERED
PROFESSIONAL ENGINEER
09/08/08

KEY PLAN

REVISION NOTES

| MARK | DATE | DESCRIPTION |
|---|---|---|
| | 01/15/08 | COLUMN FOUNDATION SUBMISSION |
| | 01/15/08 | ISSUED FOR CONSTRUCTION |
| 8 | 03/25/08 | FIRST FLOOR SLAB SUBMISSION |
| 18 | 05/09/08 | LEVEL 2 SLAB – PENETRATIONS |
| 33 | 07/25/08 | ADD PILE CAP DETAILS |
| 33 | 09/08/08 | RE–ISSUED FOR CONSTRUCTION |

GRAPHIC SCALE

CONTRACTORS

| | |
|---|---|
| A/E CON. NO. | GS–04P–07–EX–C–0099 |
| A/E TASK NO. | |
| CONS. CONTR. | |
| CONS. WORK | |
| PRIME A/E | |
| SUB A/E | |
| CONSTR. CON. | |

BUILDING

| | |
|---|---|
| NAME | ARMED FORCES RETIREMENT HOME |
| STREET | 1800 BEACH DRIVE |
| CITY/ST./ZIP | GULFPORT, MS 39507 |
| BUILDING NO. | |
| OTHER BUILDING NOs. | |
| FACILITY CODE | |

PROJECT

| | |
|---|---|
| PROJECT TITLE | ARMED FORCES RETIREMENT HOME GULFPORT, MISSISSIPPI |
| PROJECT DESCRIPTION | NEW CONSTRUCTION |
| PROJECT NO. | 31942982 |
| GSA PM | STEVEN SMITH |
| SUBMISSION | ISSUED FOR CONSTRUCTION |
| SUB. DATE | 09/08/2008 |

DRAWING

| | |
|---|---|
| DRAWING TITLE | GENERAL NOTES |
| FILE NAME | S–001–N0095730.DWG |
| FLOOR NO. | 00 |
| DRAWN BY | JVS DATE DRAFTED: |
| CHECKED BY | MWZ SHEET SIZE: 34 X 44 |
| DRAWING NO. | S 0 01 |
| | DISCIPLINE SHEET TYPE SEQUENCE |
| | SHEET 000 OF 000 |

## E. MASONRY

1. MASONRY WORK SHALL BE IN ACCORDANCE WITH ACI 530.1/ASCE 6/ TMS 602, "SPECIFICATION FOR MASONRY STRUCTURES", LATEST EDITION.
2. MINIMUM COMPRESSIVE STRENGTH OF CONCRETE MASONRY, f'm = 1500 PSI.
3. CONCRETE MASONRY UNITS: HOLLOW – ASTM C90, TYPE I OR II, LIGHTWEIGHT; MINIMUM COMPRESSIVE STRENGTH ON NET AREA OF 1900 PSI.
4. MORTAR: ASTM C270 – TYPE S; MINIMUM COMPRESSIVE STRENGTH AT 28 DAY OF 1800 PSI.
5. GROUT: ASTM C476; MINIMUM COMPRESSIVE STRENGTH AT 28 DAYS OF 2000 PSI.
6. HORIZONTAL JOINT REINFORCING. ASTM A82, Fy = 70 KSI, STANDARD 9 GAGE TRUSS–TYPE, GALVANIZED. PROVIDED SPECIAL ACCESSORIES AT CORNERS AND INTERSECTIONS.
7. USE MASONRY UNITS WITH CORES AND WEBS MANUFACTURED TO ALIGN VERTICALLY TO PROVIDE CONTINUOUS UNOBSTRUCTED CELLS FOR PLACING STEEL REINFORCEMENT AND GROUTING.
8. PROVIDE VERTICAL STEEL REINFORCEMENT AT INDICATED IN THE SCHEDULE. DOWELS TO MATCH VERTICAL STEEL REINFORCEMENT, UNO. EXTEND VERTICAL STEEL REINFORCEMENT TO WITHIN 2" OF TOP OF BOND BEAM.
9. LAP SPLICES FOR STEEL REINFORCEMENT USED IN MASONRY CONSTRUCTION TO BE AS FOLLOWS:

   36" FOR #4 BARS
   45" FOR #5 BARS
   54" FOR #6 BARS

10. PROVIDE REINFORCING ALIGNMENT DEVICES AT A MAXIMUM SPACING OF 192 BAR DIAMETERS.
11. PROVIDE FULL MORTAR COVERAGE ON HEAD, BED (FACE SHELLS), WEBS AND COLLAR JOINTS, UNO.
12. PROVIDE FULL MORTAR COVERAGE AND GROUT SOLID FOR ALL UNITS BELOW GRADE.
13. PROVIDE HORIZONTAL JOINT REINFORCEMENT IN ALL WALLS AT 16" OC, UNO.
14. PROVIDE HORIZONTAL JOINT REINFORCEMENT IN EVERY 8" COURSE FOR THREE CONSECUTIVE COURSES ABOVE AND BELOW OPENINGS, AND EXTEND REINFORCEMENT A MINIMUM OF 2'–0" BEYOND EACH SIDE OF OPENING, EXCEPT AT CONTROL JOINTS.
15. PROVIDE BOND BEAMS WHERE INDICATED ON THE DRAWINGS. PROVIDE MINIMUM 2#4 CONTINUOUS BAR IN BOND BEAMS, UNO. FILL BOND BEAMS WITH GROUT.
16. PROVIDE LINTELS OVER ALL OPENINGS IN MASONRY WALLS. REFER TO THE ARCHITECTURAL AND MEP DRAWINGS FOR LOCATION AND SIZE OF OPENINGS. CONTRACTOR'S OPTION IN SELECTING TYPE OF LINTEL, UNO. LINTELS SHALL BE SIZED PER THE SCHEDULES BELOW.

MASONRY LINTEL SCHEDULE

| WALL WIDTH | LINTEL DEPTH | MAX CLR SPAN | TOP & BOT REINF |
|---|---|---|---|
| 8" | 8" | 4'–0" | 2–#4 |
| 8" | 8" | 5'–0" | 2–#4 |
| 8" | 8" | 6'–0" | 2–#7 |
| 8" | 16" | 9'–0" | 2–#4 |
| 8" | 16" | 11'–0" | 2–#5 |
| 8" | 16" | 13'–0" | 2–#6 |
| 8" | 16" | 14'–6" | 2–#8 |

MASONRY LINTEL SCHEDULE NOTES:

ALL LINTEL BEAMS SHALL HAVE A MINIMUM END BEARING OF 8" OR 1" PER FOOT OF CLEAR SPAN, WHICHEVER IS LARGER.

ALL LINTEL BEAMS SHALL HAVE A MINIMUM OF 16" OF SOLID MASONRY UNDER BEARING ENDS FOR THE LENGTH STATED IN THE PREVIOUS NOTE.

ALL REINFORCING SHALL BE CONTINUOUS AND EXTEND TO THE END OF THE LINTEL BEAM.

FILL LINTEL BEAMS WITH 3000 PSI COARSE GROUT.

SPAN SHALL BE CONSIDERED AS THE CLEAR MASONRY OPENING.

STEEL LINTEL SCHEDULE

| MASONRY OPENING | MEMBER SIZE(S) | BEARING EACH END |
|---|---|---|
| 4'–0" OR LESS | L3½x3x5/16 | 6" |
| 4'–1" TO 6'–0" | L4x3x5/16 LLV | 6" |
| 6'–1" TO 7'–0" | L5x3x3/8 LLV | 8" |
| 7'–1" TO 8'–0" | L6x3x5/16 LLV | 8" |
| 8'–1" TO 10'–0" | W8x21 + 5/16" BOTTOM PLATE | 8" |
| 10'–1" TO 12'–0" | W16x26 + 5/16" BOTTOM PLATE | 12" |

STEEL LINTEL SCHEDULE NOTES:

THE FABRICATOR SHALL SUPPLY LOOSE LINTEL ANGLES OVER ALL MASONRY OPENINGS AND RECESSES, UNO. LINTELS NOT SCHEDULED ON THE DRAWINGS SHALL CONSIST OF A SINGLE ANGLE WITH A 3½" HORIZONTAL LEG FOR EACH 4" OF WALL THICKNESS.

ALL LINTELS WITHIN THE EXTERIOR WALL SYSTEM SHALL BE GALVANIZED.

ALL ANGLE LINTELS SHALL HAVE 8" OF SOLID MASONRY BELOW BEARING END, UNO.

ALL BEAM LINTELS SHALL HAVE 16" OF SOLID MASONRY BELOW BEARING END, UNO.

BOTTOM PLATES ON BEAMS SHALL BE ½" LESS IN WIDTH THAN THE WALL THICKNESS AND EXTEND FOR THE FULL LENGTH OF BEAM INCLUDING THE BEARING ENDS, UNO.

BOTTOM PLATES SHALL BE WELDED TO THE BEAM WITH ¼" FILLET WELDS, 3" LONG, BOTH SIDES AT 9" ON CENTER. STAGGER PLACEMENT OF WELDS FROM SIDE TO SIDE.

17. PROVIDE CONTROL JOINTS IN MASONRY WALLS AS INDICATED ON THE ARCHITECTURAL DRAWINGS AND IN THE SPECIFICATIONS.
18. TEMPORARILY SUPPORT AND BRACE MASONRY UNTIL PERMANENT CONSTRUCTION IS IN PLACE.
19. REFER TO SPECIFICATION SECTION 04810 "UNIT MASONRY" FOR FURTHER INFORMATION.

## F. STRUCTURAL STEEL

1. STRUCTURAL STEEL SHALL CONFORM TO THE AISC 360–05 "SPECIFICATIONS FOR DESIGN, FABRICATION AND ERECTION OF STRUCTURAL STEEL FOR BUILDINGS".
2. STRUCTURAL STEEL: ASTM A992 (Fy = 50 KSI) – ROLLED STEEL SHAPES, UNO.
   ASTM A36 (Fy = 36 KSI) – STEEL PLATES, CHANNELS, ANGLES, BARS AND RODS, UNO.
   ASTM A500 (Fy = 46 KSI) – STEEL TUBES.
3. ANCHOR RODS (BOLTS) SHALL CONFORM TO ASTM F1554 GRADE 36, UNO.
4. BOLTS AND BOLTED CONNECTIONS SHALL CONFORM TO THE REQUIREMENTS OF THE "SPECIFICATIONS FOR STRUCTURAL JOINTS USING ASTM A325 OR A490 BOLTS" AS APPROVED BY THE COUNCIL ON RIVETED AND BOLTED JOINTS. USE BEARING–TYPE BOLTS WITH THREADS EXCLUDED FROM THE SHEAR PLANE, UNO.
5. WELDED CONNECTIONS SHALL CONFORM TO THE LATEST REVISED CODE OF THE AMERICAN WELDING SOCIETY, AWS D1.1, LATEST EDITION.
6. WELDING ELECTRODES SHALL BE E70 XX (LOW HYDROGEN) OR BETTER. FOR WELDING SYMBOLS WITH NO LENGTH DIMENSION GIVEN, THE WELDING SHALL BE CONTINUOUS BETWEEN ABRUPT CHANGES IN DIRECTION. WELDS NOT OTHERWISE NOTED SHALL BE ¼" IN SIZE.
7. SUBMIT CONNECTION DESIGN CALCULATIONS SIGNED & STAMPED BY PROFESSIONAL ENGINEER FOR ALL STRUCTURAL STEEL CONNECTIONS. FAILURE TO SUBMIT SUCH CALCULATIONS FOR REVIEW WITH OR PRIOR TO SUBMISSION OF SHOP DRAWINGS WILL BE CAUSE FOR REJECTION OF THE SHOP DRAWING SUBMITTAL. CONNECTION CALCULATIONS MUST CLEARLY SHOW A RATIONAL ANALYSIS PROCEDURE, INCLUDING LOCAL EFFECTS ON CONNECTED MEMBERS.
8. VERIFY THE EXACT SIZE AND LOCATION OF ALL OPENINGS PRIOR TO FABRICATION OF STEEL FRAMING MEMBERS.
9. OPENINGS THROUGH STEEL BEAMS ARE NOT PERMITTED.
10. FIELD CUTTING OF STRUCTURAL STEEL MEMBERS IS PROHIBITED.
11. REFER TO SPECIFICATION SECTION 05120 "STRUCTURAL STEEL" FOR FURTHER INFORMATION.

## E. STEEL DECK

1. STEEL DECK FABRICATION AND ERECTION SHALL CONFORM TO THE LATEST STEEL DECK INSTITUTE SPECIFICATIONS.
2. STEEL DECK SHALL INCLUDE ANY MISCELLANEOUS CLOSURE PIECES, METAL SCREEDS, ROOF CURBS, REINFORCING AROUND OPENINGS, ETC. REQUIRED TO MAKE A COMPLETE JOB. MISCELLANEOUS ITEMS SHALL BE GALVANIZED AND SHALL BE NO THINNER THAN 18 GAGE.
3. STEEL ROOF DECK SHALL TYPICALLY BE 1½" DEEP x 20 GAGE, GALVANIZED G90, WIDE RIB ROOF DECK WITH THE FOLLOWING MINIMUM PROPERTIES:

   $I_p = 0.22\ in^4$
   $I_n = 0.24\ in^4$
   $S_p = 0.25\ in^3$
   $S_n = 0.26\ in^3$

4. ALL DECK SHALL BE PUDDLE WELDED (¾" DIAMETER MINIMUM) TO THE SUPPORTS AT 6" CENTERS MAXIMUM WITH THE FIRST AND LAST RIBS OF EACH SHEET WELDED TO THE SUPPORTS. AT BRACED FRAMES, MOMENT FRAMES AND BUILDING PERIMETER, PROVIDE PUDDLE WELDS AT MINIMUM 6" ON CENTER. SIDE LAPS SHALL BE SCREWED WITH #10 SELF–TAPPING SCREWS AT 18" ON CENTER.
5. STEEL DECK CROSS SECTIONS ARE ONLY REPRESENTED DIAGRAMMATICALLY ON THE DRAWINGS.
6. REFER TO SPECIFICATION SECTION 05310 "STEEL DECK" FOR FURTHER INFORMATION.

60

### LOUVER HEADER SCHEDULE

| TUBE SIZE | LOCATION | REMARKS |
|---|---|---|
| HSS 10x10x3/8 | ALONG GRID L.6 BTWN GRID 0.3 & 0.6 | WEST MECH ROOM #1 |
| HSS 10x10x¼ | ALONG GRID 0.1 BTWN GRID M & N | WEST MECH ROOM #1 |
| HSS 10x10x¼ | ALONG GRID 0.1 BTWN GRID N & P | WEST MECH ROOM #1 |
| HSS 10x10x¼ | ALONG GRID 0.1 BTWN GRID P & Q | WEST MECH ROOM #1 |
| HSS 10x10x¼ | ALONG GRID 0.1 BTWN GRID Q & R | WEST MECH ROOM #1 |
| | | |
| HSS 10x10x3/8 | ALONG GRID P BTWN GRID 24.5 & 26.2 | EAST MECH ROOM #2 |
| HSS 10x10x¼ | ALONG GRID 28.1 BTWN GRID Q & R | EAST MECH ROOM #2 |
| HSS 10x10x¼ | ALONG GRID 28.1 BTWN GRID R & S | EAST MECH ROOM #2 |
| HSS 10x10x¼ | ALONG GRID 28.1 BTWN GRID S & U | EAST MECH ROOM #2 |
| | | |
| HSS 10x10x3/8 | ALONG GRID AE BTWN GRID 19 & 20 | NORTH MECH ROOM #3 |
| HSS 10x10x¼ | ALONG GRID AE BTWN GRID 21 & 23 | NORTH MECH ROOM #3 |
| HSS 10x10x¼ | ALONG GRID AE BTWN GRID 25 & 25.9 | NORTH MECH ROOM #3 |
| HSS 10x10x3/8 | ALONG GRID 19 BTWN GRID AD & AB | NORTH MECH ROOM #3 |
| HSS 10x10x3/8 | ALONG GRID 28 BTWN GRID AB & A.9 | NORTH MECH ROOM #3 |
| | | |

NOTE:

1. SEE ARCH & MECH DRAWINGS FOR LOUVER LOCATIONS AND DETAILS.
2. SEE S521 FOR TUBE CONNECTION DETAILS.

### NON-LOAD BEARING CMU WALL SCHEDULE

| WALL THICKNESS | WALL REINF | LEVEL | LOCATION | REMARKS |
|---|---|---|---|---|
| 8" | #6@8" | 1 | ALONG GRID A BTWN GRID 5.3 & 5.8 | PAVILION A |
| 8" | #6@16" | 1 | ALONG GRID 5.8 BTWN GRID A & B | PAVILION A |
| 8" | #6@8" | 1 | ALONG GRID V BTWN GRID 5.3 & 6 | PAVILION A |
| 8" | #6@16" | 1 | ALONG GRID Z2 BTWN GRID ZD & ZE | FRONT ENTRY |
| 8" | #6@16" | 1 | ALONG GRID Z5 BTWN GRID ZD & ZE | FRONT ENTRY |
| 8" | #6@8" | 1 | ALONG GRID A BTWN GRID 11.3 & 11.8 | PAVILION B |
| 8" | #6@16" | 1 | ALONG GRID 11.8 BTWN GRID A & B | PAVILION B |
| 8" | #6@8" | 1 | ALONG GRID V BTWN GRID 11.3 & 11.8 | PAVILION B |
| 8" | #6@16" | 1 | ALONG GRID 11.8 BTWN GRID T & V | PAVILION B |
| 8" | #6@8" | 1 | ALONG GRID A BTWN GRID 17.3 & 17.8 | PAVILION C |
| 8" | #6@16" | 1 | ALONG GRID 17.8 BTWN GRID A & B | PAVILION C |
| 8" | URM | 1 | ALONG GRID B BTWN GRID 18 & 19 | BEHIND PRECAST; PAVILION C |
| 8" | URM | 1 | ALONG GRID U BTWN GRID 19 & 20 | BEHIND PRECAST; PAVILION C |
| 8" | URM | 1 | ALONG GRID U BTWN GRID 20 & 21 | BEHIND PRECAST; PAVILION C |
| 8" | URM | 1 | ALONG GRID U BTWN GRID 21 & 22 | BEHIND PRECAST; PAVILION C |
| 8" | URM | 1 | ALONG GRID L.6 BTWN GRID 0.1 & 0.3 | BEHIND PRECAST WEST MECH ROOM #1 |
| 8" | #4@48" | 1 | ALONG GRID L.6 BTWN GRID 0.3 & 0.6 | AROUND LOUVER & HSS HEADER WEST MECH ROOM #1 |
| 8" | URM | 1 | ALONG GRID S BTWN GRID 0.1 & 0.3 | BEHIND PRECAST WEST MECH ROOM #1 |
| 8" | URM | 1 | ALONG GRID S BTWN GRID 0.3 & 0.6 | BEHIND PRECAST WEST MECH ROOM #1 |
| 8" | URM | 1 | ALONG GRID 0.1 BTWN GRID L.6 & M | BEHIND PRECAST WEST MECH ROOM #1 |
| 8" | #4@48" | 1 | ALONG GRID 0.1 BTWN GRID M & N | AROUND LOUVER & HSS HEADER WEST MECH ROOM #1 |
| 8" | #4@48" | 1 | ALONG GRID 0.1 BTWN GRID N & P | AROUND LOUVER & HSS HEADER WEST MECH ROOM #1 |
| 8" | #4@48" | 1 | ALONG GRID 0.1 BTWN GRID P & Q | AROUND LOUVER & HSS HEADER WEST MECH ROOM #1 |
| 8" | #4@48" | 1 | ALONG GRID 0.1 BTWN GRID Q & R | AROUND LOUVER & HSS HEADER WEST MECH ROOM #1 |
| 8" | #4@48" | 1 | ALONG GRID P BTWN GRID 24.5 & 26.2 | AROUND LOUVER & HSS HEADER; EAST MECH ROOM #2 |
| 8" | URM | 1 | ALONG GRID U BTWN GRID 23 & 24.5 | BEHIND PRECAST; EAST MECH ROOM #2 |
| 8" | URM | 1 | ALONG GRID U BTWN GRID 24.5 & 26.2 | BEHIND PRECAST; EAST MECH ROOM #2 |
| 8" | #4@48" | 1 | ALONG GRID 28.1 BTWN GRID Q & R | AROUND LOUVER & HSS HEADER; EAST MECH ROOM #2 |
| 8" | #4@48" | 1 | ALONG GRID 28.1 BTWN GRID R & S | AROUND LOUVER & HSS HEADER; EAST MECH ROOM #2 |
| 8" | #4@48" | 1 | ALONG GRID 28.1 BTWN GRID S & U | AROUND LOUVER & HSS HEADER; EAST MECH ROOM #2 |
| 8" | #4@32" | 1 | ALONG GRID AE BTWN GRID 19 & 20 | AROUND LOUVER & HSS HEADER; NORTH MECH ROOM #3 |
| 8" | #6@32" | 1 | ALONG GRID AE BTWN GRID 20 & 21 | EXTERIOR WALL; NORTH MECH ROOM #3 |
| 8" | #4@32" | 1 | ALONG GRID AE BTWN GRID 21 & 23 | AROUND LOUVER & HSS HEADER; NORTH MECH ROOM #3 |
| 8" | #6@32" | 1 | ALONG GRID AE BTWN GRID 23 & 25 | EXTERIOR WALL; NORTH MECH ROOM #3 |
| 8" | #4@32" | 1 | ALONG GRID AE BTWN GRID 25 & 25.9 | AROUND LOUVER & HSS HEADER; NORTH MECH ROOM #3 |

### NON-LOAD BEARING CMU WALL SCHEDULE (CON'T)

| WALL THICKNESS | WALL REINF | LEVEL | LOCATION | REMARKS |
|---|---|---|---|---|
| 8" | URM | 1 | ALONG GRID 19 BTWN GRID AE & AD | BEHIND PRECAST; NORTH MECH ROOM #3 |
| 8" | #4@48" | 1 | ALONG GRID 19 BTWN GRID AD & AB | AROUND LOUVER & HSS HEADER; NORTH MECH ROOM #3 |
| 8" | URM | 1 | ALONG GRID 28 BTWN GRID AE & AD | BEHIND PRECAST; NORTH MECH ROOM #3 |
| 8" | #4@48" | 1 | ALONG GRID 28 BTWN GRID AB & A.8 | AROUND LOUVER & HSS HEADER; NORTH MECH ROOM #3 |
| | | | | |
| 8" | #5@48" | 2 | ALONG GRID A BTWN GRID 5.3 & 5.8 | PAVILION A |
| 8" | #5@48" | 2 | ALONG GRID 5.8 BTWN GRID A & C | PAVILION A |
| 8" | #5@48" | 2 | ALONG GRID V BTWN GRID 5.3 & 5.8 | PAVILION A |
| 8" | #5@48" | 2 | ALONG GRID 5.8 BTWN GRID T & V | PAVILION A |
| 8" | #5@48" | 2 | ALONG GRID A BTWN GRID 11.3 & 11.8 | PAVILION B |
| 8" | #5@48" | 2 | ALONG GRID 11.8 BTWN GRID A & C | PAVILION B |
| 8" | #5@48" | 2 | ALONG GRID V BTWN GRID 11.3 & 11.8 | PAVILION B |
| 8" | #5@48" | 2 | ALONG GRID 11.8 BTWN GRID T & V | PAVILION B |
| 8" | #5@48" | 2 | ALONG GRID A BTWN GRID 17.3 & 17.8 | PAVILION C |
| 8" | #5@48" | 2 | ALONG GRID 17.8 BTWN GRID A & C | PAVILION C |
| 8" | #5@48" | 2 | ALONG GRID V BTWN GRID 17.3 & 17.8 | PAVILION C |
| 8" | #5@48" | 2 | ALONG GRID 17.8 BTWN GRID T & V | PAVILION C |
| | | | | |
| 8" | #5@48" | 3–7 | ALONG GRID A BTWN GRID 5.3 & 5.8 | PAVILION A |
| 8" | #5@48" | 3–7 | ALONG GRID 5.8 BTWN GRID A & C | PAVILION A |
| 8" | #5@48" | 3–7 | ALONG GRID 4 BTWN GRID K & K.6 | PAVILION A |
| 8" | #5@48" | 3–7 | ALONG GRID 6.3 BTWN GRID L.2 & L.7 | PAVILION A |
| 8" | #5@48" | 3–7 | ALONG GRID L.2 BTWN GRID 6.3 & 7 | PAVILION A |
| 8" | #5@48" | 3–7 | ALONG GRID L.7 BTWN GRID 6.3 & 7 | PAVILION A |
| 8" | #5@48" | 3–7 | ALONG GRID V BTWN GRID 5.3 & 5.8 | PAVILION A |
| 8" | #5@48" | 3–7 | ALONG GRID 5.8 BTWN GRID T & V | PAVILION A |
| 8" | #5@48" | 3–7 | ALONG GRID A BTWN GRID 11.3 & 11.8 | PAVILION B |
| 8" | #5@48" | 3–7 | ALONG GRID 11.8 BTWN GRID A & C | PAVILION B |
| 8" | #5@48" | 3–7 | ALONG GRID 10 BTWN GRID K & K.6 | PAVILION B |
| 8" | #5@48" | 3–7 | ALONG GRID 12.3 BTWN GRID L.2 & L.7 | PAVILION B |
| 8" | #5@48" | 3–7 | ALONG GRID L.2 BTWN GRID 12.3 & 13 | PAVILION B |
| 8" | #5@48" | 3–7 | ALONG GRID L.7 BTWN GRID 12.3 & 13 | PAVILION B |
| 8" | #5@48" | 3–7 | ALONG GRID V BTWN GRID 11.3 & 11.8 | PAVILION B |
| 8" | #5@48" | 3–7 | ALONG GRID 11.8 BTWN GRID T & V | PAVILION B |
| 8" | #5@48" | 3–7 | ALONG GRID A BTWN GRID 17.3 & 17.8 | PAVILION C |
| 8" | #5@48" | 3–7 | ALONG GRID 17.8 BTWN GRID A & C | PAVILION C |
| 8" | #5@48" | 3–7 | ALONG GRID 16 BTWN GRID K & K.6 | PAVILION C |
| 8" | #5@48" | 3–7 | ALONG GRID 18.3 BTWN GRID L.2 & L.7 | PAVILION C |
| 8" | #5@48" | 3–7 | ALONG GRID L.2 BTWN GRID 18.3 & 19 | PAVILION C |
| 8" | #5@48" | 3–7 | ALONG GRID L.7 BTWN GRID 18.3 & 19 | PAVILION C |
| 8" | #5@48" | 3–7 | ALONG GRID V BTWN GRID 17.3 & 17.8 | PAVILION C |
| 8" | #5@48" | 3–7 | ALONG GRID 17.8 BTWN GRID T & V | PAVILION C |
| | | | | |
| 8" | #5@32" | 8 | ALONG GRID A BTWN GRID 5.3 & 5.8 | PAVILION A |
| 8" | #5@32" | 8 | ALONG GRID 5.8 BTWN GRID A & C | PAVILION A |
| 8" | #5@32" | 8 | ALONG GRID 4 BTWN GRID K & K.6 | PAVILION A |
| 8" | #5@32" | 8 | ALONG GRID 6.3 BTWN GRID L.2 & L.7 | PAVILION A |
| 8" | #5@32" | 8 | ALONG GRID L.2 BTWN GRID 6.3 & 7 | PAVILION A |
| 8" | #5@32" | 8 | ALONG GRID L.7 BTWN GRID 6.3 & 7 | PAVILION A |
| 8" | #5@32" | 8 | ALONG GRID V BTWN GRID 5.3 & 5.8 | PAVILION A |
| 8" | #5@32" | 8 | ALONG GRID 5.8 BTWN GRID T & V | PAVILION A |
| 8" | #5@32" | 8 | ALONG GRID A BTWN GRID 11.3 & 11.8 | PAVILION B |
| 8" | #5@32" | 8 | ALONG GRID 11.8 BTWN GRID A & C | PAVILION B |
| 8" | #5@32" | 8 | ALONG GRID 10 BTWN GRID K & K.6 | PAVILION B |
| 8" | #5@32" | 8 | ALONG GRID 12.3 BTWN GRID L.2 & L.7 | PAVILION B |
| 8" | #5@32" | 8 | ALONG GRID L.2 BTWN GRID 12.3 & 13 | PAVILION B |
| 8" | #5@32" | 8 | ALONG GRID L.7 BTWN GRID 12.3 & 13 | PAVILION B |
| 8" | #5@32" | 8 | ALONG GRID V BTWN GRID 11.3 & 11.8 | PAVILION B |
| 8" | #5@32" | 8 | ALONG GRID 11.8 BTWN GRID T & V | PAVILION B |
| 8" | #5@32" | 8 | ALONG GRID A BTWN GRID 17.3 & 17.8 | PAVILION C |
| 8" | #5@32" | 8 | ALONG GRID 17.8 BTWN GRID A & C | PAVILION C |
| 8" | #5@32" | 8 | ALONG GRID 16 BTWN GRID K & K.6 | PAVILION C |
| 8" | #5@32" | 8 | ALONG GRID 18.3 BTWN GRID L.2 & L.7 | PAVILION C |
| 8" | #5@32" | 8 | ALONG GRID L.2 BTWN GRID 18.3 & 19 | PAVILION C |
| 8" | #5@32" | 8 | ALONG GRID L.7 BTWN GRID 18.3 & 19 | PAVILION C |
| 8" | #5@32" | 8 | ALONG GRID V BTWN GRID 17.3 & 17.8 | PAVILION C |
| 8" | #5@32" | 8 | ALONG GRID 17.8 BTWN GRID T & V | PAVILION C |
| | | | | |
| 8" | #5@32" | ROOF | ALONG GRID A BTWN GRID 5.3 & 5.8 | PAVILION A |
| 8" | #5@32" | ROOF | ALONG GRID C BTWN GRID 5.3 & 5.8 | PAVILION A |
| 8" | #5@32" | ROOF | ALONG GRID 5.8 BTWN GRID A & C | PAVILION A |
| 8" | #5@32" | ROOF | ALONG GRID A BTWN GRID 11.3 & 11.8 | PAVILION B |
| 8" | #5@32" | ROOF | ALONG GRID C BTWN GRID 11.3 & 11.8 | PAVILION B |
| 8" | #5@32" | ROOF | ALONG GRID 11.8 BTWN GRID A & C | PAVILION B |
| 8" | #5@32" | ROOF | ALONG GRID A BTWN GRID 17.3 & 17.8 | PAVILION C |
| 8" | #5@32" | ROOF | ALONG GRID C BTWN GRID 17.3 & 17.8 | PAVILION C |
| 8" | #5@32" | ROOF | ALONG GRID 17.8 BTWN GRID A & C | PAVILION C |

NOTE:

1. URM DENOTES UNREINFORCED MASONRY.
2. ALL INTERIOR NON–LOAD BEARING CMU WALLS SHALL BE UNREINFORCED, UNO.
3. SEE S521 FOR TYPICAL LATERAL SUPPORT DETAILS.

PROPERTY OF THE UNITED STATES GOVERNMENT – FOR OFFICIAL USE ONLY. Do not remove this notice. Properly destroy documents when no longer needed.

GSA
GENERAL SERVICES ADMINISTRATION
77 FORSYTH STREET
SUITE 600
ATLANTA, GA 30303
TEL: (404)331–3200

AFRH The Premier Retirement Community for America's Veterans

JACOBS
PROJECT MANAGEMENT CONSULTANT TO THE GENERAL SERVICES ADMINISTRATION

YATES CONSTRUCTION

SFCS Architecture Engineering Planning Interiors

URS
URS CORPORATION
2020 K ST, NW
SUITE 300
WASHINGTON D.C. 20006

ISSUED FOR CONSTRUCTION

CERTIFICATIONS
DISTRICT OF COLUMBIA – MARK W. ZIMPELMAN – 8572 – REGISTERED PROFESSIONAL ENGINEER
12/02/08

KEY PLAN

| MARK | DATE | DESCRIPTION |
|---|---|---|
| 37 | 09/08/08 | ISSUED FOR CONSTRUCTION |
| 60 | 12/02/08 | CIVIL, STRUCT, ARCH REV |

REVISION NOTES

GRAPHIC SCALE

| | |
|---|---|
| A/E CON. NO. | GS–04P–07–EX–C–0099 |
| A/E TASK NO. | |
| CONS. CONTR. | |
| CONS. WORK | |
| PRIME A/E | |
| SUB A/E | |
| CONSTR. CON. | |
| NAME | ARMED FORCES RETIREMENT HOME |
| STREET | 1800 BEACH DRIVE |
| CITY/ST./ZIP | GULFPORT, MS 39507 |
| BUILDING NO. | |
| OTHER BUILDING NOs. | |
| FACILITY CODE | |
| PROJECT TITLE | ARMED FORCES RETIREMENT HOME GULFPORT, MISSISSIPPI |
| PROJECT DESCRIPTION | NEW CONSTRUCTION |
| PROJECT NO. | 31942982 |
| GSA PM | STEVEN SMITH |
| SUBMISSION | ISSUED FOR CONSTRUCTION |
| SUB. DATE | 09/08/2008 |
| DRAWING TITLE | GENERAL NOTES |
| FILE NAME | S–002–N0095730.DWG |
| FLOOR NO. | 00 |
| DRAWN BY | JVS DATE DRAFTED: |
| CHECKED BY | MWZ SHEET SIZE: 34 X 44 |
| DRAWING NO. 37 | S 0 02 |
| | DISCIPLINE SHEET TYPE SEQUENCE |
| | SHEET 000 OF 000 |

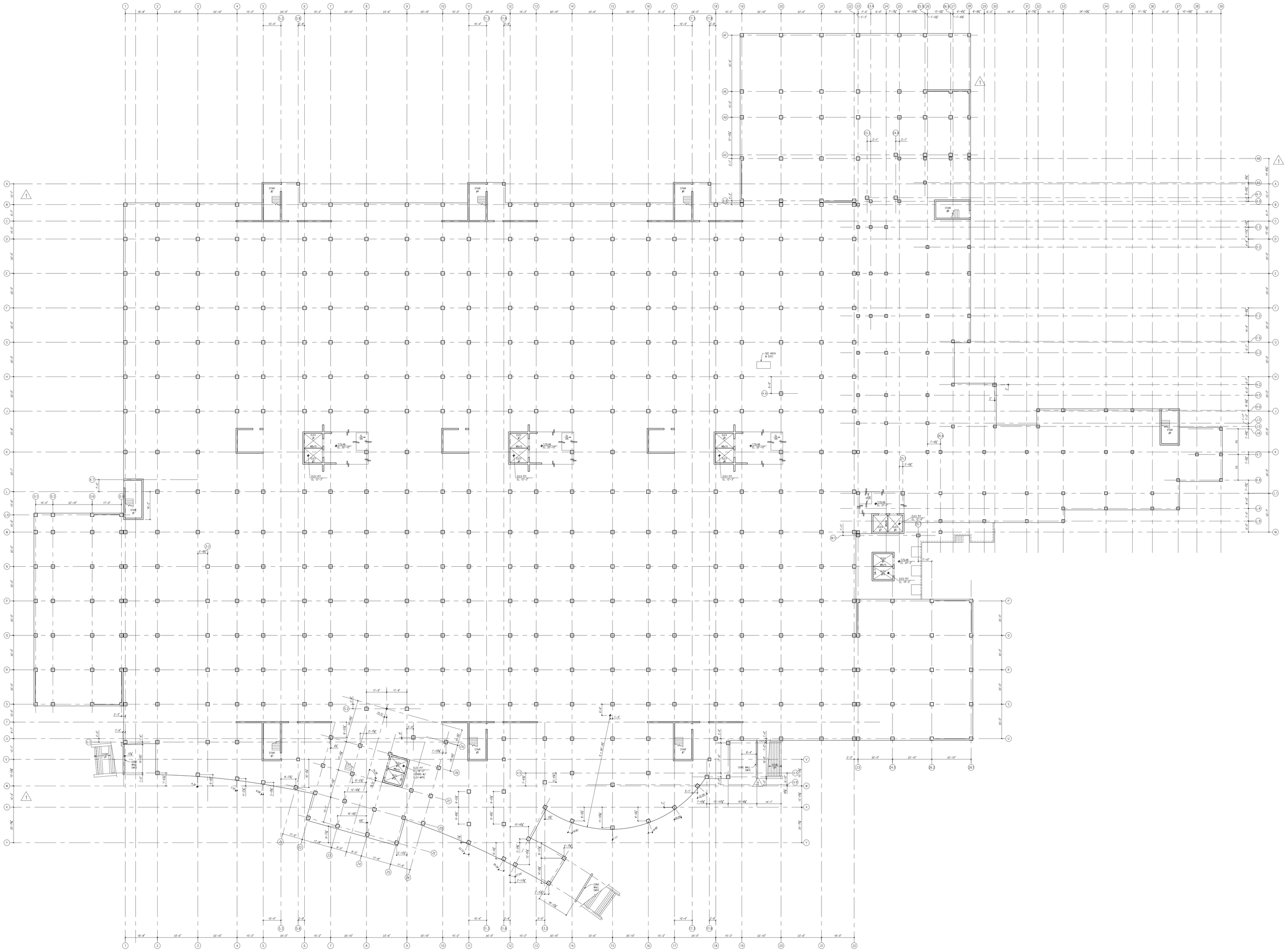

1 S100 **COLUMN LAYOUT PLAN**
1" = 20'-0"


GSA
GENERAL SERVICES ADMINISTRATION
77 FORSYTH STREET
SUITE 600
ATLANTA, GA 30303
TEL: (404)331-3200

AFRH The Premier Retirement Community for America's Veterans

JACOBS
PROJECT MANAGEMENT CONSULTANT TO THE GENERAL SERVICES ADMINISTRATION

YATES CONSTRUCTION

SFCS Architecture Engineering Planning Interiors

URS
URS CORPORATION
2020 K ST, NW
SUITE 300
WASHINGTON D.C. 20006


ISSUED FOR CONSTRUCTION

CERTIFICATIONS

DISTRICT OF COLUMBIA
MARK W. ZIMPELMAN
8572
REGISTERED
PROFESSIONAL ENGINEER
09/08/08

KEY PLAN

N

REVISION NOTES

| MARK | DATE | DESCRIPTION |
|---|---|---|
| | 01/14/08 | COLUMN LAYOUT SUBMISSION |
| | 01/14/08 | ISSUED FOR CONSTRUCTION |
| | 01/15/08 | COLUMN FOUNDATION SUBMISSION |
| 1 | 02/12/08 | REVISION NO. 1 |
| 37 | 09/08/08 | RE-ISSUED FOR CONSTRUCTION |

GRAPHIC SCALE

CONTRACTORS

| | |
|---|---|
| A/E CON. NO. | GS-04P-07-EX-C-0099 |
| A/E TASK NO. | |
| CONS. CONTR. | |
| CONS. WORK | |
| PRIME A/E | |
| SUB A/E | |
| CONSTR. CON. | |

BUILDING

| | |
|---|---|
| NAME | ARMED FORCES RETIREMENT HOME |
| STREET | 1800 BEACH DRIVE |
| CITY/ST./ZIP | GULFPORT, MS 39507 |
| BUILDING NO. | |
| OTHER BUILDING NOs. | |
| FACILITY CODE | |

PROJECT

| | |
|---|---|
| PROJECT TITLE | ARMED FORCES RETIREMENT HOME GULFPORT, MISSISSIPPI |
| PROJECT DESCRIPTION | NEW CONSTRUCTION |
| PROJECT NO. | 31942982 |
| GSA PM | STEVEN SMITH |
| SUBMISSION | ISSUED FOR CONSTRUCTION |
| SUB. DATE | 09/08/2008 |

DRAWING

| | |
|---|---|
| DRAWING TITLE | COLUMN LAYOUT PLAN |
| FILE NAME | S-100-N0095730.DWG |
| FLOOR NO. | 00 |
| DRAWN BY | JVS DATE DRAFTED: 01/14/2008 |
| CHECKED BY | MWZ SHEET SIZE: 34 X 44 |
| DRAWING NO. | S 1 00 (DISCIPLINE SHEET TYPE SEQUENCE) SHEET 000 OF 000 |

PROPERTY OF THE UNITED STATES GOVERNMENT – FOR OFFICIAL USE ONLY. Do not remove this notice. Properly destroy documents when no longer needed.

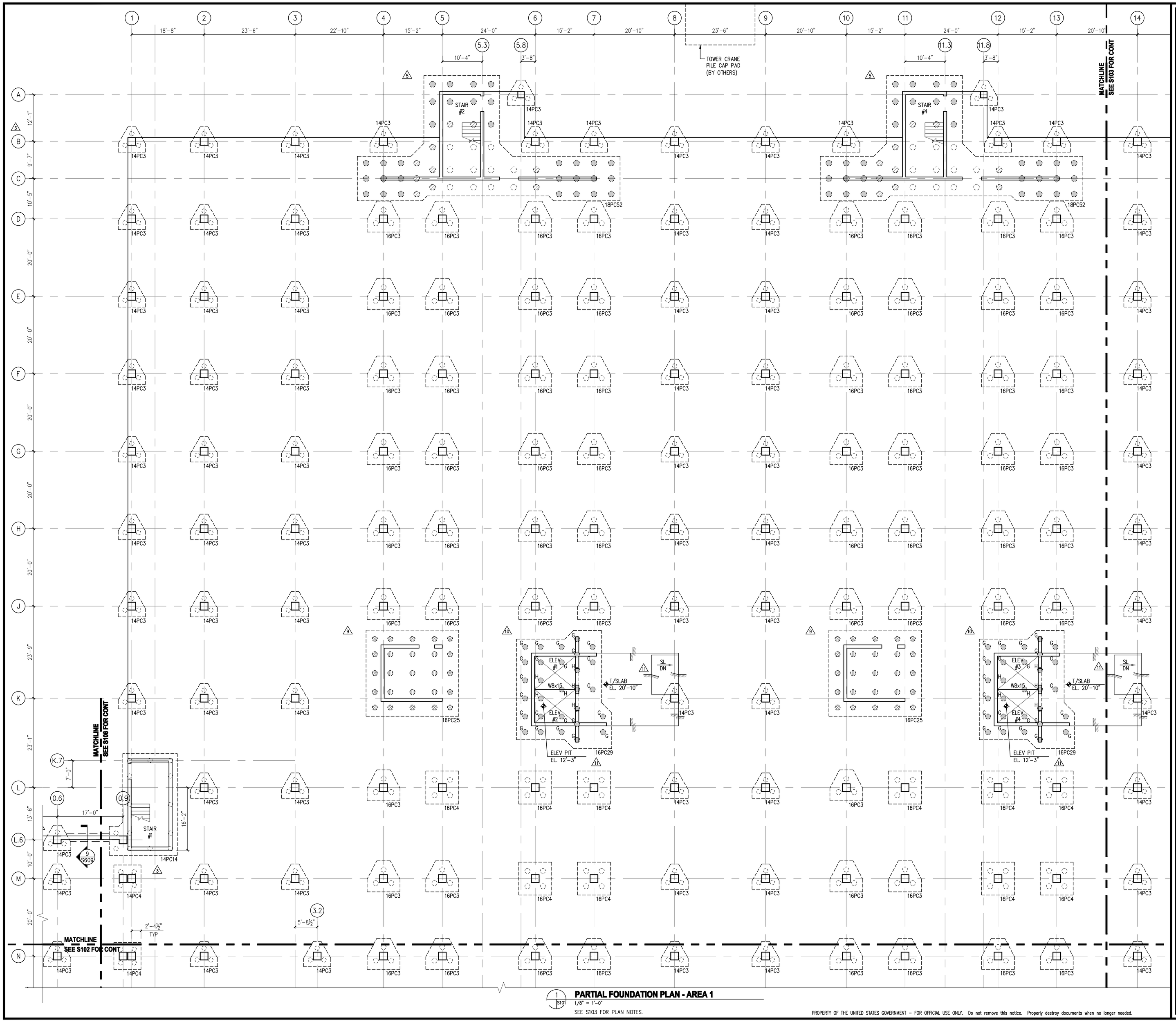


## PARTIAL FOUNDATION PLAN - AREA 1

1/8" = 1'-0"

SEE S103 FOR PLAN NOTES.

PROPERTY OF THE UNITED STATES GOVERNMENT – FOR OFFICIAL USE ONLY. Do not remove this notice. Properly destroy documents when no longer needed.


GSA
GENERAL SERVICES ADMINISTRATION
77 FORSYTH STREET
SUITE 600
ATLANTA, GA 30303
TEL: (404)331-3200

AFRH The Premier Retirement Community for America's Veterans

JACOBS
PROJECT MANAGEMENT CONSULTANT TO THE GENERAL SERVICES ADMINISTRATION

YATES CONSTRUCTION

SFCS Architecture Engineering Planning Interiors

URS
URS CORPORATION
2020 K ST, NW
SUITE 300
WASHINGTON D.C. 20006


ISSUED FOR CONSTRUCTION

CERTIFICATIONS

DISTRICT OF COLUMBIA
MARK W. ZIMPELMAN
8572
REGISTERED PROFESSIONAL ENGINEER
09/08/08

KEY PLAN

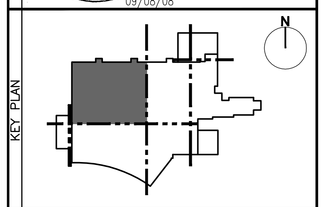


REVISION NOTES

| MARK | DATE | DESCRIPTION |
|---|---|---|
| | 01/15/08 | COLUMN FOUNDATION SUBMISSION |
| | 01/15/08 | ISSUED FOR CONSTRUCTION |
| 3 | 03/07/08 | ADD PILES/PILE CAPS AT EXP JTS |
| 5 | 03/20/08 | ADD 18PC52 |
| 9 | 03/27/08 | ADD 16PC25 & WALL REINF |
| 10 | 04/02/08 | ADD 16PC29 |
| 11 | 04/07/08 | ADD 16PC24, 16PC28 & WALL REINF |
| 37 | 09/08/08 | RE-ISSUED FOR CONSTRUCTION |

GRAPHIC SCALE

CONTRACTORS

| | |
|---|---|
| A/E CON. NO. | GS-04P-07-EX-C-0099 |
| A/E TASK NO. | |
| CONS. CONTR. | |
| CONS. WORK | |
| PRIME A/E | |
| SUB A/E | |
| CONSTR. CON. | |

BUILDING

| | |
|---|---|
| NAME | ARMED FORCES RETIREMENT HOME |
| STREET | 1800 BEACH DRIVE |
| CITY/ST./ZIP | GULFPORT, MS 39507 |
| BUILDING NO. | |
| OTHER BUILDING NOs. | |
| FACILITY CODE | |

PROJECT

| | |
|---|---|
| PROJECT TITLE | ARMED FORCES RETIREMENT HOME GULFPORT, MISSISSIPPI |
| PROJECT DESCRIPTION | NEW CONSTRUCTION |
| PROJECT NO. | 31942982 |
| GSA PM | STEVEN SMITH |
| SUBMISSION | ISSUED FOR CONSTRUCTION |
| SUB. DATE | 09/08/2008 |

DRAWING

| | |
|---|---|
| DRAWING TITLE | PARTIAL FOUNDATION PLAN – AREA 1 |
| FILE NAME | S-101-N0095730.DWG |
| FLOOR NO. | 00 |
| DRAWN BY | JVS DATE DRAFTED: |
| CHECKED BY | MWZ SHEET SIZE: 34 X 44 |
| DRAWING NO. | S 1 01 (DISCIPLINE SHEET TYPE SEQUENCE) |

SHEET 000 OF 000

1 S102 **PARTIAL FOUNDATION PLAN - AREA 2**

1/8" = 1'-0"

SEE S103 FOR PLAN NOTES.

PROPERTY OF THE UNITED STATES GOVERNMENT – FOR OFFICIAL USE ONLY. Do not remove this notice. Properly destroy documents when no longer needed.

GSA
GENERAL SERVICES ADMINISTRATION
77 FORSYTH STREET
SUITE 600
ATLANTA, GA 30303
TEL: (404)331-3200

AFRH The Premier Retirement Community for America's Veterans

JACOBS
PROJECT MANAGEMENT CONSULTANT TO THE GENERAL SERVICES ADMINISTRATION

YATES CONSTRUCTION

SFCS Architecture Engineering Planning Interiors

URS
URS CORPORATION
2020 K ST, NW
SUITE 300
WASHINGTON D.C. 20006

ISSUED FOR CONSTRUCTION

CERTIFICATIONS

DISTRICT OF COLUMBIA
MARK W. ZIMPELMAN
8572
REGISTERED
PROFESSIONAL ENGINEER
09/08/08

KEY PLAN

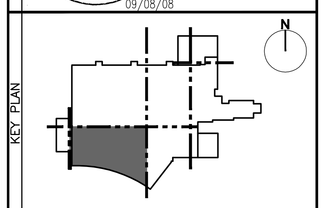

REVISION NOTES

| MARK | DATE | DESCRIPTION |
|---|---|---|
| | 01/15/08 | COLUMN FOUNDATION SUBMISSION |
| | 01/15/08 | ISSUED FOR CONSTRUCTION |
| 3 | 03/07/08 | ADD PILES/PILE CAPS AT EXP JTS |
| 5 | 03/20/08 | ADD 18PC52 |
| 31 | 07/22/08 | REVISED ENTRY PILE LOCATIONS |
| 33 | 07/25/08 | ADD PILE CAP DETAILS |
| 34 | 08/18/08 | REVISED ENTRY & LOADING DOCK |
| 37 | 09/08/08 | RE-ISSUED FOR CONSTRUCTION |

GRAPHIC SCALE

CONTRACTORS

| | |
|---|---|
| A/E CON. NO. | GS-04P-07-EX-C-0099 |
| A/E TASK NO. | |
| CONS. CONTR. | |
| CONS. WORK | |
| PRIME A/E | |
| SUB A/E | |
| CONSTR. CON. | |

BUILDING

| | |
|---|---|
| NAME | ARMED FORCES RETIREMENT HOME |
| STREET | 1800 BEACH DRIVE |
| CITY/ST./ZIP | GULFPORT, MS 39507 |
| BUILDING NO. | |
| OTHER BUILDING NOs. | |
| FACILITY CODE | |

PROJECT

| | |
|---|---|
| PROJECT TITLE | ARMED FORCES RETIREMENT HOME GULFPORT, MISSISSIPPI |
| PROJECT DESCRIPTION | NEW CONSTRUCTION |
| PROJECT NO. | 31942982 |
| GSA PM | STEVEN SMITH |
| SUBMISSION | ISSUED FOR CONSTRUCTION |
| SUB. DATE | 09/08/2008 |

DRAWING

| | |
|---|---|
| DRAWING TITLE | PARTIAL FOUNDATION PLAN – AREA 2 |
| FILE NAME | S-102-N0095730.DWG |
| FLOOR NO. | 00 |
| DRAWN BY | JVS DATE DRAFTED: |
| CHECKED BY | MWZ SHEET SIZE: 34 X 44 |
| DRAWING NO. | S 1 02 (DISCIPLINE SHEET TYPE SEQUENCE) |

SHEET 000 OF 000

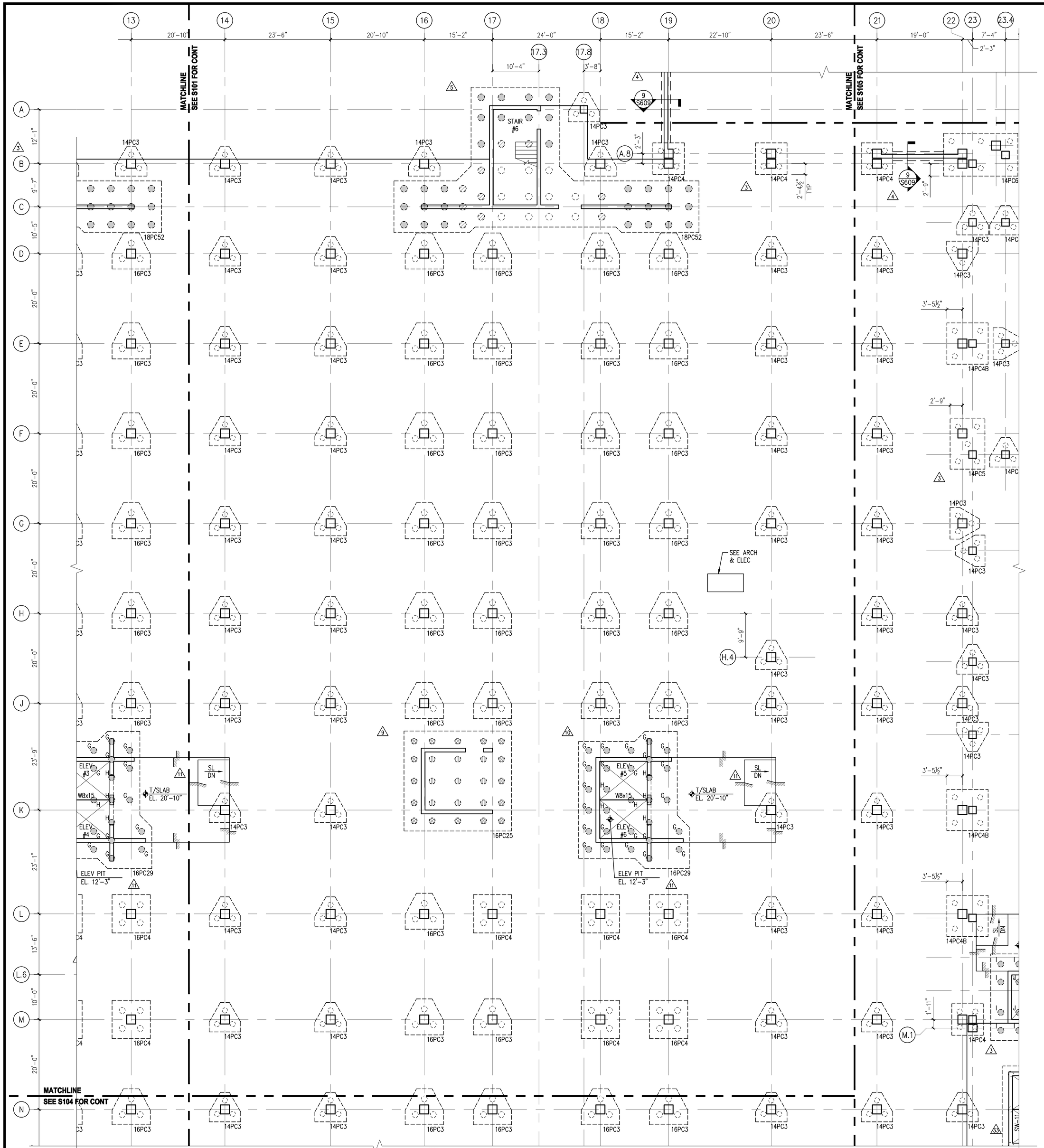


## PARTIAL FOUNDATION PLAN - AREA 3

1/8" = 1'-0"

PLAN NOTES:

1. T/ SLAB EL. VARIES, SEE ARCH FOR SLOPES AND HP & FD (FLOOR DRAINS).
2. FLOOR CONSTRUCTION CONSISTS OF 5" THICK CONCRETE SLAB-ON-GRADE WITH 6x6-W2.0xW2.0 WWF. PROVIDE SUPPORT CHAIRS TO HOLD WELDED WIRE FABRIC IN POSITION DURING CONCRETE PLACEMENT.
3. AUGER-CAST PILE DIAMETER VARIES, SEE PLAN.
   - "14PC3" DENOTES REINFORCED CONCRETE PILE CAP SUPPORTED BY (3)-14" DIAMETER AUGER-CAST PILES.
   - "14PC4" DENOTES REINFORCED CONCRETE PILE CAP SUPPORTED BY (4)-14" DIAMETER AUGER-CAST PILES.
   - "16PC3" DENOTES REINFORCED CONCRETE PILE CAP SUPPORTED BY (3)-16" DIAMETER AUGER-CAST PILES.
   - "16PC4" DENOTES REINFORCED CONCRETE PILE CAP SUPPORTED BY (4)-16" DIAMETER AUGER-CAST PILES.
   - "18PC52" DENOTES REINFORCED CONCRETE PILE CAP SUPPORTED BY (52)-18" DIAMETER AUGER-CAST PILES.
   - SEE PLAN AND DETAILS ON S609 & S610 FOR ADDITIONAL PILE CAP CONFIGURATIONS, LAYOUTS AND REINFORCEMENT.
4. B/AUGER-CAST PILE EL. TO BE DETERMINED IN THE FIELD, ESTIMATED PILE LENGTH IS 75' ±.
5. T/PILE CAP EL. 18'-6", UNO.
6. CENTER ALL PILE CAPS, PIERS, WALLS AND COLUMNS ON GRIDLINES, UNO.
7. COORDINATE ALL EXISTING AND NEW UNDERGROUND UTILITIES WITH CIVIL AND MEP DRAWINGS.
8. ◎ INDICATES TENSION PILE "A" WITH FULL-LENGTH REINFORCEMENT. SEE S609 & S610.
9. ◎ INDICATES TENSION PILE "B" WITH FULL-LENGTH REINFORCEMENT. SEE S609 & S610.
10. ◎ INDICATES TENSION PILE "C" WITH FULL-LENGTH REINFORCEMENT. SEE S609 & S610.
11. ◎ INDICATES TENSION PILE "D" WITH FULL-LENGTH REINFORCEMENT. SEE S609 & S610.
12. E ◎ INDICATES TENSION PILE "E" WITH FULL-LENGTH REINFORCEMENT. SEE S609 & S610.
13. F ◎ INDICATES TENSION PILE "F" WITH FULL-LENGTH REINFORCEMENT. SEE S609 & S610.
14. G ◎ INDICATES TENSION PILE "G" WITH FULL-LENGTH REINFORCEMENT. SEE S609 & S610.
15. H ◎ INDICATES TENSION PILE "H" WITH FULL-LENGTH REINFORCEMENT. SEE S609 & S610.
16. I ◎ INDICATES TENSION PILE "I" WITH FULL-LENGTH REINFORCEMENT. SEE S609 & S610.
17. J ◎ INDICATES TENSION PILE "J" WITH FULL-LENGTH REINFORCEMENT. SEE S609 & S610.
18. SEE S601 TO S608 FOR COLUMN SCHEDULE AND DETAILS.
19. INFORMATION CONTAINED ON THIS DRAWING IS BOUND BY THE MATCHLINE. FOR INFORMATION BEYOND THE MATCHLINE, SEE ADJACENT AREA.

PROPERTY OF THE UNITED STATES GOVERNMENT – FOR OFFICIAL USE ONLY. Do not remove this notice. Properly destroy documents when no longer needed.

GSA
GENERAL SERVICES ADMINISTRATION
77 FORSYTH STREET
SUITE 600
ATLANTA, GA 30303
TEL: (404)331-3200

AFRH The Premier Retirement Community for America's Veterans

JACOBS
PROJECT MANAGEMENT CONSULTANT TO THE GENERAL SERVICES ADMINISTRATION

YATES CONSTRUCTION

SFCS Architecture Engineering Planning Interiors

URS
URS CORPORATION
2020 K ST, NW
SUITE 300
WASHINGTON D.C. 20006

ISSUED FOR CONSTRUCTION

CERTIFICATIONS

DISTRICT OF COLUMBIA
MARK W. ZIMPELMAN
8572
REGISTERED PROFESSIONAL ENGINEER
09/08/08

KEY PLAN

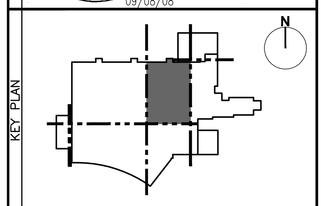


REVISION NOTES

| MARK | DATE | DESCRIPTION |
|---|---|---|
| | 01/15/08 | COLUMN FOUNDATION SUBMISSION |
| | 01/15/08 | ISSUED FOR CONSTRUCTION |
| 1 | 03/07/08 | ADD PILES/PILE CAPS AT EXP JTS |
| 2 | 03/20/08 | ADD 18PC52 |
| 3 | 03/27/08 | ADD 16PC25 & WALL REINF |
| 4 | 04/02/08 | ADD 16PC29 |
| 5 | 04/07/08 | ADD 16PC24, 16PC28 & WALL REINF |
| 6 | 09/08/08 | RE-ISSUED FOR CONSTRUCTION |

GRAPHIC SCALE

CONTRACTORS

| | |
|---|---|
| A/E CON. NO. | GS-04P-07-EX-C-0099 |
| A/E TASK NO. | |
| CONS. CONTR. | |
| CONS. WORK | |
| PRIME A/E | |
| SUB A/E | |
| CONSTR. CON. | |

BUILDING

| | |
|---|---|
| NAME | ARMED FORCES RETIREMENT HOME |
| STREET | 1800 BEACH DRIVE |
| CITY/ST./ZIP | GULFPORT, MS 39507 |
| BUILDING NO. | |
| OTHER BUILDING NOs. | |
| FACILITY CODE | |

PROJECT

| | |
|---|---|
| PROJECT TITLE | ARMED FORCES RETIREMENT HOME GULFPORT, MISSISSIPPI |
| PROJECT DESCRIPTION | NEW CONSTRUCTION |
| PROJECT NO. | 31942982 |
| GSA PM | STEVEN SMITH |
| SUBMISSION | ISSUED FOR CONSTRUCTION |
| SUB. DATE | 09/08/2008 |

DRAWING

| | |
|---|---|
| DRAWING TITLE | PARTIAL FOUNDATION PLAN – AREA 3 |
| FILE NAME | S-103-N0095730.DWG |
| FLOOR NO. | 00 |
| DRAWN BY | JVS DATE DRAFTED: |
| CHECKED BY | MWZ SHEET SIZE: 34 X 44 |
| DRAWING NO. | S 1 03 (DISCIPLINE SHEET TYPE SEQUENCE) |
| | SHEET 000 OF 000 |

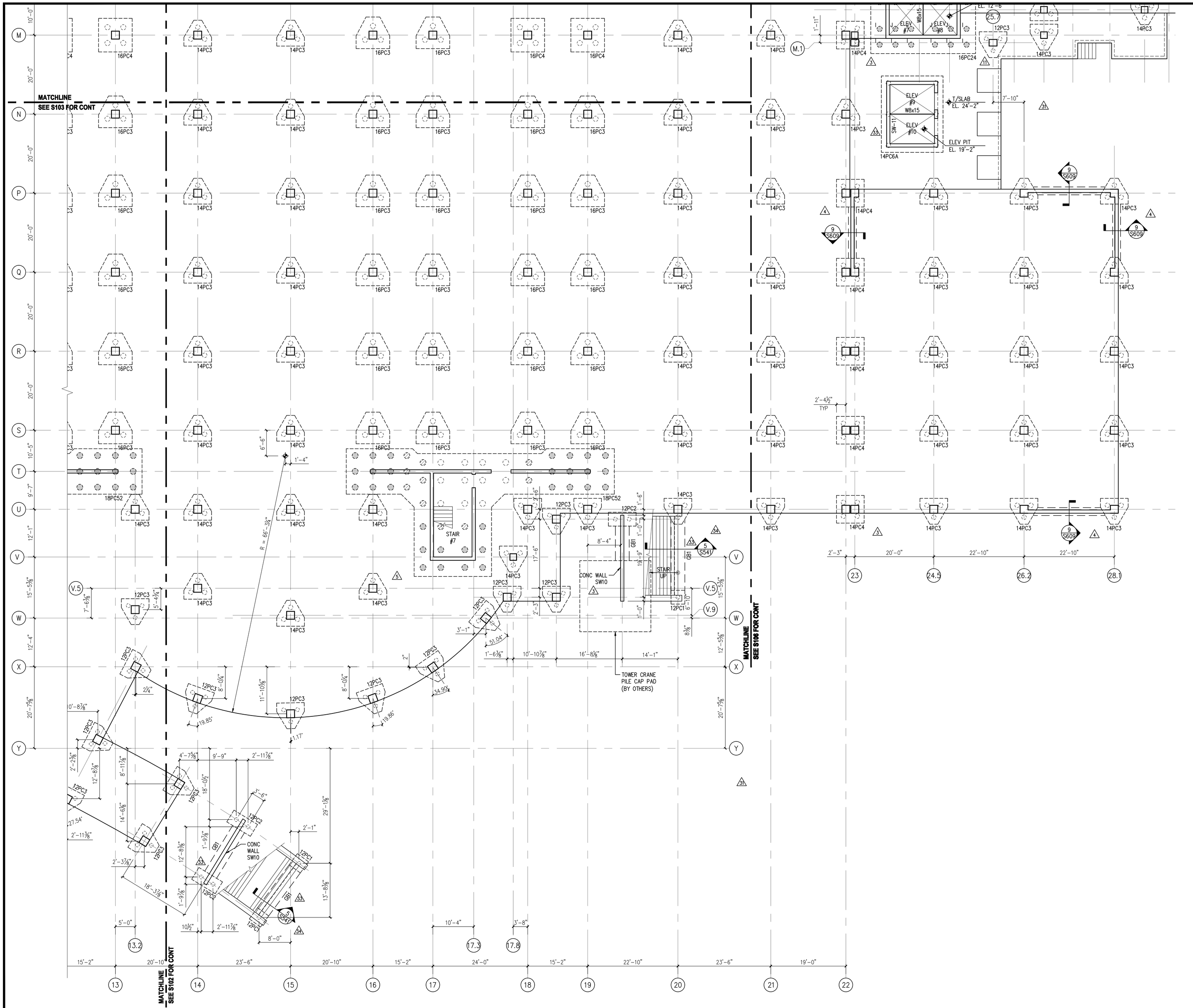


1 S104 **PARTIAL FOUNDATION PLAN - AREA 4**

1/8" = 1'-0"

SEE S103 FOR PLAN NOTES.

PROPERTY OF THE UNITED STATES GOVERNMENT – FOR OFFICIAL USE ONLY. Do not remove this notice. Properly destroy documents when no longer needed.

GSA
GENERAL SERVICES ADMINISTRATION
77 FORSYTH STREET
SUITE 600
ATLANTA, GA 30303
TEL: (404)331-3200

AFRH The Premier Retirement Community for America's Veterans

JACOBS
PROJECT MANAGEMENT CONSULTANT TO THE GENERAL SERVICES ADMINISTRATION

YATES CONSTRUCTION

SFCS Architecture Engineering Planning Interiors

URS
URS CORPORATION
2020 K ST, NW
SUITE 300
WASHINGTON D.C. 20006

ISSUED FOR CONSTRUCTION

CERTIFICATIONS

DISTRICT OF COLUMBIA
MARK W. ZIMPELMAN
8572
REGISTERED PROFESSIONAL ENGINEER
09/08/08

KEY PLAN

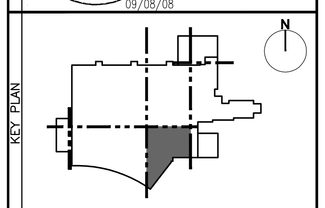

REVISION NOTES

| MARK | DATE | DESCRIPTION |
|---|---|---|
| | 01/15/08 | COLUMN FOUNDATION SUBMISSION |
| | 01/15/08 | ISSUED FOR CONSTRUCTION |
| 3 | 03/07/08 | ADD PILES/PILE CAPS AT EXP JTS |
| 5 | 03/20/08 | ADD 18PC52 |
| 31 | 07/22/08 | REVISED ENTRY PILE LOCATIONS |
| 33 | 07/25/08 | ADD PILE CAP DETAILS |
| 34 | 08/18/08 | REVISED ENTRY & LOADING DOCK |
| 37 | 09/08/08 | RE-ISSUED FOR CONSTRUCTION |

GRAPHIC SCALE

CONTRACTORS

| | |
|---|---|
| A/E CON. NO. | GS-04P-07-EX-C-0099 |
| A/E TASK NO. | |
| CONS. CONTR. | |
| CONS. WORK | |
| PRIME A/E | |
| SUB A/E | |
| CONSTR. CON. | |

BUILDING

| | |
|---|---|
| NAME | ARMED FORCES RETIREMENT HOME |
| STREET | 1800 BEACH DRIVE |
| CITY/ST./ZIP | GULFPORT, MS 39507 |
| BUILDING NO. | |
| OTHER BUILDING NOs. | |
| FACILITY CODE | |

PROJECT

| | |
|---|---|
| PROJECT TITLE | ARMED FORCES RETIREMENT HOME GULFPORT, MISSISSIPPI |
| PROJECT DESCRIPTION | NEW CONSTRUCTION |
| PROJECT NO. | 31942982 |
| GSA PM | STEVEN SMITH |
| SUBMISSION | ISSUED FOR CONSTRUCTION |
| SUB. DATE | 09/08/2008 |

DRAWING

| | |
|---|---|
| DRAWING TITLE | PARTIAL FOUNDATION PLAN – AREA 4 |
| FILE NAME | S-104-N0095730.DWG |
| FLOOR NO. | 00 |
| DRAWN BY | JVS DATE DRAFTED: |
| CHECKED BY | MWZ SHEET SIZE: 34 X 44 |
| DRAWING NO. | S 1 04 (DISCIPLINE SHEET TYPE SEQUENCE) |

SHEET 000 OF 000

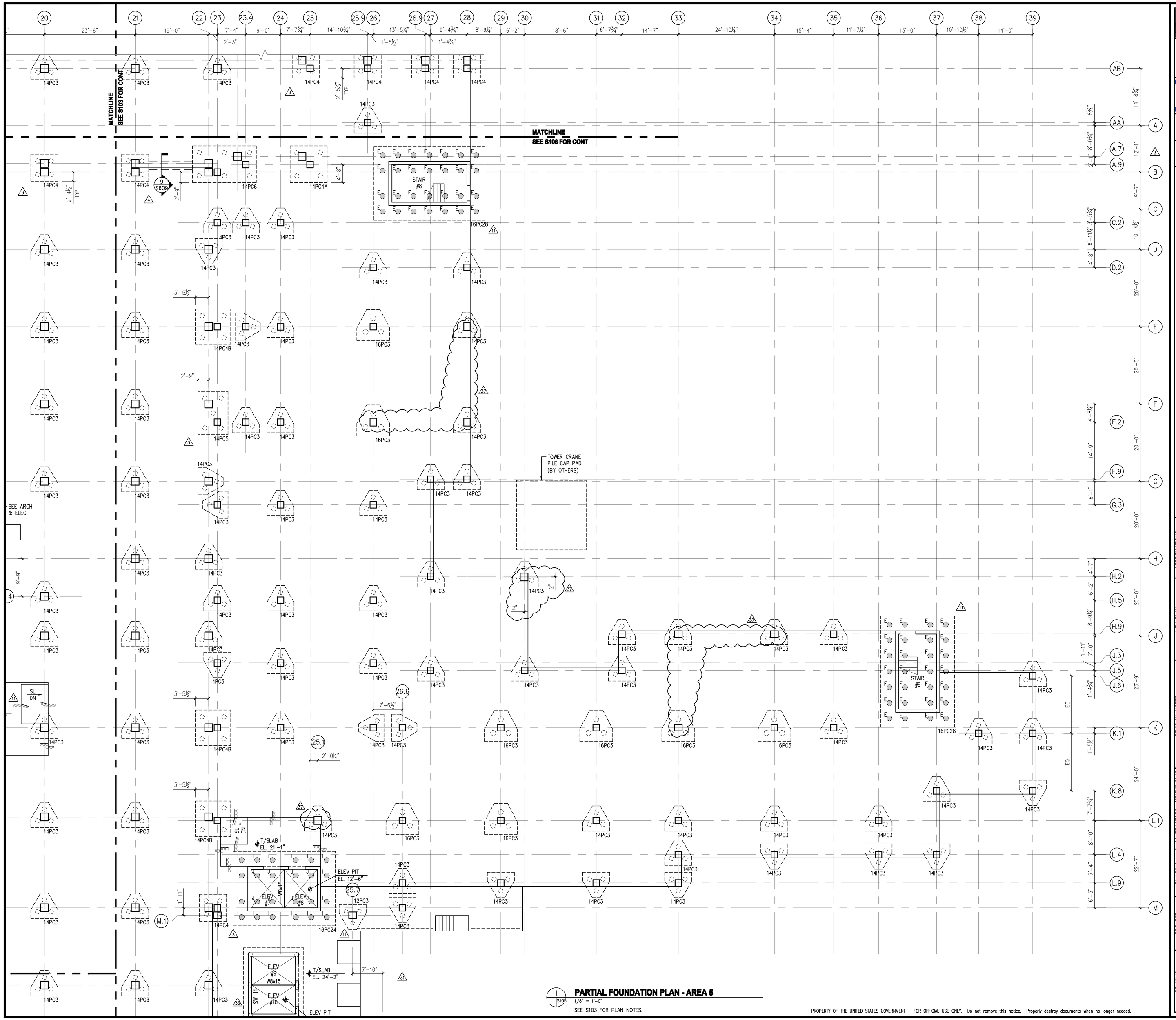


1 S105 **PARTIAL FOUNDATION PLAN - AREA 5**

1/8" = 1'-0"

SEE S103 FOR PLAN NOTES.

PROPERTY OF THE UNITED STATES GOVERNMENT – FOR OFFICIAL USE ONLY. Do not remove this notice. Properly destroy documents when no longer needed.

GENERAL SERVICES ADMINISTRATION
77 FORSYTH STREET
SUITE 600
ATLANTA, GA 30303
TEL: (404)331-3200

AFRH The Premier Retirement Community for America's Veterans

JACOBS
PROJECT MANAGEMENT CONSULTANT TO THE GENERAL SERVICES ADMINISTRATION

YATES CONSTRUCTION

SFCS Architecture Engineering Planning Interiors

URS CORPORATION
2020 K ST, NW
SUITE 300
WASHINGTON D.C. 20006

ISSUED FOR CONSTRUCTION

CERTIFICATIONS

DISTRICT OF COLUMBIA
MARK W. ZIMPELMAN
8572
REGISTERED PROFESSIONAL ENGINEER
09/08/08

KEY PLAN

N

REVISION NOTES

| MARK | DATE | DESCRIPTION |
|---|---|---|
| | 01/15/08 | COLUMN FOUNDATION SUBMISSION |
| | 01/15/08 | ISSUED FOR CONSTRUCTION |
| 3 | 03/07/08 | ADD PILES/PILE CAPS AT EXP JTS |
| 11 | 04/07/08 | ADD 16PC24, 16PC28 & WALL REINF |
| 37 | 09/08/08 | RE-ISSUED FOR CONSTRUCTION |

DRAWING SCALE

CONTRACTORS

| | |
|---|---|
| A/E CON. NO. | GS-04P-07-EX-C-0099 |
| A/E TASK NO. | |
| CONS. CONTR. | |
| CONS. WORK | |
| PRIME A/E | |
| SUB A/E | |
| CONSTR. CON. | |

BUILDING

| | |
|---|---|
| NAME | ARMED FORCES RETIREMENT HOME |
| STREET | 1800 BEACH DRIVE |
| CITY/ST./ZIP | GULFPORT, MS 39507 |
| BUILDING NO. | |
| OTHER BUILDING NOs. | |
| FACILITY CODE | |

PROJECT

| | |
|---|---|
| PROJECT TITLE | ARMED FORCES RETIREMENT HOME GULFPORT, MISSISSIPPI |
| PROJECT DESCRIPTION | NEW CONSTRUCTION |
| PROJECT NO. | 31942982 |
| GSA PM | STEVEN SMITH |
| SUBMISSION | ISSUED FOR CONSTRUCTION |
| SUB. DATE | 09/08/2008 |

DRAWING

| | |
|---|---|
| DRAWING TITLE | PARTIAL FOUNDATION PLAN – AREA 5 |
| FILE NAME | S-105-N0095730.DWG |
| FLOOR NO. | 00 |
| DRAWN BY | JVS DATE DRAFTED: |
| CHECKED BY | MWZ SHEET SIZE: 34 X 44 |
| DRAWING NO. | S 1 05 (DISCIPLINE / SHEET TYPE / SEQUENCE) |
| | SHEET 000 OF 000 |

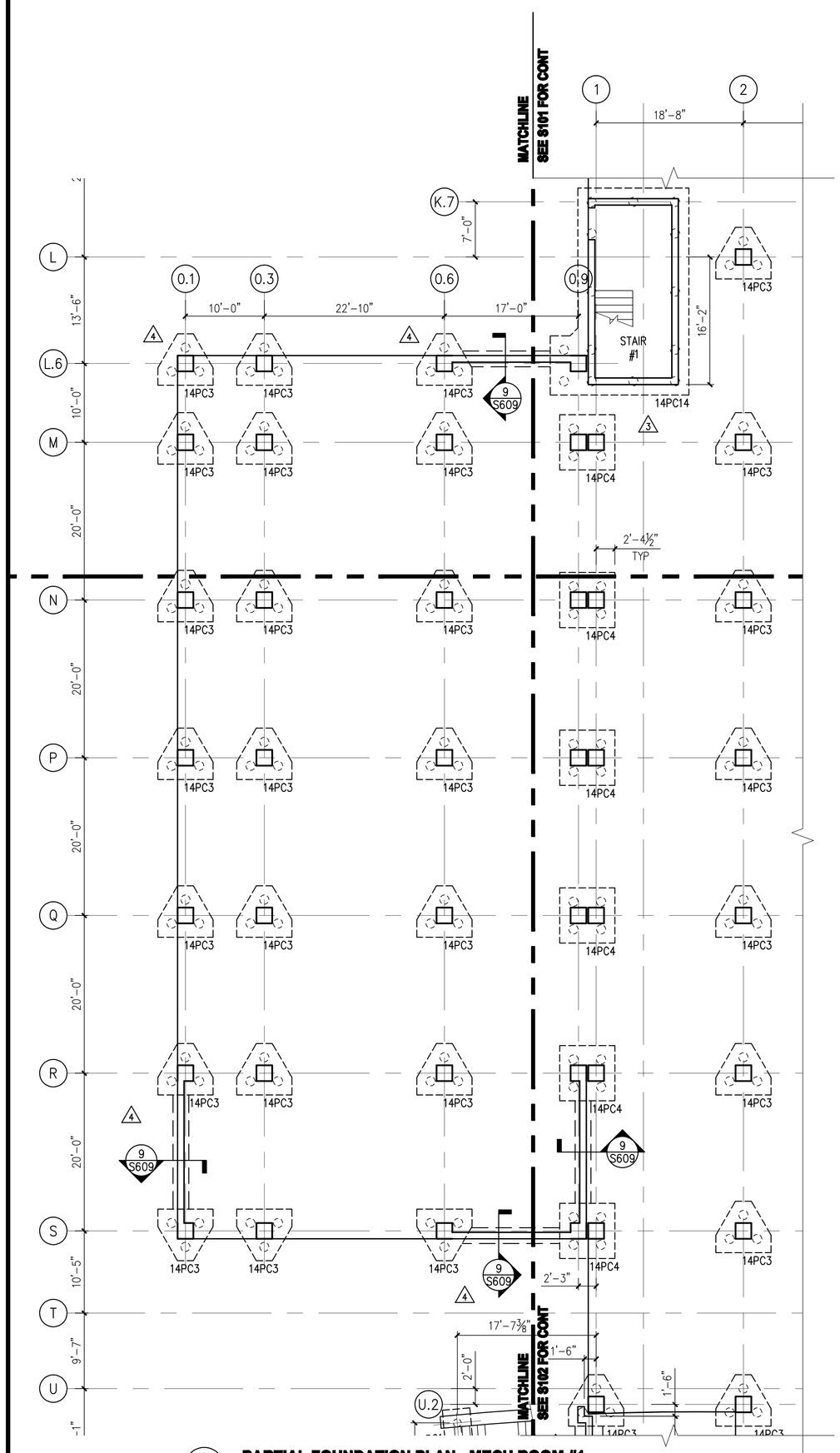


1 S106 **PARTIAL FOUNDATION PLAN - MECH ROOM #1**
1/8" = 1'-0"
SEE S103 FOR PLAN NOTES.

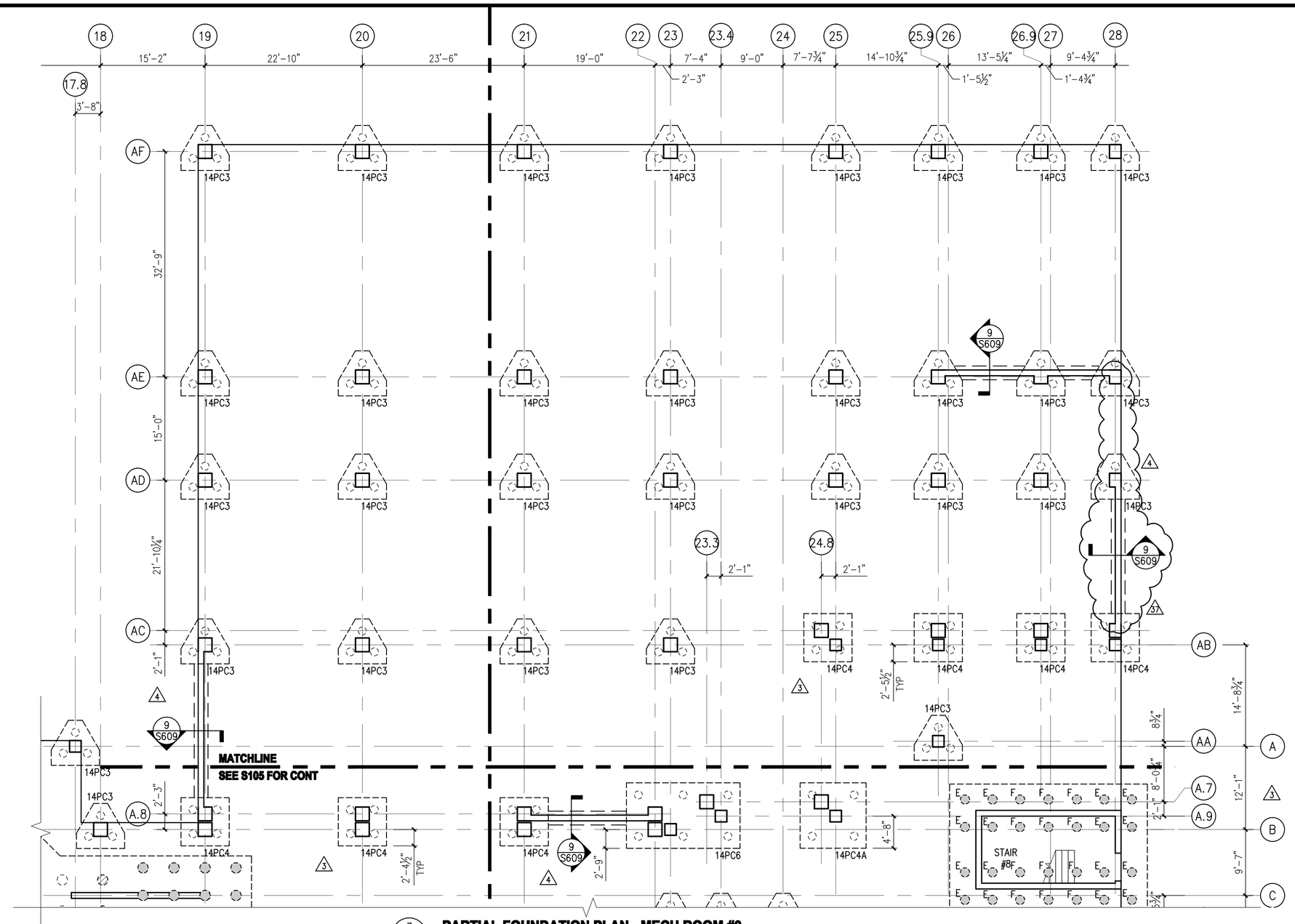


3 S106 **PARTIAL FOUNDATION PLAN - MECH ROOM #3**
1/8" = 1'-0"
SEE S103 FOR PLAN NOTES.

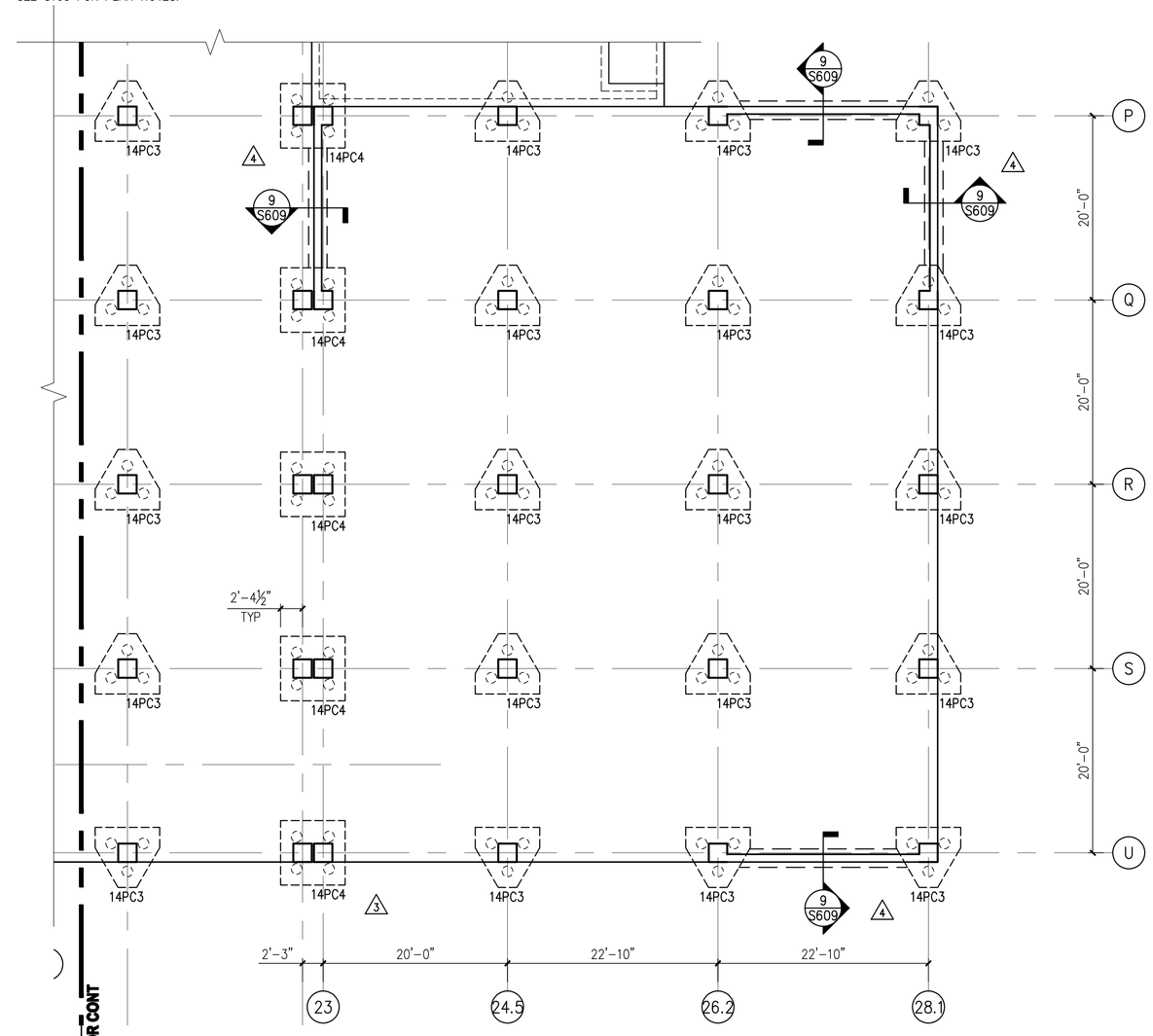


2 S106 **PARTIAL FOUNDATION PLAN - MECH ROOM #2**
1/8" = 1'-0"
SEE S103 FOR PLAN NOTES.

PROPERTY OF THE UNITED STATES GOVERNMENT – FOR OFFICIAL USE ONLY. Do not remove this notice. Properly destroy documents when no longer needed.

GSA
GENERAL SERVICES ADMINISTRATION
77 FORSYTH STREET
SUITE 600
ATLANTA, GA 30303
TEL: (404)331-3200

AFRH The Premier Retirement Community for America's Veterans

JACOBS
PROJECT MANAGEMENT CONSULTANT TO THE GENERAL SERVICES ADMINISTRATION

YATES CONSTRUCTION

SFCS Architecture Engineering Planning Interiors

URS
URS CORPORATION
2020 K ST, NW
SUITE 300
WASHINGTON D.C. 20006

ISSUED FOR CONSTRUCTION

CERTIFICATIONS

DISTRICT OF COLUMBIA
MARK W. ZIMPFRAMAN
8572
REGISTERED
PROFESSIONAL ENGINEER
09/08/08

KEY PLAN

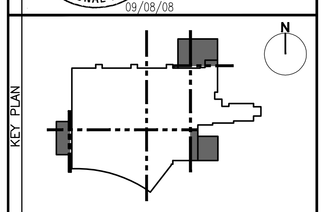


REVISION NOTES

| MARK | DATE | DESCRIPTION |
|---|---|---|
| | 01/15/08 | COLUMN FOUNDATION SUBMISSION |
| | 01/15/08 | ISSUED FOR CONSTRUCTION |
| 3 | 03/07/08 | ADD PILES/PILE CAPS AT EXP JTS |
| 4 | 03/18/08 | ADD GRADE BEAM & 14PC14 |
| 5 | 09/08/08 | RE-ISSUED FOR CONSTRUCTION |

GRAPHIC SCALE

CONTRACTORS

| | |
|---|---|
| A/E CON. NO. | GS-04P-07-EX-C-0099 |
| A/E TASK NO. | |
| CONS. CONTR. | |
| CONS. WORK | |
| PRIME A/E | |
| SUB A/E | |
| CONSTR. CON. | |

BUILDING

| | |
|---|---|
| NAME | ARMED FORCES RETIREMENT HOME |
| STREET | 1800 BEACH DRIVE |
| CITY/ST./ZIP | GULFPORT, MS 39507 |
| BUILDING NO. | |
| OTHER | |
| BUILDING NOs. | |
| FACILITY CODE | |

PROJECT

| | |
|---|---|
| PROJECT TITLE | ARMED FORCES RETIREMENT HOME<br>GULFPORT, MISSISSIPPI |
| PROJECT DESCRIPTION | NEW CONSTRUCTION |
| PROJECT NO. | 31942982 |
| GSA PM | STEVEN SMITH |
| SUBMISSION | ISSUED FOR CONSTRUCTION |
| SUB. DATE | 09/08/2008 |

DRAWING

| | |
|---|---|
| DRAWING TITLE | PARTIAL FOUNDATION PLAN – MECH ROOMS |
| FILE NAME | S-106-N0095730.DWG |
| FLOOR NO. | 00 |
| DRAWN BY | JVS DATE DRAFTED: |
| CHECKED BY | MWZ SHEET SIZE: 34 X 44 |
| DRAWING NO. | S 1 06<br>DISCIPLINE SHEET TYPE SEQUENCE<br>SHEET 000 OF 000 |

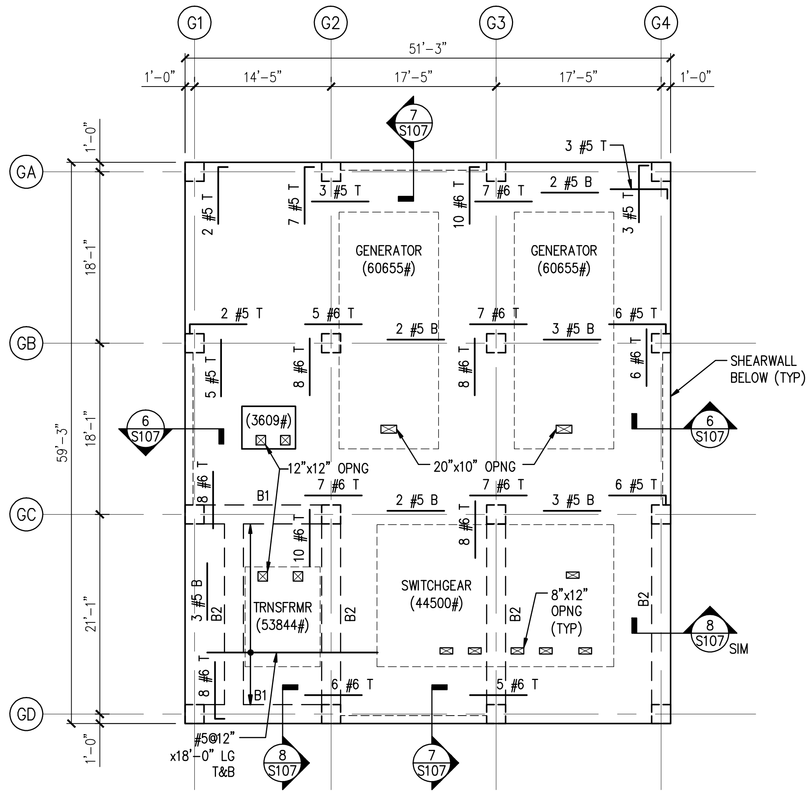


## 2 GENERATOR PLATFORM FRAMING PLAN

S107 1/8" = 1'-0"

PLAN NOTES:

1. T/SLAB EL. 35'-0", UNO.
2. TYPICAL FLOOR CONSTRUCTION CONSISTS OF 11" THICK TWO-WAY REINFORCED CONCRETE FLAT SLAB, UNO.
3. PROVIDE EPOXY COATED BARS FOR ALL SLABS AND BEAMS.
4. TWO-WAY SLAB REINFORCEMENT:
   - PROVIDE BOTTOM MAT OF CONTINUOUS REINFORCMENT CONSISTING OF #5 @ 12" B EACH WAY. ADDITIONAL BOTTOM BARS (IF ANY) ARE INDICATED ON THE PLAN.
   - PROVIDE TOP MAT OF CONTINUOUS REINFORCEMENT CONSISTING #5 @ 12" T EACH WAY. ADDITIONAL TOP BARS (IF ANY) ARE INDICATED ON THE PLAN.
   - ALL REINFORCEMENT ON PLAN IS IN ADDITION TO THE TOP AND BOTTOM MATS OF REINFORCEMENT.
5. SLAB REINF IN NORTH-SOUTH DIRECTION SHALL BE OUTERMOST LAYERS OF TOP AND BOTTOM BARS. SLAB REINF IN EAST-WEST DIRECTION SHALL BE INNERMOST LAYERS OF TOP AND BOTTOM BARS.
6. CENTER ALL BEAMS ON GRIDLINES, UNO.
7. COORDINATE SIZE AND LOCATION OF ALL EQUIPMENT, OPENINGS, SLEEVES, DRAINS, CURBS, PADS, EMBEDS, INSERTS, ETC WITH ARCH & MEP DRAWINGS.
8. SEE S501 FOR COLUMN TYPICAL DETAILS.
9. SEE S521 FOR SLAB TYPICAL DETAILS.
10. SEE S531 FOR BEAM TYPICAL DETAILS.
11. SEE ARCH DRAWINGS FOR METAL STAIR AND GUARDRAIL DETAILS.

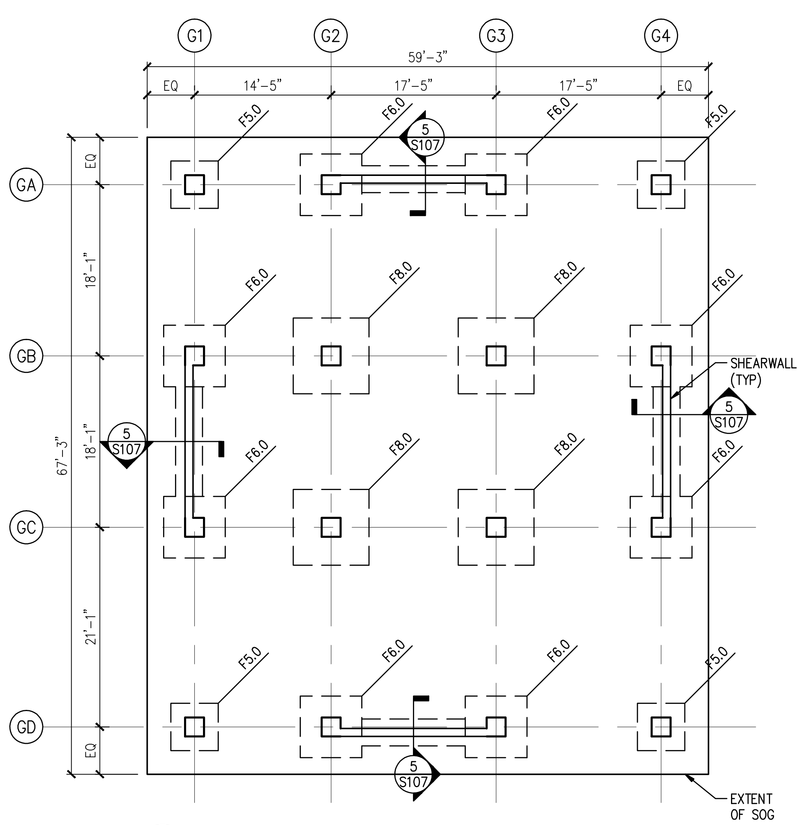


## 1 GENERATOR PLATFORM FOUNDATION PLAN

S107 1/8" = 1'-0"

PLAN NOTES:

1. T/FOOTING EL. 13.40'. T/WALL FOOTING TO MATCH TOP OF ADJACENT FOOTING ELEVATION, UNO.
2. CENTER ALL FOOTINGS AND COLUMNS ON GRIDLINES, UNO.
3. COORDINATE ALL EXISTING AND NEW UNDERGROUND UTILITIES WITH CIVIL AND MEP DRAWINGS.
4. T/SLAB EL, 19.00', UNO.
5. SLAB CONSTRUCTION CONSISTS OF 5" THICK CONCRETE SLAB-ON-GRADE WITH 6x6-W2.0xW2.0 WELDED WIRE FABRIC ON GRANULAR BASE.
6. SEE S501 FOR COLUMN TYPICAL DETAILS.
7. SEE S511 FOR SLAB-ON-GRADE TYPICAL DETAILS.
8. SEE ARCH DRAWINGS FOR METAL STAIR DETAILS.
9. SEE ELECT DWGS FOR CONDUIT RISER CONCRETE ENCLOSURE LOCATIONS AND DETAILS.

**FOOTING SCHEDULE ($q_{net}$ = 2500 PSF)**

| MARK | SIZE | DEPTH | REINF EA WAY | REMARKS |
|---|---|---|---|---|
| | | | | |
| F5.0 | 5'-0"x5'-0" | 16" | 6 #5 T&B | |
| F6.0 | 6'-0"x6'-0" | 16" | 7 #5 T&B | |
| F8.0 | 8'-0"x8'-0" | 18" | 7 #6 T&B | |
| | | | | |
| | | | | |

**COLUMN SCHEDULE (f'c = 5000 PSI)**

| LEVEL \ COLUMN MARK | | TYP INT COL | TYP EXT COL | – | – |
|---|---|---|---|---|---|
| LEVEL ONE | SIZE | | | | |
| | REINF | | | | |
| | TIES | | | | |
| | TYPE | | | | |
| GARAGE LEVEL | SIZE | 24"x24" | 24"x24" | – | – |
| | REINF | 8 #8 | 8 #8 | – | – |
| | TIES | #3 @ 10" | #3 @ 10" | – | – |
| | TYPE | T2 | T2 | – | – |
| DOWELS | | 8 #8 | 8 #8 | – | – |
| REMARKS | | – | – | – | – |
| FOUNDATION SERVICE LOAD (k) | | 156 | 83 | – | – |

NOTE:

1. SEE S501 FOR COLUMN TYPICAL DETAILS.

**BEAM SCHEDULE (f'c = 5000 PSI)**

| MARK | SIZE | | REINFORCEMENT | | | | STIRRUPS | | | | REMARKS |
|---|---|---|---|---|---|---|---|---|---|---|---|
| | W | D | BOTTOM BARS | TOP BARS | | | SIZE | TYPE | SPACING | END | |
| | | | | LE | FL | RE | | | | | |
| | | | | | | | | | | | |
| B1 | 24 | 24 | 5 #9 | – | 4 #7 | – | #4 | S1 | 2@4", B@10" | EE | DEVELOP TOP BARS INTO ADJACENT SLAB |
| B2 | 24 | 24 | 6 #11 | – | 4 #7 | – | #4 | S1 | 2@4", B@10" | EE | DEVELOP TOP BARS INTO ADJACENT SLAB |
| | | | | | | | | | | | |
| | | | | | | | | | | | |
| | | | | | | | | | | | |

NOTES:

1. SEE S531 FOR BEAM TYPICAL DETAILS.
2. PROVIDE EPOXY COATED BARS FOR ALL BEAMS.

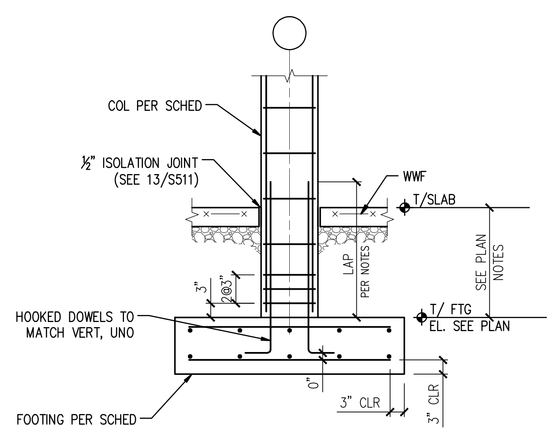


## 3 TYP CONCRETE COLUMN FOOTING DETAIL

S107 S107 N.T.S

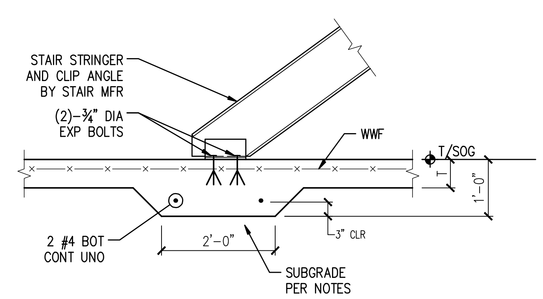


## 4 TYP THICKENED SLAB DETAIL AT METAL STAIR

S107 S107 N.T.S.

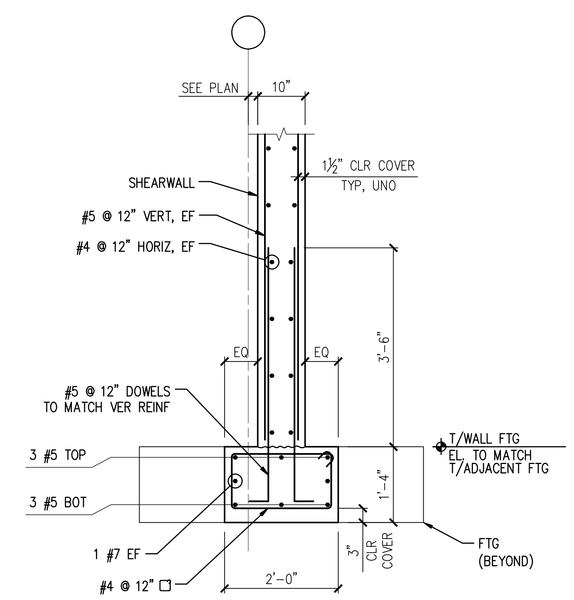


## 5 SECTION

S107 S107 3/4" = 1'-0"

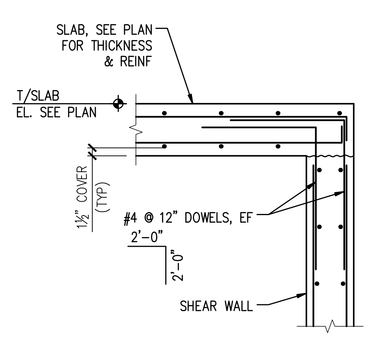


## 6 SECTION

S107 S107 3/4" = 1'-0"

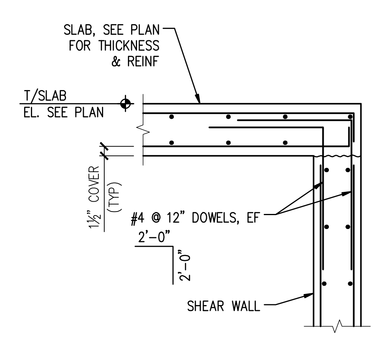


## 7 SECTION

S107 S107 3/4" = 1'-0"

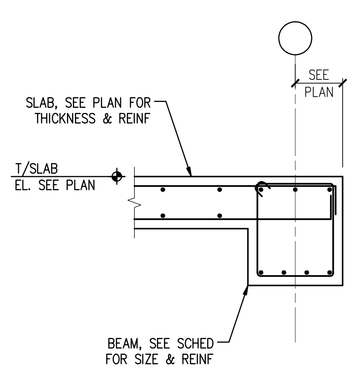


## 8 SECTION

S107 S107 3/4" = 1'-0"


GENERAL SERVICES ADMINISTRATION
77 FORSYTH STREET
SUITE 600
ATLANTA, GA 30303
TEL: (404)331-3200

PROJECT MANAGEMENT CONSULTANT TO THE GENERAL SERVICES ADMINISTRATION

YATES CONSTRUCTION

SFCS Architecture Engineering Planning Interiors

URS CORPORATION
2020 K ST, NW
SUITE 300
WASHINGTON D.C. 20006


ISSUED FOR CONSTRUCTION

CERTIFICATIONS: DISTRICT OF COLUMBIA MARK W. ZIMPELMAN 8572 REGISTERED PROFESSIONAL ENGINEER 06/26/09

KEY PLAN

REVISION NOTES

| MARK | DATE | DESCRIPTION |
|---|---|---|
| 80 | 06/26/09 | ARCH & MEP REVISIONS |

GRAPHIC SCALE

| CONTRACTORS | |
|---|---|
| A/E CON. NO. | GS-04P-07-EX-C-0099 |
| A/E TASK NO. | |
| CONS. CONTR. | |
| CONS. WORK | |
| PRIME A/E | |
| SUB A/E | |
| CONSTR. CON. | |

| BUILDING | |
|---|---|
| NAME | ARMED FORCES RETIREMENT HOME |
| STREET | 1800 BEACH DRIVE |
| CITY/ST./ZIP | GULFPORT, MS 39507 |
| BUILDING NO. | |
| OTHER BUILDING NOs. | |
| FACILITY CODE | |

| PROJECT | |
|---|---|
| PROJECT TITLE | ARMED FORCES RETIREMENT HOME GULFPORT, MISSISSIPPI |
| PROJECT DESCRIPTION | NEW CONSTRUCTION |
| PROJECT NO. | 31942982 |
| GSA PM | STEVEN SMITH |
| SUBMISSION | ISSUED FOR CONSTRUCTION |
| SUB. DATE | 09/08/2008 |

| DRAWINGS | |
|---|---|
| DRAWING TITLE | GENERATOR PLATFORM PLANS & DETAILS |
| FILE NAME | S-107-N0095730.DWG |
| FLOOR NO. | 00 |
| DRAWN BY | JVS DATE DRAFTED: |
| CHECKED BY | MWZ SHEET SIZE: 34x44 |
| DRAWING NO. | 80 S 1 07 (DISCIPLINE SHEET TYPE SEQUENCE) |
| | SHEET 000 OF 000 |

PROPERTY OF THE UNITED STATES GOVERNMENT – FOR OFFICIAL USE ONLY. Do not remove this notice. Properly destroy documents when no longer needed.

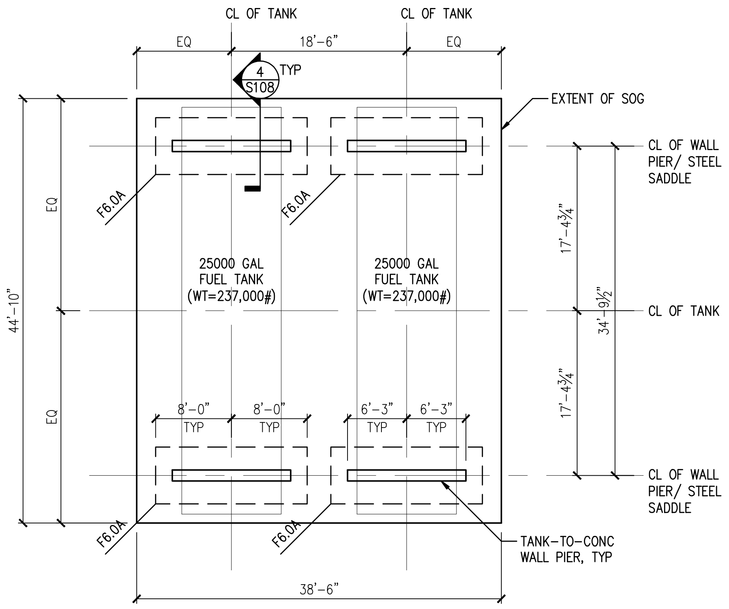


## 1 FUEL STORAGE TANK FOUNDATION PLAN

S108 1/8" = 1'-0"

PLAN NOTES:

1. T/FOOTING EL. 14.00'.
2. CENTER ALL FOOTINGS ON CENTERLINE OF WALL PIERS, UNO.
3. COORDINATE ALL EXISTING AND NEW UNDERGROUND UTILITIES WITH CIVIL AND MEP DRAWINGS.
4. T/SLAB EL, 19.00', UNO.
5. SLAB CONSTRUCTION CONSISTS OF 5" THICK CONCRETE SLAB-ON-GRADE WITH 6x6-W2.0xW2.0 WELDED WIRE FABRIC ON GRANULAR BASE.
6. SEE S511 FOR SLAB-ON-GRADE TYPICAL DETAILS.
7. SEE ARCH DRAWINGS FOR METAL STAIR DETAILS.
8. SEE CIVIL DRAWINGS FOR LOCATION ON SITE.

DESIGN BASIS:

1. TANK OPERATIONAL PROCEDURAL INSTRUCTIONS SHALL CLEARLY STATE THAT THE FUEL TANKS SHALL BE AT FULL CAPACITY BEFORE HURRICANE EVENT. FLUID LEVEL INSIDE BOTH TANKS SHALL BE MAINTAINED AT HIGHER ELEVATION THAN FLOOD/SURGE ELEVATION OUTSIDE TANK. AS A RESULT, TANK FOUNDATION WILL NOT BE SUBJECTED TO UPLIFT FORCE (BUOYANCY) ON TANK.

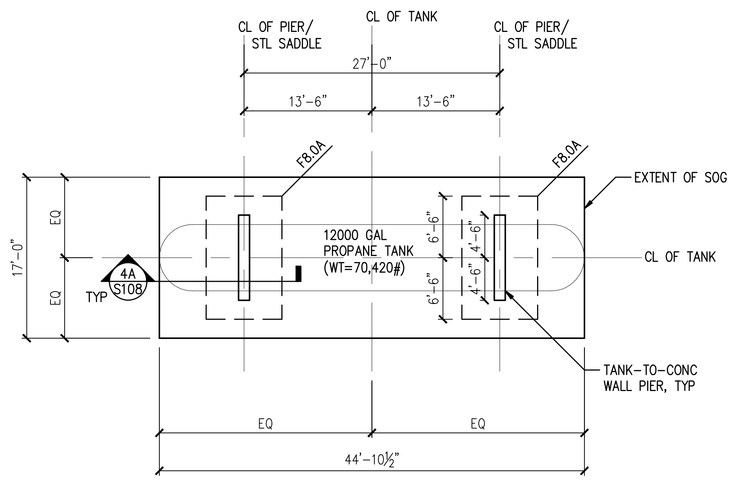


## 2 PROPANE TANK TANK FOUNDATION PLAN

S108 1/8" = 1'-0"

PLAN NOTES:

1. T/FOOTING EL. 13.40'.
2. CENTER ALL FOOTINGS ON CENTERLINE OF WALL PIERS, UNO.
3. COORDINATE ALL EXISTING AND NEW UNDERGROUND UTILITIES WITH CIVIL AND MEP DRAWINGS.
4. T/SLAB EL, 18.40', UNO.
5. SLAB CONSTRUCTION CONSISTS OF 5" THICK CONCRETE SLAB-ON-GRADE WITH 6x6-W2.0xW2.0 WELDED WIRE FABRIC ON GRANULAR BASE.
6. SEE S511 FOR SLAB-ON-GRADE TYPICAL DETAILS.
7. SEE ARCH DRAWINGS FOR METAL STAIR DETAILS.
8. SEE CIVIL DRAWINGS FOR LOCATION ON SITE.

DESIGN BASIS:

1. TANK OPERATIONAL PROCEDURAL INSTRUCTIONS SHALL CLEARLY STATE THAT THE PROPANE TANK SHALL BE AT FULL CAPACITY BEFORE HURRICANE EVENT. AS A RESULT, FOUNDATION IS DESIGNED TO ONLY RESIST UPLIFT FORCE (BUOYANCY) ON TANK WHICH IS IN EXCESS OF SPECIFIED TOTAL WEIGHT OF TANK AND FLUID.

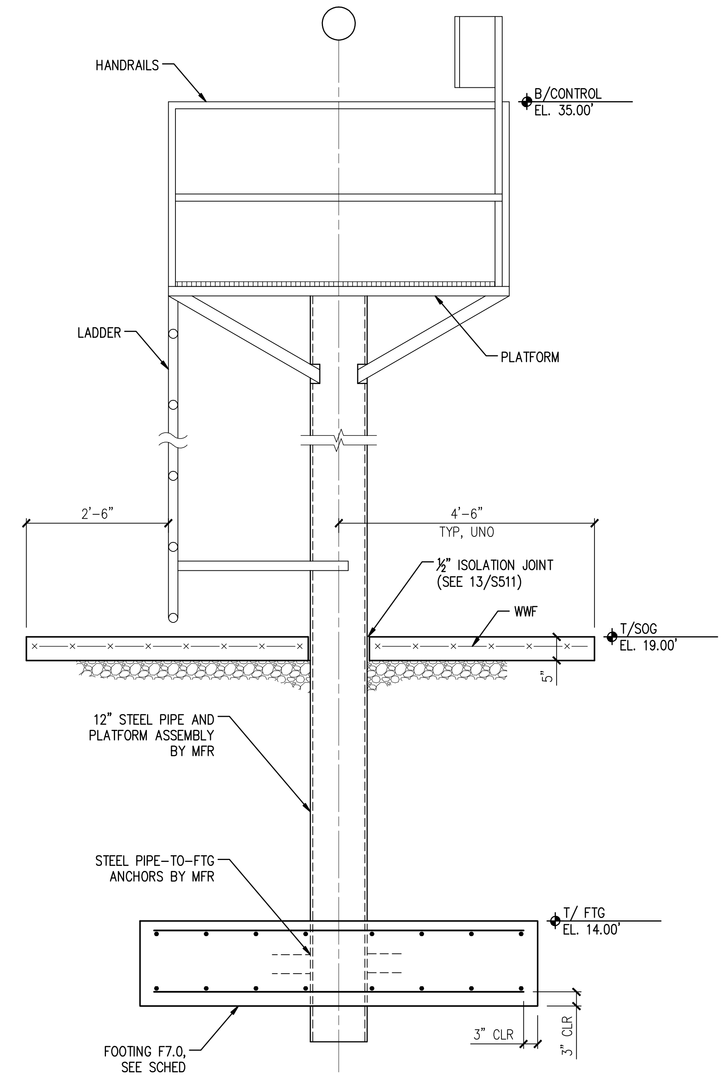


## 3 ELEVATED PUMP FOOTING DETAIL

S108 3/4" = 1'-0"

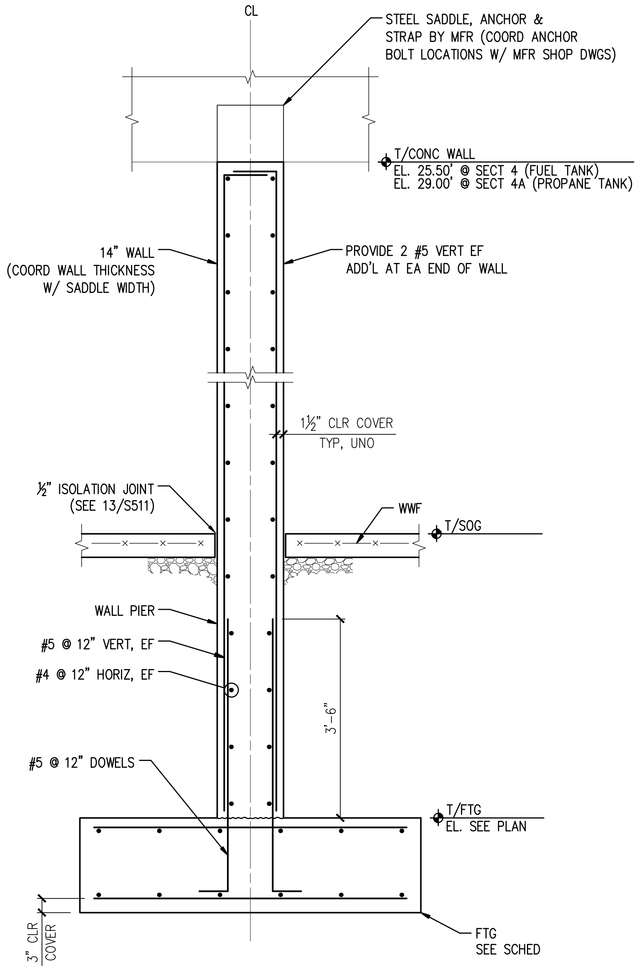


## 4 4A SECTION

S108 S108 S108 S108 3/4" = 1'-0"

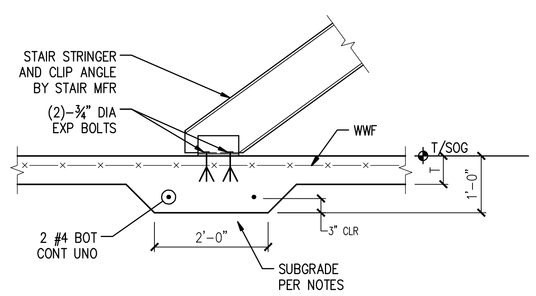


## 5 TYP THICKENED SLAB DETAIL AT METAL STAIR

S108 N.T.S.

**FOOTING SCHEDULE ($q_{net}$ = 2500 PSF)**

| MARK | SIZE | DEPTH | REINF EA WAY | REMARKS |
|---|---|---|---|---|
| | | | | |
| F6.0A | 6'-0"x16'-0" | 20" | 16 #6 T&B (SHORT)<br>6 #6 T&B (LONG) | |
| F7.0 | 7'-0"x7'-0" | 18" | 8 #6 T&B | 12" DIA STL THRU FTG BY WELL PUMP MFR |
| F8.0A | 8'-0"x13'-0" | 24" | 12 #7 T&B (SHORT)<br>7 #7 T&B (LONG | |
| | | | | |
| | | | | |

PROPERTY OF THE UNITED STATES GOVERNMENT – FOR OFFICIAL USE ONLY. Do not remove this notice. Properly destroy documents when no longer needed.

GSA GENERAL SERVICES ADMINISTRATION
77 FORSYTH STREET
SUITE 600
ATLANTA, GA 30303
TEL: (404)331-3200

AFRH The Premier Retirement Community for America's Veterans
JE JACOBS
PROJECT MANAGEMENT CONSULTANT TO THE GENERAL SERVICES ADMINISTRATION

YATES CONSTRUCTION

SFCS Architecture Engineering Planning Interiors

URS CORPORATION
2020 K ST, NW
SUITE 300
WASHINGTON D.C. 20006

ISSUED FOR CONSTRUCTION

CERTIFICATIONS

DISTRICT OF COLUMBIA
MARK W. ZIMPELMAN
8572
REGISTERED PROFESSIONAL ENGINEER
06/26/09

KEY PLAN

REVISION NOTES

| MARK | DATE | DESCRIPTION |
|---|---|---|
| 00 | 06/26/09 | ARCH & MEP REVISIONS |

GRAPHIC SCALE

CONTRACT NO.

| | |
|---|---|
| A/E CON. NO. | GS-04P-07-EX-C-0099 |
| A/E TASK NO. | |
| CONS. CONTR. | |
| CONS. WORK | |
| PRIME A/E | |
| SUB A/E | |
| CONSTR. CON. | |

BUILDING

| | |
|---|---|
| NAME | ARMED FORCES RETIREMENT HOME |
| STREET | 1800 BEACH DRIVE |
| CITY/ST./ZIP | GULFPORT, MS 39507 |
| BUILDING NO. | |
| OTHER BUILDING NOs. | |
| FACILITY CODE | |

PROJECT

| | |
|---|---|
| PROJECT TITLE | ARMED FORCES RETIREMENT HOME GULFPORT, MISSISSIPPI |
| PROJECT DESCRIPTION | NEW CONSTRUCTION |
| PROJECT NO. | 31942982 |
| GSA PM | STEVEN SMITH |
| SUBMISSION | ISSUED FOR CONSTRUCTION |
| SUB. DATE | 09/08/2008 |

DRAWING

| | |
|---|---|
| DRAWING TITLE | FUEL TANK, PROPANE TANK FOUNDATION |
| FILE NAME | S-108-N0095730.DWG |
| FLOOR NO. | 00 |
| DRAWN BY | JVS DATE DRAFTED: |
| CHECKED BY | MWZ SHEET SIZE: 34 X 44 |
| DRAWING NO. | 00 S 1 08 |
| | DISCIPLINE SHEET TYPE SEQUENCE |
| | SHEET 000 OF 000 |

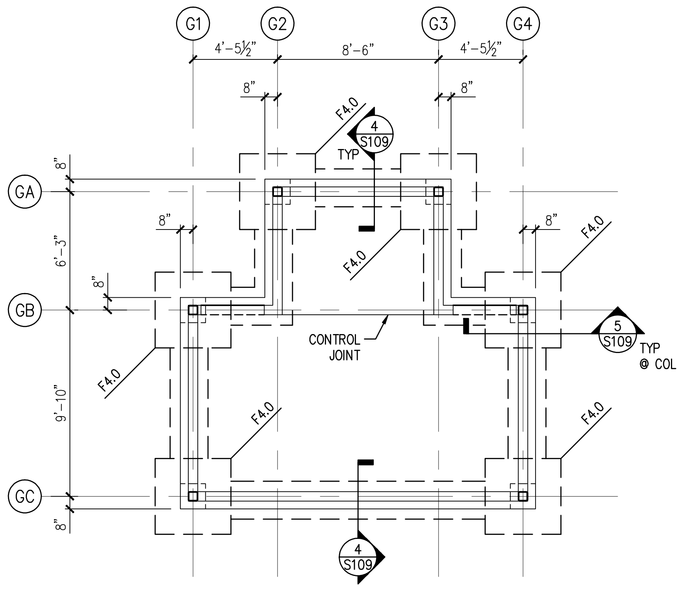


## 1 S109 GUARD HOUSE FOUNDATION PLAN

1/4" = 1'-0"

PLAN NOTES:

1. T/SLAB EL. 17.08', UNO.
2. SLAB CONSTRUCTION CONSISTS OF 5" THICK CONCRETE SLAB-ON-GRADE WITH 6x6-W2.0xW2.0 WELDED WIRE FABRIC OVER VAPOR RETARDER ON GRANULAR BASE.
3. SEE S511 FOR SLAB-ON-GRADE TYPICAL DETAILS.
4. T/FOOTING EL. 14.38'. T/WALL FOOTING TO MATCH TOP OF ADJACENT FOOTING ELEVATION, UNO.
5. CENTER ALL FOOTINGS, PIERS AND COLUMNS ON GRIDLINES, UNO.
6. COORDINATE SIZE AND LOCATION OF ALL OPENINGS, SLEEVES, DRAINS, DOOR OPENINGS, LEDGES, EMBED, ETC WITH ARCH, CIVIL AND MEP DRAWINGS.
7. COORDINATE ALL EXISTING AND NEW UNDERGROUND UTILITIES WITH CIVIL AND MEP DRAWINGS.

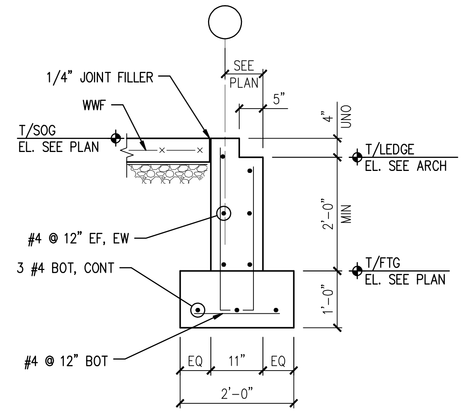


## 4 S109 SECTION

3/4" = 1'-0"

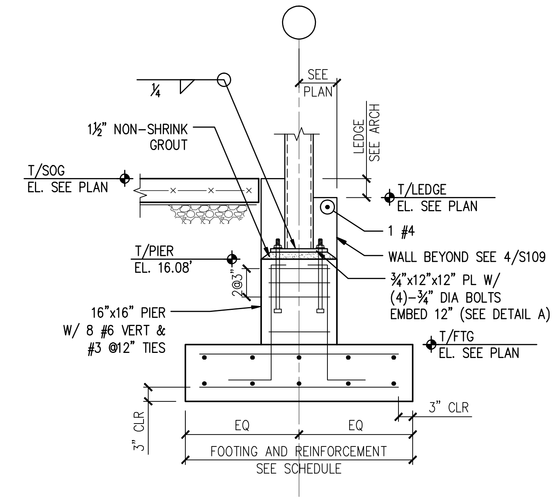


## 5 S109 SECTION

3/4" = 1'-0"

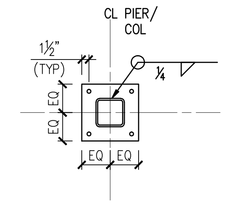


## A DETAIL

| FOOTING SCHEDULE ($q_{net}$ = 2500 PSF) | | | | |
|---|---|---|---|---|
| MARK | SIZE | DEPTH | REINF EA WAY | REMARKS |
| | | | | |
| F4.0 | 4'-0"x4'-0" | 12" | 5 #5 T&B | |
| | | | | |

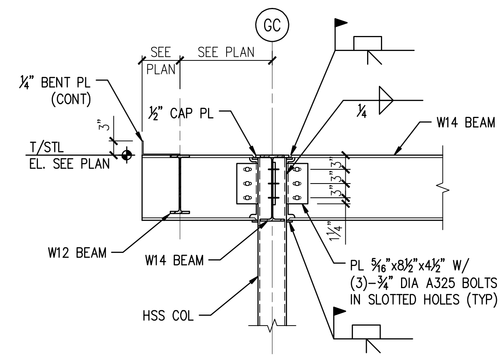


## 6 S109 MOMENT CONNECTION DETAIL AT CANTILEVER

3/4" = 1'-0"

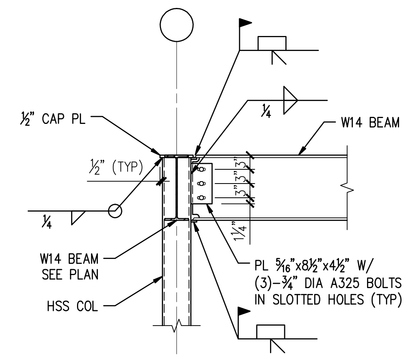


## 7 S109 SECTION

3/4" = 1'-0"

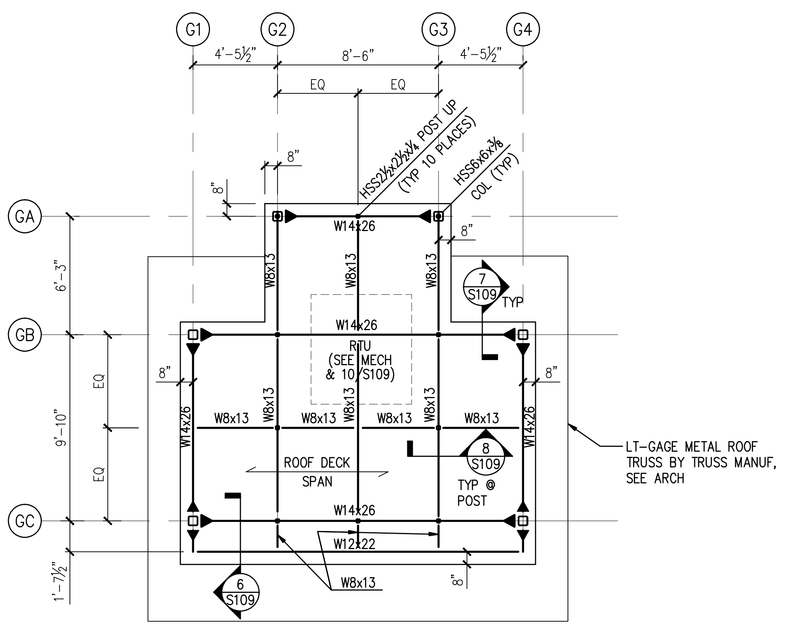


## 2 S109 GUARD HOUSE ROOF FRAMING PLAN

1/4" = 1'-0"

PLAN NOTES:

1. T/ROOF DECK EL. 27'-1½", UNO.
2. T/ROOF STEEL EL. 27'-0", UNO.
3. ROOF CONSTRUCTION CONSISTS OF 1 1/2" DEEP x 20 GAGE GALVANIZED (G90) STEEL ROOF DECK.
4. SPACE STEEL BEAMS EVENLY BETWEEN COLUMNS, UNO.
5. ▶—— INDICATES MOMENT CONNECTION, SEE DETAIL; PROVIDE COLUMN STIFFENERS AS REQUIRED BY AISC.
6. COORDINATE SIZE AND LOCATION OF ALL OPENINGS, SLEEVES, DRAINS, ETC WITH ARCH & MEP DRAWINGS.
7. ALL EXPOSED STEEL SHALL BE HOT-DIPPED GALVANIZED.

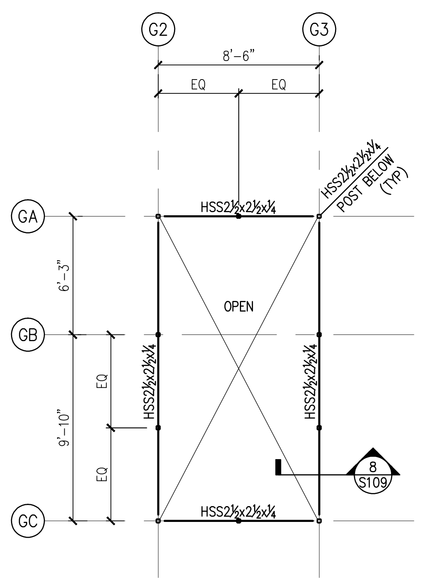


## 3 S109 ROOF SCREEN FRAMING PLAN

1/4" = 1'-0"

PLAN NOTES:

1. T/STEEL EL. 30'-6".
2. ALL STEEL SHALL BE HOT-DIPPED GALVANIZED.

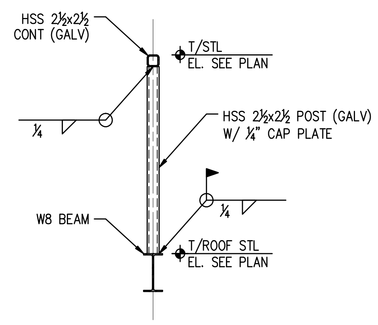


## 8 S109 TYP SCREEN POST

3/4" = 1'-0"

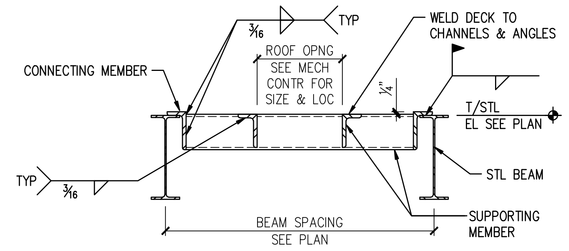


| BEAM SPACING | EQUIPMENT WEIGHT | SUPPORTING MEMBER | CONNECTING MEMBER |
|---|---|---|---|
| MAX 6'-0" | MAX 1000# | L5x3x¼ LLV | L5x3x¼ LLV x 6" |

1. TYPICAL ROOF OPENING GREATER THAN 18", INCLUDING ALL ROOF DRAINS; ▨ INDICATES ROOF OPENING AS SHOWN ON PLAN.
2. COORDINATE LOCATION, SIZE & WEIGHT WITH MECHANICAL CONTRACTOR.

## 9 S109 TYP ROOF OPENING SUPPORT

3/4" = 1'-0"

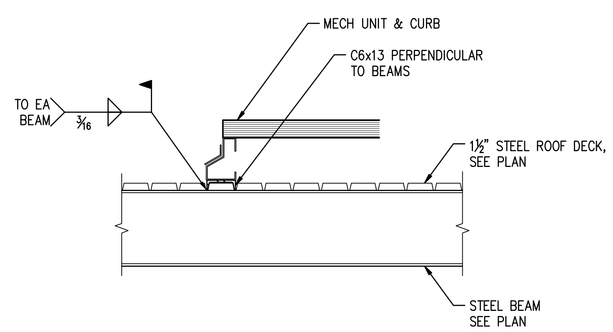


NOTE: FINAL LOCATIONS OF CHANNELS TO BE COORDINATED WITH MECH EQUIP SUPPLIER.

## 10 S109 TYP ROOF MOUNTED MECH EQUIPMENT SUPPORT

N.T.S.

PROPERTY OF THE UNITED STATES GOVERNMENT – FOR OFFICIAL USE ONLY. Do not remove this notice. Properly destroy documents when no longer needed.

GENERAL SERVICES ADMINISTRATION
77 FORSYTH STREET
SUITE 600
ATLANTA, GA 30303
TEL: (404)331-3200

AFRH The Premier Retirement Community for America's Veterans

JE JACOBS PROJECT MANAGEMENT CONSULTANT TO THE GENERAL SERVICES ADMINISTRATION

YATES CONSTRUCTION

SFCS Architecture Engineering Planning Interiors

URS CORPORATION
2020 K ST, NW
SUITE 300
WASHINGTON D.C. 20006

ISSUED FOR CONSTRUCTION

CERTIFICATIONS: DISTRICT OF COLUMBIA MARK W. ZIMPELMANN 8572 REGISTERED PROFESSIONAL ENGINEER 08/20/09

KEY PLAN

REVISION NOTES

| MARK | DATE | DESCRIPTION |
|---|---|---|
| 03 | 08/20/09 | GUARDHOUSE REVISIONS |

GRAPHIC SCALE

| | | |
|---|---|---|
| CONTRACTORS | A/E CON. NO. | GS-04P-07-EX-C-0099 |
| | A/E TASK NO. | |
| | CONS. CONTR. | |
| | CONS. WORK | |
| | PRIME A/E | |
| | SUB A/E | |
| | CONSTR. CON. | |
| BUILDING | NAME | ARMED FORCES RETIREMENT HOME |
| | STREET | 1800 BEACH DRIVE |
| | CITY/ST./ZIP | GULFPORT, MS 39507 |
| | BUILDING NO. | |
| | OTHER BUILDING NOs. | |
| | FACILITY CODE | |
| PROJECT | PROJECT TITLE | ARMED FORCES RETIREMENT HOME GULFPORT, MISSISSIPPI |
| | PROJECT DESCRIPTION | NEW CONSTRUCTION |
| | PROJECT NO. | 31942982 |
| | GSA PM | STEVEN SMITH |
| | SUBMISSION | ISSUED FOR CONSTRUCTION |
| | SUB. DATE | 09/08/2008 |
| DRAWING | DRAWING TITLE | GUARDHOUSE PLANS & DETAILS |
| | FILE NAME | S-109-N0095730.DWG |
| | FLOOR NO. | 00 |
| | DRAWN BY | JVS DATE DRAFTED: |
| | CHECKED BY | MWZ SHEET SIZE 34 X 44 |
| | 03 DRAWING NO. | S 1 09 (DISCIPLINE SHEET TYPE SEQUENCE) |
| | | SHEET 000 OF 000 |

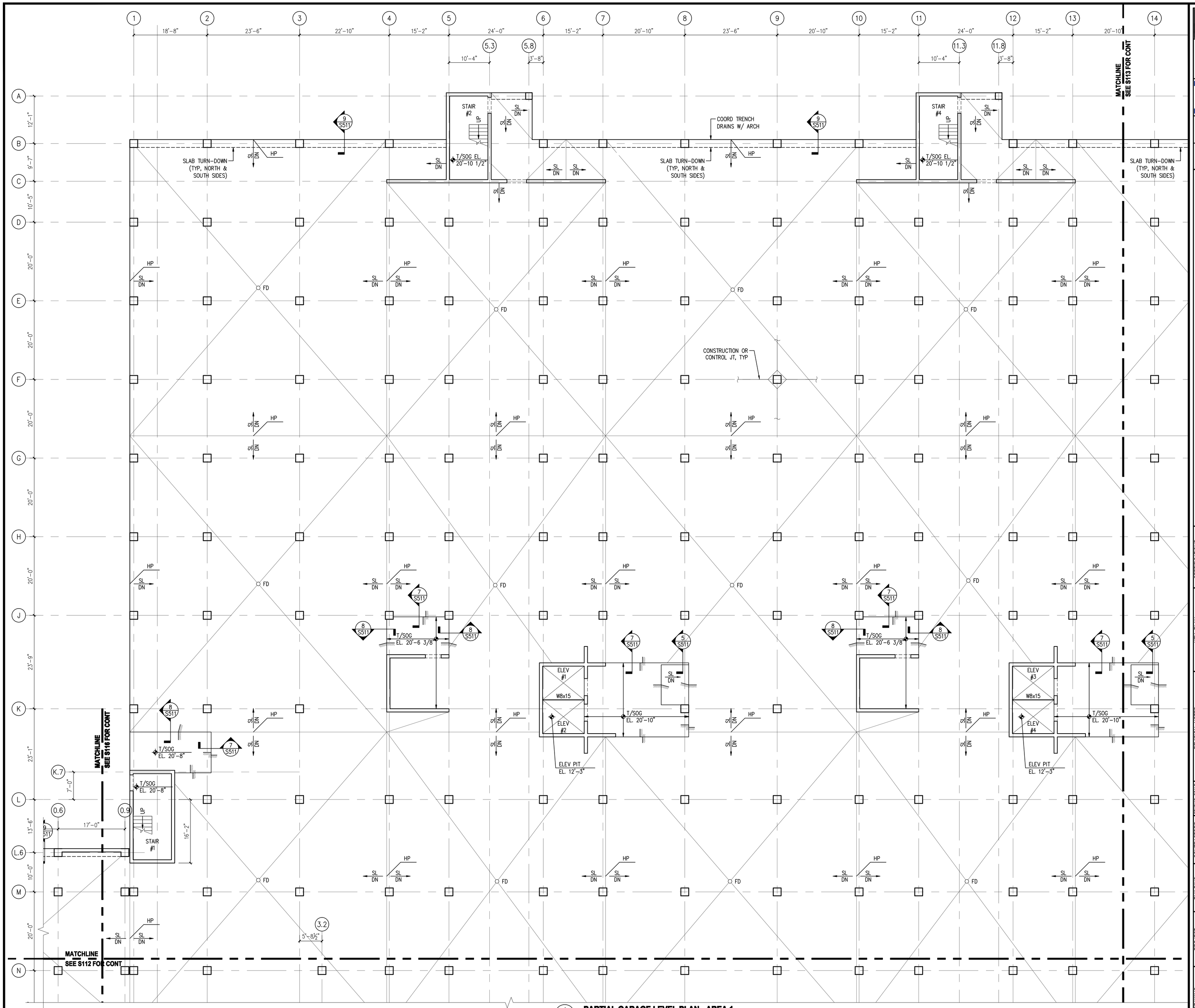


## PARTIAL GARAGE LEVEL PLAN - AREA 1

1/8" = 1'-0"

SEE S113 FOR PLAN NOTES.

PROPERTY OF THE UNITED STATES GOVERNMENT – FOR OFFICIAL USE ONLY. Do not remove this notice. Properly destroy documents when no longer needed.


GSA
GENERAL SERVICES ADMINISTRATION
77 FORSYTH STREET
SUITE 600
ATLANTA, GA 30303
TEL: (404)331-3200

AFRH
JACOBS
PROJECT MANAGEMENT CONSULTANT TO THE GENERAL SERVICES ADMINISTRATION

YATES CONSTRUCTION

SFCS Architecture Engineering Planning Interiors

URS
URS CORPORATION
2020 K ST, NW
SUITE 300
WASHINGTON D.C. 20006


ISSUED FOR CONSTRUCTION

CERTIFICATIONS

DISTRICT OF COLUMBIA
MARK W. ZIMPELMAN
8572
REGISTERED PROFESSIONAL ENGINEER
09/08/08

KEY PLAN

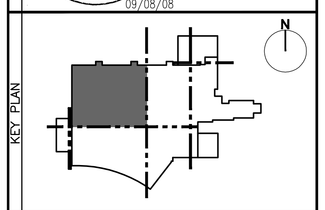

REVISION NOTES

| MARK | DATE | DESCRIPTION |
|---|---|---|
| 37 | 09/08/08 | ISSUED FOR CONSTRUCTION |

GRAPHIC SCALE

CONTRACTORS

| | |
|---|---|
| A/E CON. NO. | GS-04P-07-EX-C-0099 |
| A/E TASK NO. | |
| CONS. CONTR. | |
| CONS. WORK | |
| PRIME A/E | |
| SUB A/E | |
| CONSTR. CON. | |

BUILDING

| | |
|---|---|
| NAME | ARMED FORCES RETIREMENT HOME |
| STREET | 1800 BEACH DRIVE |
| CITY/ST./ZIP | GULFPORT, MS 39507 |
| BUILDING NO. | |
| OTHER BUILDING NOs. | |
| FACILITY CODE | |

PROJECT

| | |
|---|---|
| PROJECT TITLE | ARMED FORCES RETIREMENT HOME GULFPORT, MISSISSIPPI |
| PROJECT DESCRIPTION | NEW CONSTRUCTION |
| PROJECT NO. | 31942982 |
| GSA PM | STEVEN SMITH |
| SUBMISSION | ISSUED FOR CONSTRUCTION |
| SUB. DATE | 09/08/2008 |

DRAWING

| | |
|---|---|
| DRAWING TITLE | PARTIAL GARAGE LEVEL PLAN – AREA 1 |
| FILE NAME | S-111-N0095730.DWG |
| FLOOR NO. | GARAGE LEVEL |
| DRAWN BY | JVS DATE DRAFTED: |
| CHECKED BY | MWZ SHEET SIZE: 34 X 44 |
| DRAWING NO. | 37 S 1 11 DISCIPLINE SHEET TYPE SEQUENCE |

SHEET 000 OF 000

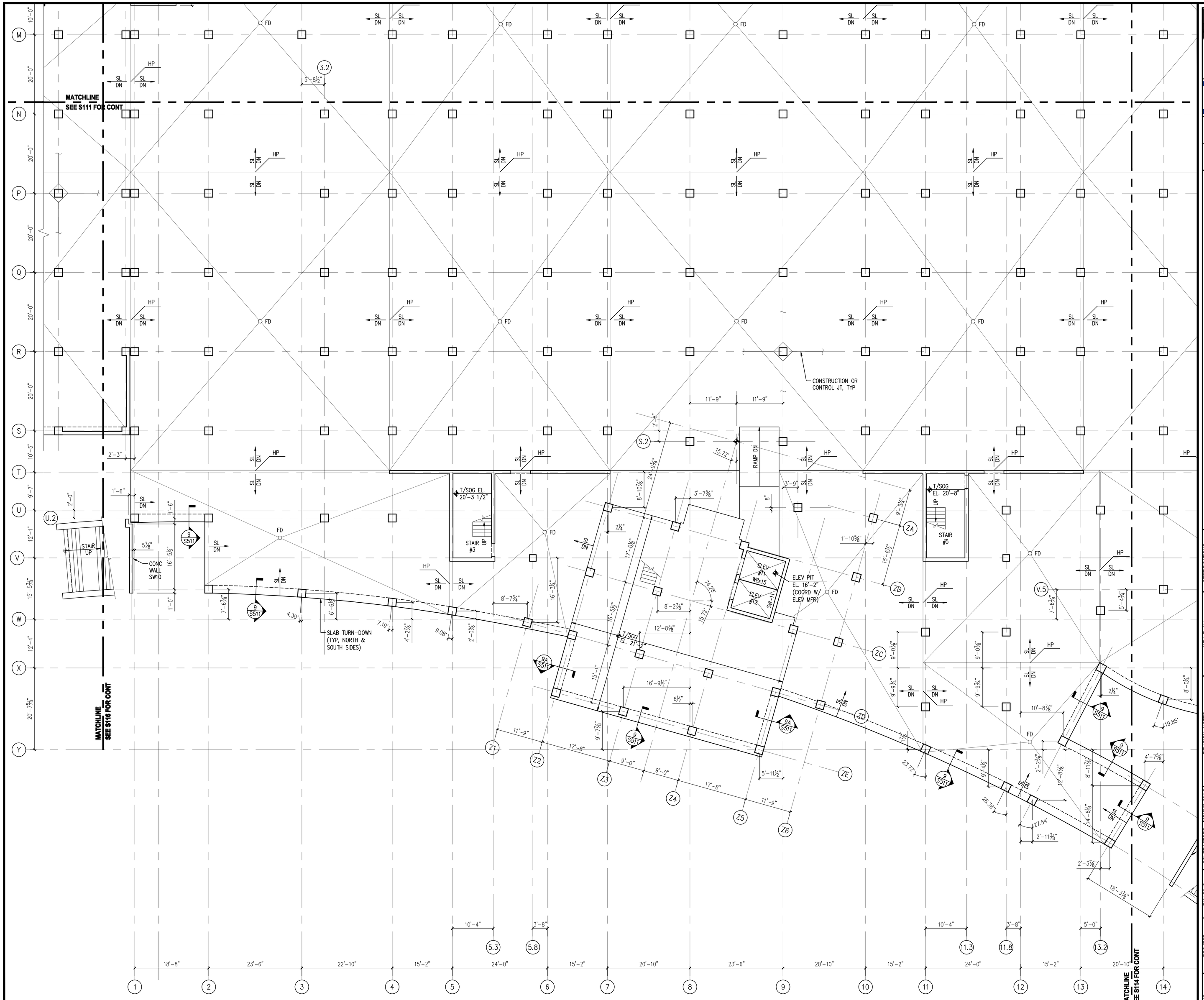


1 S112 **PARTIAL GARAGE LEVEL PLAN - AREA 2**

1/8" = 1'-0"

SEE S113 FOR PLAN NOTES.

PROPERTY OF THE UNITED STATES GOVERNMENT – FOR OFFICIAL USE ONLY. Do not remove this notice. Properly destroy documents when no longer needed.

GSA
GENERAL SERVICES ADMINISTRATION
77 FORSYTH STREET
SUITE 600
ATLANTA, GA 30303
TEL: (404)331-3200

AFRH The Premier Retirement Community for America's Veterans

JACOBS
PROJECT MANAGEMENT CONSULTANT TO THE GENERAL SERVICES ADMINISTRATION

YATES CONSTRUCTION

SFCS Architecture Engineering Planning Interiors

URS
URS CORPORATION
2020 K ST, NW
SUITE 300
WASHINGTON D.C. 20006

ISSUED FOR CONSTRUCTION

CERTIFICATIONS

DISTRICT OF COLUMBIA
MARK W. ZIMFERMAN
8572
REGISTERED PROFESSIONAL ENGINEER
09/08/08

KEY PLAN

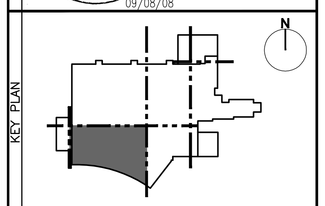


| MARK | DATE | DESCRIPTION |
|---|---|---|
| 3 | 09/08/08 | ISSUED FOR CONSTRUCTION |

REVISION NOTES

GRAPHIC SCALE

| | |
|---|---|
| A/E CON. NO. | GS-04P-07-EX-C-0099 |
| A/E TASK NO. | |
| CONS. CONTR. | |
| CONS. WORK | |
| PRIME A/E | |
| SUB A/E | |
| CONSTR. CON. | |
| NAME | ARMED FORCES RETIREMENT HOME |
| STREET | 1800 BEACH DRIVE |
| CITY/ST./ZIP | GULFPORT, MS 39507 |
| BUILDING NO. | |
| OTHER BUILDING NOs. | |
| FACILITY CODE | |
| PROJECT TITLE | ARMED FORCES RETIREMENT HOME GULFPORT, MISSISSIPPI |
| PROJECT DESCRIPTION | NEW CONSTRUCTION |
| PROJECT NO. | 31942982 |
| GSA PM | STEVEN SMITH |
| SUBMISSION | ISSUED FOR CONSTRUCTION |
| SUB. DATE | 09/08/2008 |
| DRAWING TITLE | PARTIAL GARAGE LEVEL PLAN – AREA 2 |
| FILE NAME | S-112-N0095730.DWG |
| FLOOR NO. | GARAGE LEVEL |
| DRAWN BY | JVS DATE DRAFTED: |
| CHECKED BY | MWZ SHEET SIZE: 34 X 44 |
| DRAWING NO. | 3 S 1 12 |
| | DISCIPLINE SHEET TYPE SEQUENCE |
| | SHEET 000 OF 000 |

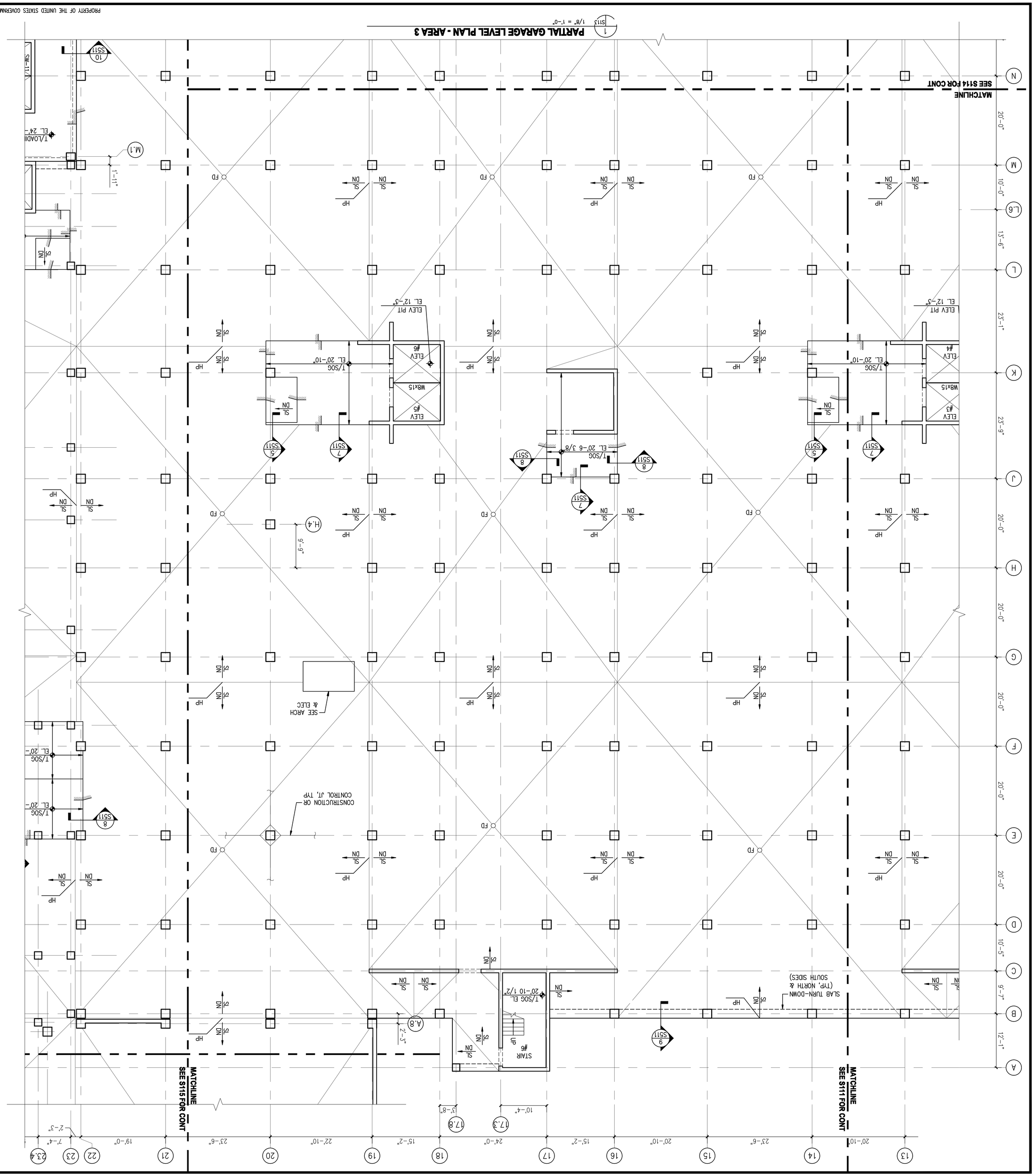


PLAN NOTES:

1. T/SLAB EL. VARIES, SEE ARCH FOR SLOPES AND HP & FD (FLOOR DRAINS).
2. FLOOR CONSTRUCTION CONSISTS OF 5" THICK CONCRETE SLAB-ON-GRADE WITH 6X6-W2.0XW2.0 WWF. PROVIDE SUPPORT CHAIRS TO HOLD WELDED WIRE FABRIC IN POSITION DURING CONCRETE PLACEMENT.
3. SEE SPECIFICATION AND ARCH DRAWINGS FOR SLAB FINISH REQUIREMENTS.
4. CENTER ALL WALLS AND COLUMNS ON GRIDLINES, UNO.
5. COORDINATE SIZE AND LOCATION OF ALL OPENINGS, SLEEVES, FLOOR DEPRESSIONS, DRAINS, TRENCHES, PITS, DOOR OPENINGS, CURBS, PADS, LEDGES, EMBEDS.
6. COORDINATE ALL EXISTING AND NEW UNDERGROUND UTILITIES WITH CIVIL AND MEP INSERTS, ETC WITH ARCH, CIVIL AND MEP DRAWINGS.
7. SEE S511 FOR TYPICAL SLAB-ON-GRADE DETAILS.
8. SEE S601 TO S608 FOR COLUMN SCHEDULE AND DETAILS.
9. INFORMATION CONTAINED ON THIS DRAWING IS BOUND BY THE MATCHLINE. FOR INFORMATION BEYOND THE MATCHLINE, SEE ADJACENT AREA.

| | |
|---|---|
| GRAPHIC SCALE | |
| A/E COM. NO. | 05-O4P-07-EX-C-0099 |
| A/E TASK NO. | |
| CONS. WORK | |
| CONS. CONTR. | |
| PRIME A/E | |
| SUB A/E | |
| CONTRACTORS | |
| NAME | ARMED FORCES RETIREMENT HOME |
| CONSTR. CON. | |
| STREET | 1600 BEACH DRIVE |
| CITY/ST/ZIP | GULFPORT, MS 39507 |
| BUILDING NO. | |
| BUILDINGS | |
| OTHER | |
| BUILDING NOS. | |
| FACILITY CODE | |
| PROJECT | ARMED FORCES RETIREMENT HOME |
| TITLE | GULFPORT, MISSISSIPPI |
| PROJECT | NEW CONSTRUCTION |
| PROJECT NO. | 3194298Z |
| DESCRIPTION | |
| GSA PM | STEVEN SMITH |
| SUBMISSION | ISSUED FOR CONSTRUCTION |
| SUB. DATE | 09/08/2008 |
| DRAWING TITLE | PARTIAL GARAGE LEVEL PLAN - AREA 3 |
| FILE NAME | S-113-N0095/30.DWG |
| DRAWN BY | JVS |
| DATE DRAFTED: | |
| FLOOR NO. | GARAGE LEVEL |
| CHECKED BY | MMZ |
| SHEET SIZE: 24 X 44 | |
| DRAWING NO. | S 1 1 3 |
| DISCIPLINE SHEET TYPE SEQUENCE | |
| SHEET 000 OF 000 | |

| MARK | DATE | DESCRIPTION |
|---|---|---|
| A | 09/08/08 | ISSUED FOR CONSTRUCTION |

KEY PLAN

CERTIFICATIONS

DISTRICT OF COLUMBIA
MARK M. ZIMPERMAN
8575
PROFESSIONAL ENGINEER
09/08/08

ISSUED FOR CONSTRUCTION

GSA
GENERAL SERVICES ADMINISTRATION
77 FORSYTH STREET
SUITE 600
ATLANTA, GA 30303
TEL: (404)331-3200

JE JACOBS
PROJECT MANAGEMENT CONSULTANT TO THE GENERAL SERVICES ADMINISTRATION
AFRH
The Provider for Veterans
The Employer for America's Veterans

VATES CONSTRUCTION

SFCS
Architecture
Engineering
Planning
Interiors

URS
URS CORPORATION
2020 K ST, NW
SUITE 300
WASHINGTON D.C. 20006

PROPERTY OF THE UNITED STATES GOVERNMENT – FOR OFFICIAL USE ONLY. Do not remove this notice. Properly destroy documents when no longer needed.

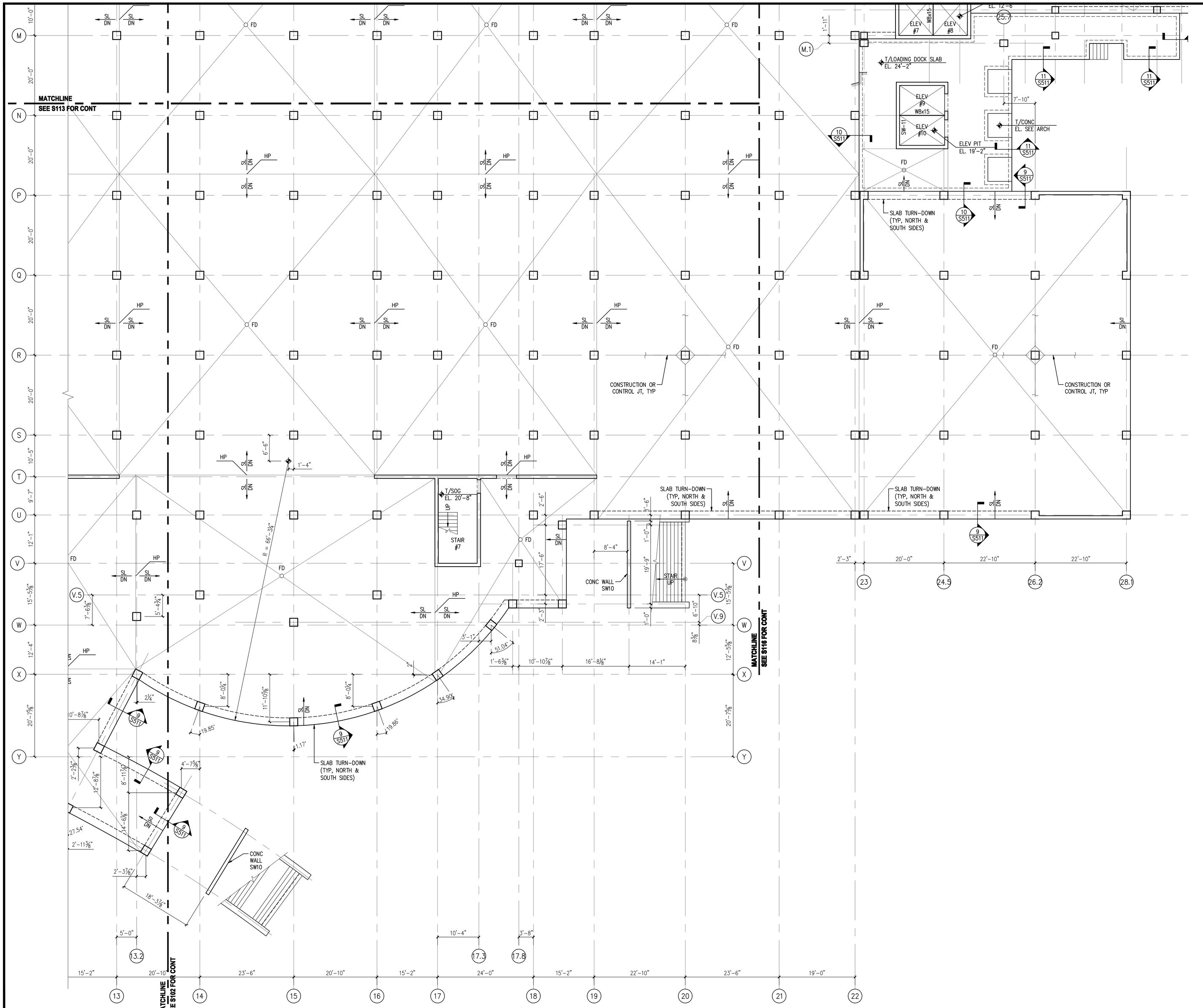


1 S114 **PARTIAL GARAGE LEVEL PLAN - AREA 4**

1/8" = 1'-0"

SEE S113 FOR PLAN NOTES.

PROPERTY OF THE UNITED STATES GOVERNMENT – FOR OFFICIAL USE ONLY. Do not remove this notice. Properly destroy documents when no longer needed.

GSA
GENERAL SERVICES ADMINISTRATION
77 FORSYTH STREET
SUITE 600
ATLANTA, GA 30303
TEL: (404)331-3200

AFRH The Premier Retirement Community for America's Veterans

JACOBS
PROJECT MANAGEMENT CONSULTANT TO THE GENERAL SERVICES ADMINISTRATION

YATES CONSTRUCTION

SFCS Architecture Engineering Planning Interiors

URS
URS CORPORATION
2020 K ST, NW
SUITE 300
WASHINGTON D.C. 20006

ISSUED FOR CONSTRUCTION

CERTIFICATIONS

DISTRICT OF COLUMBIA
MARK W. ZIMPELMAN
8572
REGISTERED PROFESSIONAL ENGINEER
09/08/08

KEY PLAN

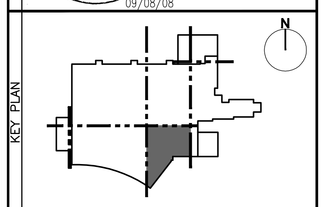


REVISION NOTES

| MARK | DATE | DESCRIPTION |
|---|---|---|
| 37 | 09/08/08 | ISSUED FOR CONSTRUCTION |

GRAPHIC SCALE

CONTRACTORS

| | |
|---|---|
| A/E CON. NO. | GS-04P-07-EX-C-0099 |
| A/E TASK NO. | |
| CONS. CONTR. | |
| CONS. WORK | |
| PRIME A/E | |
| SUB A/E | |
| CONSTR. CON. | |

BUILDING

| | |
|---|---|
| NAME | ARMED FORCES RETIREMENT HOME |
| STREET | 1800 BEACH DRIVE |
| CITY/ST./ZIP | GULFPORT, MS 39507 |
| BUILDING NO. | |
| OTHER BUILDING NOs. | |
| FACILITY CODE | |

PROJECT

| | |
|---|---|
| PROJECT TITLE | ARMED FORCES RETIREMENT HOME GULFPORT, MISSISSIPPI |
| PROJECT DESCRIPTION | NEW CONSTRUCTION |
| PROJECT NO. | 31942982 |
| GSA PM | STEVEN SMITH |
| SUBMISSION | ISSUED FOR CONSTRUCTION |
| SUB. DATE | 09/08/2008 |

DRAWING

| | |
|---|---|
| DRAWING TITLE | PARTIAL GARAGE LEVEL PLAN – AREA 4 |
| FILE NAME | S-114-N0095730.DWG |
| FLOOR NO. | GARAGE LEVEL |
| DRAWN BY | JVS DATE DRAFTED: |
| CHECKED BY | MWZ SHEET SIZE: 34 X 44 |
| DRAWING NO. | 37 S 1 14 DISCIPLINE SHEET TYPE SEQUENCE |

SHEET 000 OF 000

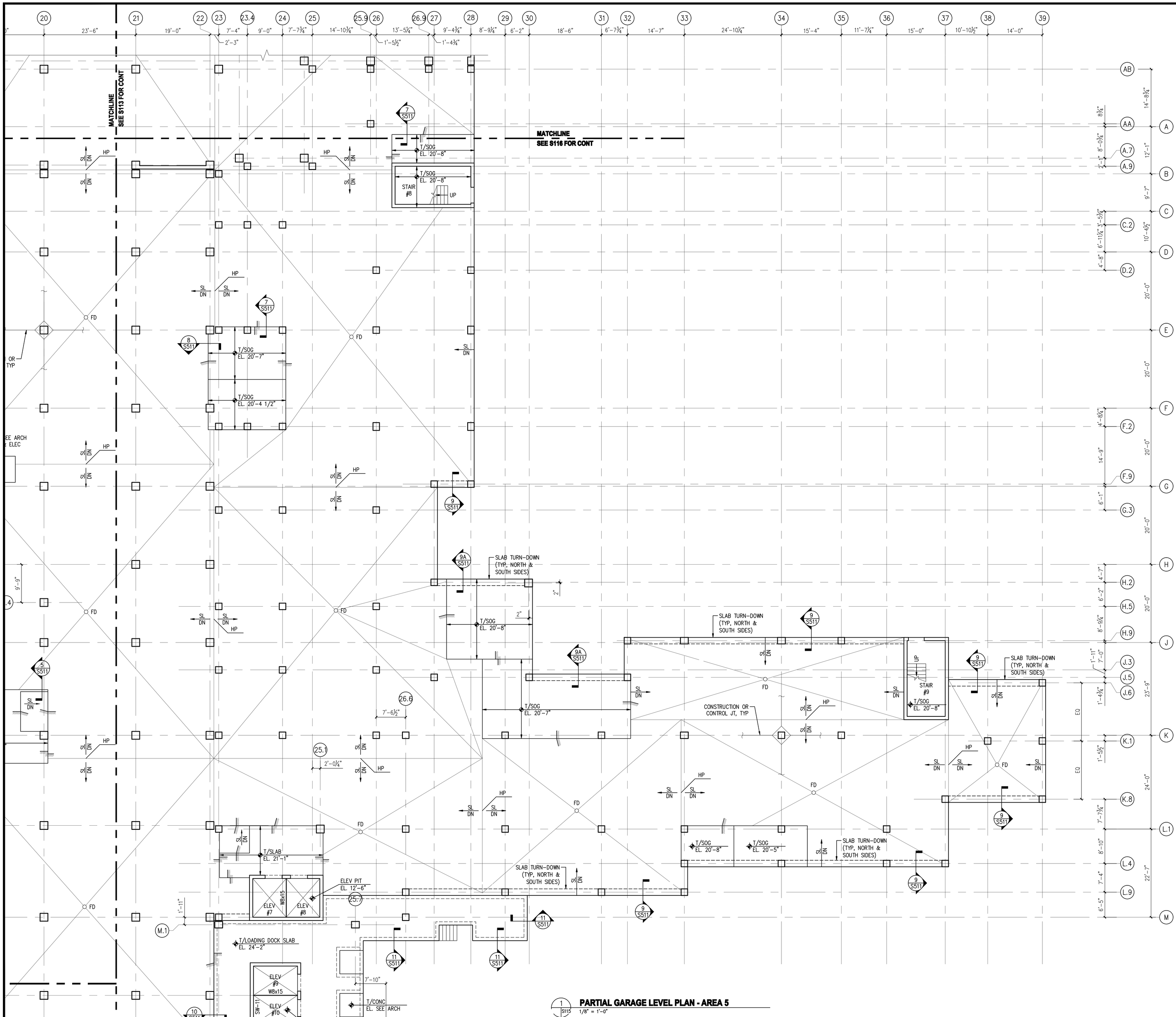


1 S115 **PARTIAL GARAGE LEVEL PLAN - AREA 5**

1/8" = 1'-0"

SEE S113 FOR PLAN NOTES.

PROPERTY OF THE UNITED STATES GOVERNMENT – FOR OFFICIAL USE ONLY. Do not remove this notice. Properly destroy documents when no longer needed.

GSA
GENERAL SERVICES ADMINISTRATION
77 FORSYTH STREET
SUITE 600
ATLANTA, GA 30303
TEL: (404)331-3200

AFRH The Premier Retirement Community for America's Veterans

JACOBS
PROJECT MANAGEMENT CONSULTANT TO THE GENERAL SERVICES ADMINISTRATION

YATES CONSTRUCTION

SFCS Architecture Engineering Planning Interiors

URS
URS CORPORATION
2020 K ST, NW
SUITE 300
WASHINGTON D.C. 20006

ISSUED FOR CONSTRUCTION

CERTIFICATIONS

DISTRICT OF COLUMBIA
MARK W. ZIMPELMAN
8572
REGISTERED
PROFESSIONAL ENGINEER
09/08/08

KEY PLAN

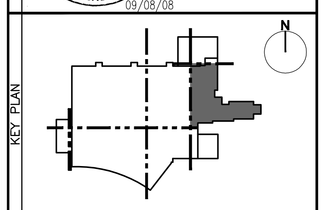


REVISION NOTES

| MARK | DATE | DESCRIPTION |
|---|---|---|
| 37 | 09/08/08 | ISSUED FOR CONSTRUCTION |

GRAPHIC SCALE

CONTRACTORS

| | |
|---|---|
| A/E CON. NO. | GS-04P-07-EX-C-0099 |
| A/E TASK NO. | |
| CONS. CONTR. | |
| CONS. WORK | |
| PRIME A/E | |
| SUB A/E | |
| CONSTR. CON. | |

BUILDING

| | |
|---|---|
| NAME | ARMED FORCES RETIREMENT HOME |
| STREET | 1800 BEACH DRIVE |
| CITY/ST./ZIP | GULFPORT, MS 39507 |
| BUILDING NO. | |
| OTHER BUILDING NOs. | |
| FACILITY CODE | |

PROJECT

| | |
|---|---|
| PROJECT TITLE | ARMED FORCES RETIREMENT HOME GULFPORT, MISSISSIPPI |
| PROJECT DESCRIPTION | NEW CONSTRUCTION |
| PROJECT NO. | 31942982 |
| GSA PM | STEVEN SMITH |
| SUBMISSION | ISSUED FOR CONSTRUCTION |
| SUB. DATE | 09/08/2008 |

DRAWING

| | |
|---|---|
| DRAWING TITLE | PARTIAL GARAGE LEVEL PLAN – AREA 5 |
| FILE NAME | S-115-N0095730.DWG |
| FLOOR NO. | GARAGE LEVEL |
| DRAWN BY | JVS DATE DRAFTED: |
| CHECKED BY | MWZ SHEET SIZE: 34 X 44 |
| DRAWING NO. | 37 S 1 15 DISCIPLINE SHEET TYPE SEQUENCE |

SHEET 000 OF 000

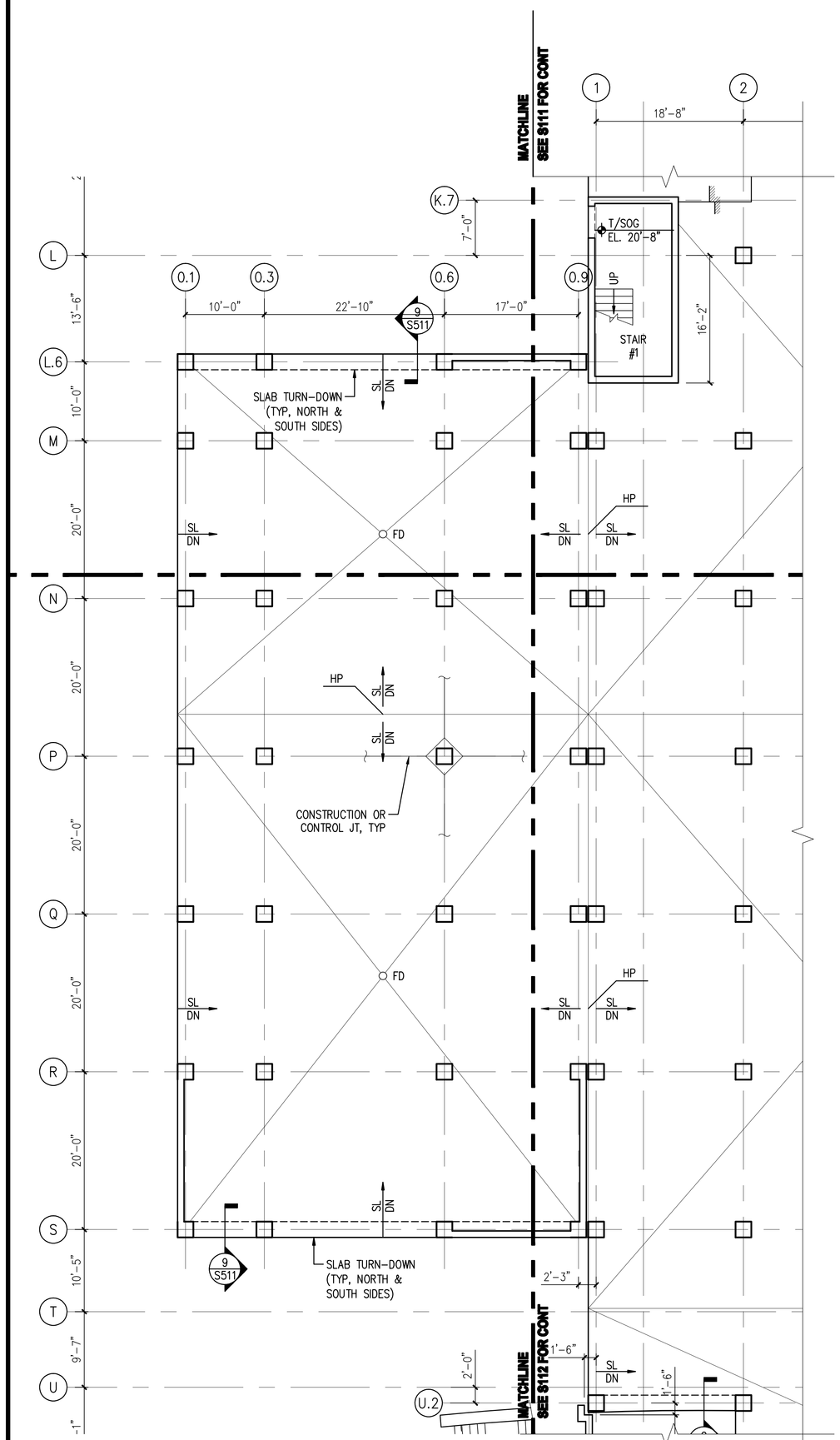


1 S116 **PARTIAL GARAGE LEVEL PLAN - MECH ROOM #1**
1/8" = 1'-0"
SEE S113 FOR PLAN NOTES.

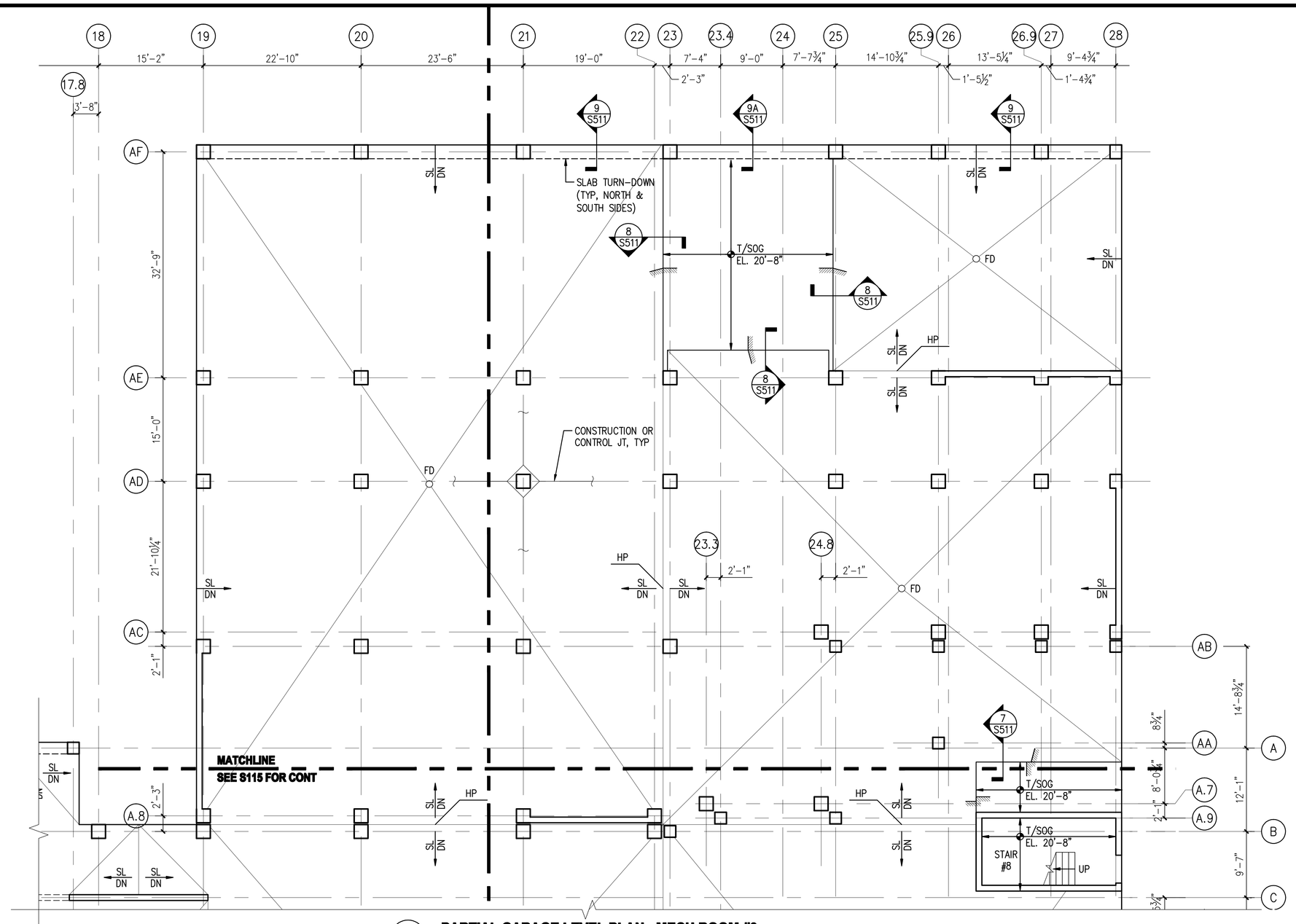


3 S116 **PARTIAL GARAGE LEVEL PLAN - MECH ROOM #3**
1/8" = 1'-0"
SEE S113 FOR PLAN NOTES.

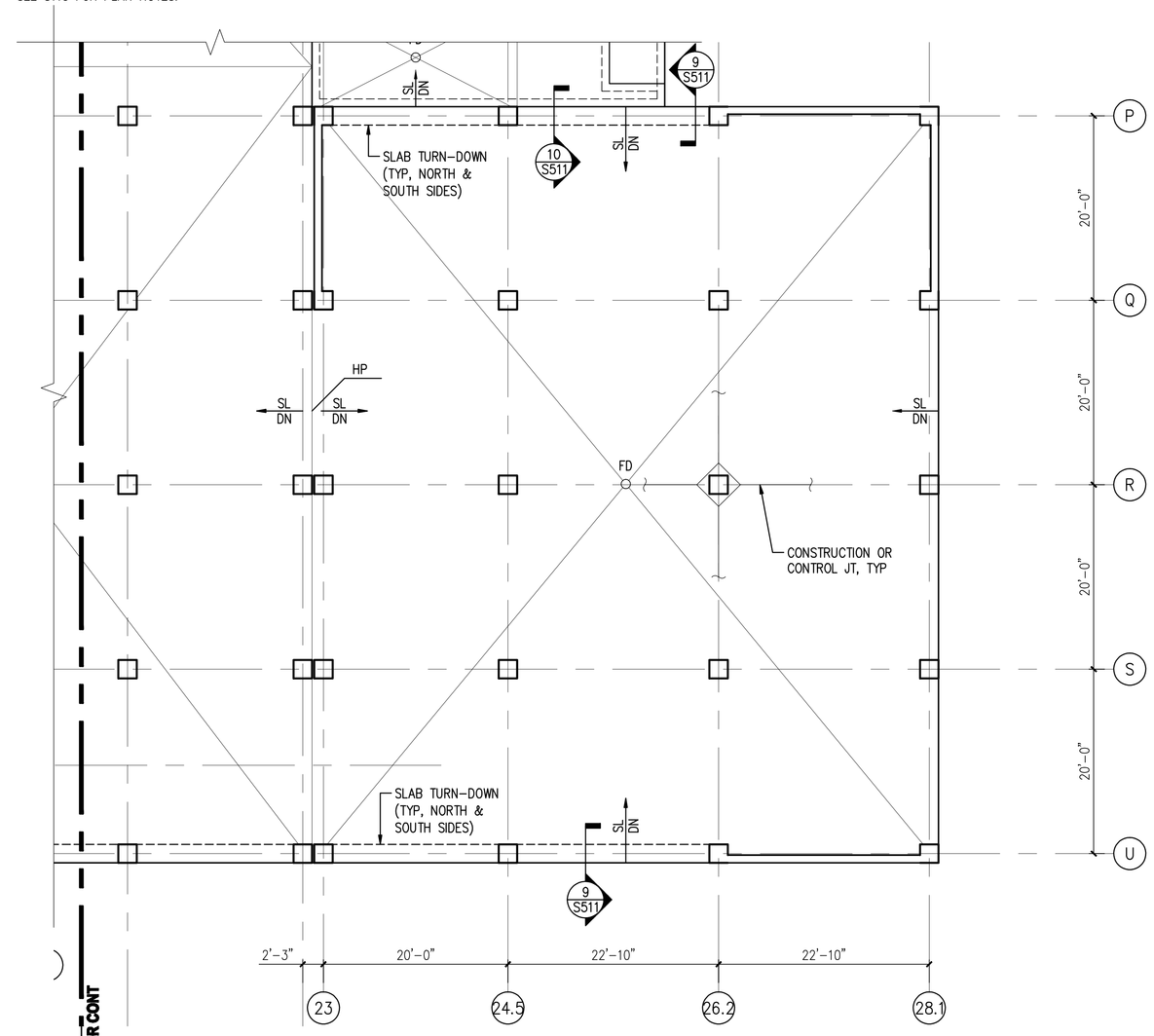


2 S116 **PARTIAL GARAGE LEVEL PLAN - MECH ROOM #2**
1/8" = 1'-0"
SEE S113 FOR PLAN NOTES.

PROPERTY OF THE UNITED STATES GOVERNMENT – FOR OFFICIAL USE ONLY. Do not remove this notice. Properly destroy documents when no longer needed.

GENERAL SERVICES ADMINISTRATION
77 FORSYTH STREET
SUITE 600
ATLANTA, GA 30303
TEL: (404)331-3200

JACOBS
PROJECT MANAGEMENT CONSULTANT TO
THE GENERAL SERVICES ADMINISTRATION

YATES CONSTRUCTION

SFCS Architecture Engineering Planning Interiors

URS CORPORATION
2020 K ST, NW
SUITE 300
WASHINGTON D.C. 20006

ISSUED FOR CONSTRUCTION

CERTIFICATIONS

DISTRICT OF COLUMBIA
MARK W. ZIMPELMAN
8572
REGISTERED
PROFESSIONAL ENGINEER
09/08/08

KEY PLAN

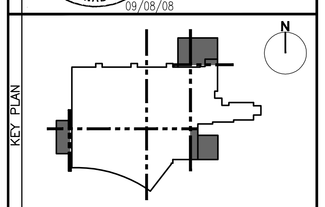


REVISION NOTES

| MARK | DATE | DESCRIPTION |
|---|---|---|
| 0 | 09/08/08 | ISSUED FOR CONSTRUCTION |

GRAPHIC SCALE

CONTRACTORS

| | |
|---|---|
| A/E CON. NO. | GS-04P-07-EX-C-0099 |
| A/E TASK NO. | |
| CONS. CONTR. | |
| CONS. WORK | |
| PRIME A/E | |
| SUB A/E | |
| CONSTR. CON. | |

BUILDING

| | |
|---|---|
| NAME | ARMED FORCES RETIREMENT HOME |
| STREET | 1800 BEACH DRIVE |
| CITY/ST./ZIP | GULFPORT, MS 39507 |
| BUILDING NO. | |
| OTHER BUILDING NOs. | |
| FACILITY CODE | |

PROJECT

| | |
|---|---|
| PROJECT TITLE | ARMED FORCES RETIREMENT HOME GULFPORT, MISSISSIPPI |
| PROJECT DESCRIPTION | NEW CONSTRUCTION |
| PROJECT NO. | 31942982 |
| GSA PM | STEVEN SMITH |
| SUBMISSION | ISSUED FOR CONSTRUCTION |
| SUB. DATE | 09/08/2008 |

DRAWING

| | |
|---|---|
| DRAWING TITLE | PARTIAL GARAGE LVL PLAN – MECH ROOMS |
| FILE NAME | S-116-N0095730.DWG |
| FLOOR NO. | GARAGE LEVEL |
| DRAWN BY | JVS DATE DRAFTED: |
| CHECKED BY | MWZ SHEET SIZE: 34 X 44 |
| DRAWING NO. | S 1 16 |
| | DISCIPLINE SHEET TYPE SEQUENCE |
| | SHEET 000 OF 000 |

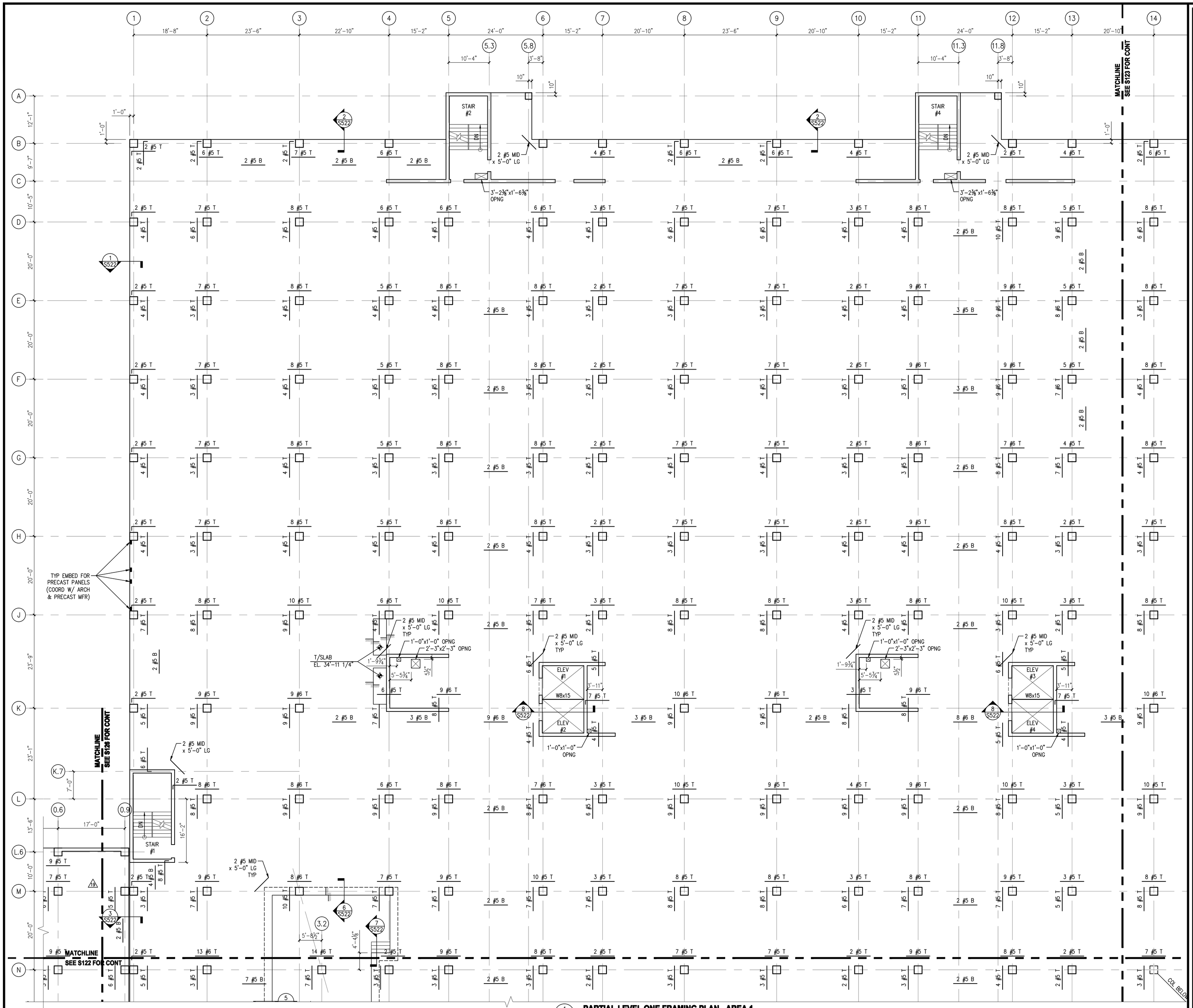


## PARTIAL LEVEL ONE FRAMING PLAN - AREA 1

1/8" = 1'-0"

SEE S123 FOR PLAN NOTES.

PROPERTY OF THE UNITED STATES GOVERNMENT – FOR OFFICIAL USE ONLY. Do not remove this notice. Properly destroy documents when no longer needed.


GSA
GENERAL SERVICES ADMINISTRATION
77 FORSYTH STREET
SUITE 600
ATLANTA, GA 30303
TEL: (404)331-3200

AFRH The Premier Retirement Community for America's Veterans

JACOBS
PROJECT MANAGEMENT CONSULTANT TO THE GENERAL SERVICES ADMINISTRATION

YATES CONSTRUCTION

SFCS Architecture Engineering Planning Interiors

URS
URS CORPORATION
2020 K ST, NW
SUITE 300
WASHINGTON D.C. 20006


ISSUED FOR CONSTRUCTION

CERTIFICATIONS

DISTRICT OF COLUMBIA
MARK W. ZIMPELMAN
8572
REGISTERED PROFESSIONAL ENGINEER
09/08/08

KEY PLAN

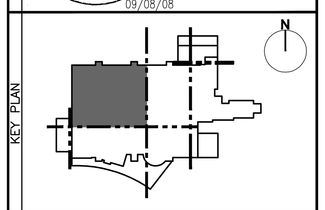

REVISION NOTES

| MARK | DATE | DESCRIPTION |
|---|---|---|
| 8 | 03/25/08 | FIRST FLOOR SLAB SUBMISSION |
| | 03/25/08 | ISSUED FOR CONSTRUCTION |
| 37 | 09/08/08 | RE-ISSUED FOR CONSTRUCTION |

GRAPHIC SCALE

CONTRACTORS

| | |
|---|---|
| A/E CON. NO. | GS-04P-07-EX-C-0099 |
| A/E TASK NO. | |
| CONS. CONTR. | |
| CONS. WORK | |
| PRIME A/E | |
| SUB A/E | |
| CONSTR. CON. | |

BUILDING

| | |
|---|---|
| NAME | ARMED FORCES RETIREMENT HOME |
| STREET | 1800 BEACH DRIVE |
| CITY/ST./ZIP | GULFPORT, MS 39507 |
| BUILDING NO. | |
| OTHER BUILDING NOs. | |
| FACILITY CODE | |

PROJECT

| | |
|---|---|
| PROJECT TITLE | ARMED FORCES RETIREMENT HOME GULFPORT, MISSISSIPPI |
| PROJECT DESCRIPTION | NEW CONSTRUCTION |
| PROJECT NO. | 31942982 |
| GSA PM | STEVEN SMITH |
| SUBMISSION | ISSUED FOR CONSTRUCTION |
| SUB. DATE | 09/08/2008 |

DRAWING

| | |
|---|---|
| DRAWING TITLE | PARTIAL LEVEL 1 FRAMING PLAN – AREA 1 |
| FILE NAME | S-121-N0095730.DWG |
| FLOOR NO. | LEVEL 1 |
| DRAWN BY | JVS DATE DRAFTED: |
| CHECKED BY | MWZ SHEET SIZE: 34 X 44 |

DRAWING NO. 8 — S 1 21

DISCIPLINE SHEET TYPE SEQUENCE

SHEET 000 OF 000

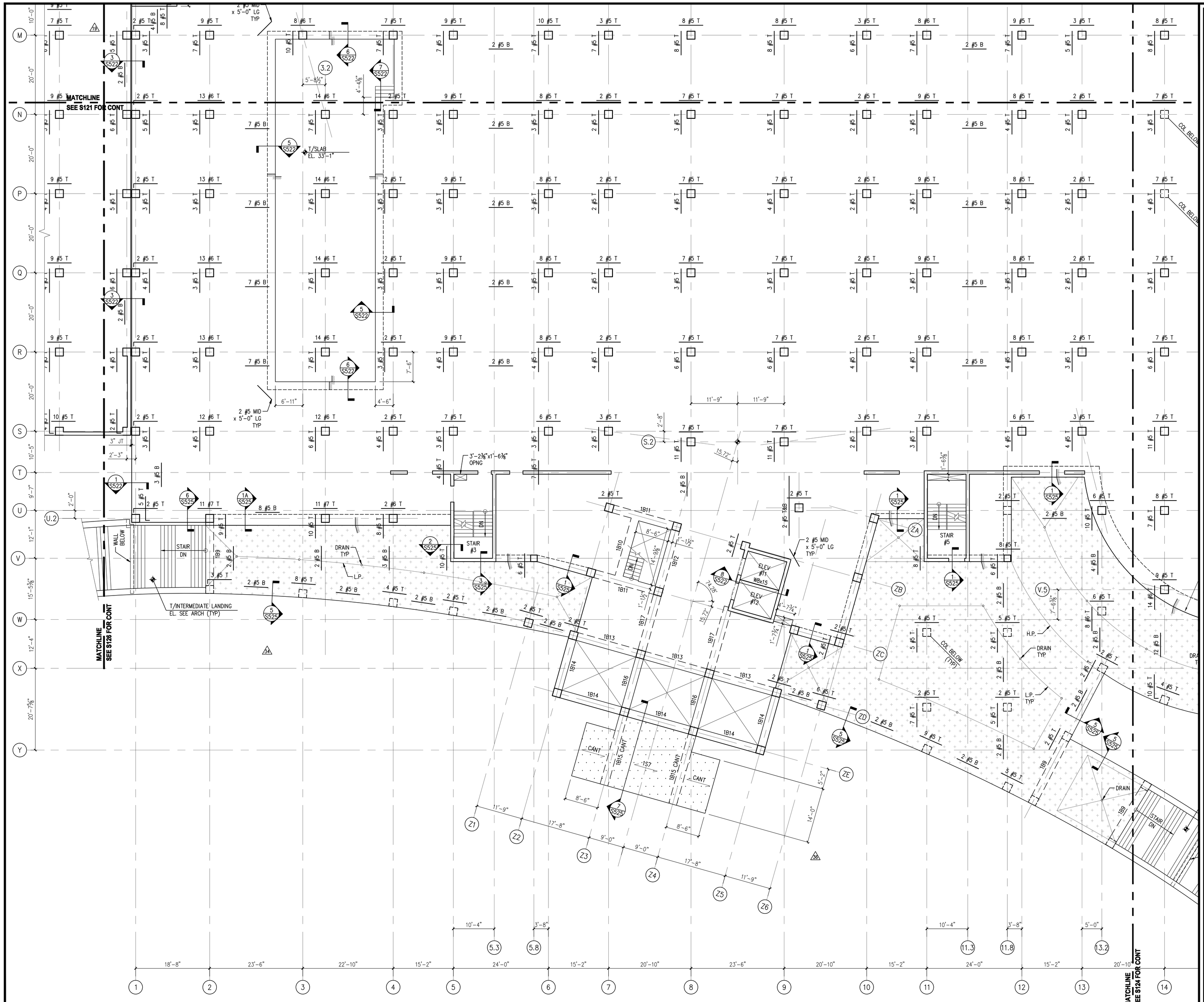


1 S122 **PARTIAL LEVEL ONE FRAMING PLAN - AREA 2**

1/8" = 1'-0"

SEE S123 FOR PLAN NOTES. PROVIDE EPOXY COATED BARS AT TERRACE SLAB.

PROPERTY OF THE UNITED STATES GOVERNMENT – FOR OFFICIAL USE ONLY. Do not remove this notice. Properly destroy documents when no longer needed.

GSA
GENERAL SERVICES ADMINISTRATION
77 FORSYTH STREET
SUITE 600
ATLANTA, GA 30303
TEL: (404)331-3200

AFRH The Premier Retirement Community for America's Veterans

JACOBS
PROJECT MANAGEMENT CONSULTANT TO THE GENERAL SERVICES ADMINISTRATION

YATES CONSTRUCTION

SFCS Architecture Engineering Planning Interiors

URS
URS CORPORATION
2020 K ST, NW
SUITE 300
WASHINGTON D.C. 20006

ISSUED FOR CONSTRUCTION

CERTIFICATIONS

DISTRICT OF COLUMBIA
MARK W. ZIMPELMAN
8572
REGISTERED PROFESSIONAL ENGINEER
09/08/08

KEY PLAN

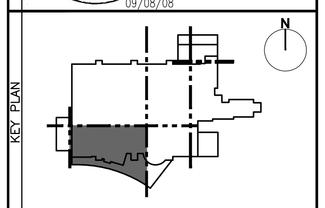

REVISION NOTES

| MARK | DATE | DESCRIPTION |
|---|---|---|
| 3 | 03/25/08 | FIRST FLOOR SLAB SUBMISSION |
| | 03/25/08 | ISSUED FOR CONSTRUCTION |
| 3A | 08/18/08 | REVISED ENTRY & LOADING DOCK |
| 3B | 08/29/08 | ENTRY CANOPY |
| 3C | 09/08/08 | RE-ISSUED FOR CONSTRUCTION |

DRAWING SCALE

CONTRACTORS

| | |
|---|---|
| A/E CON. NO. | GS-04P-07-EX-C-0099 |
| A/E TASK NO. | |
| CONS. CONTR. | |
| CONS. WORK | |
| PRIME A/E | |
| SUB A/E | |
| CONSTR. CON. | |

BUILDING

| | |
|---|---|
| NAME | ARMED FORCES RETIREMENT HOME |
| STREET | 1800 BEACH DRIVE |
| CITY/ST./ZIP | GULFPORT, MS 39507 |
| BUILDING NO. | |
| OTHER BUILDING NOs. | |
| FACILITY CODE | |

PROJECT

| | |
|---|---|
| PROJECT TITLE | ARMED FORCES RETIREMENT HOME GULFPORT, MISSISSIPPI |
| PROJECT DESCRIPTION | NEW CONSTRUCTION |
| PROJECT NO. | 31942982 |
| GSA PM | STEVEN SMITH |
| SUBMISSION | ISSUED FOR CONSTRUCTION |
| SUB. DATE | 09/08/2008 |

DRAWING

| | |
|---|---|
| DRAWING TITLE | PARTIAL LEVEL 1 FRAMING PLAN – AREA 2 |
| FILE NAME | S-122-N0095730.DWG |
| FLOOR NO. | LEVEL 1 |
| DRAWN BY | JVS DATE DRAFTED: |
| CHECKED BY | MWZ SHEET SIZE: 34 X 44 |
| DRAWING NO. | 3 S 1 22 |
| | DISCIPLINE SHEET TYPE SEQUENCE |
| | SHEET 000 OF 000 |

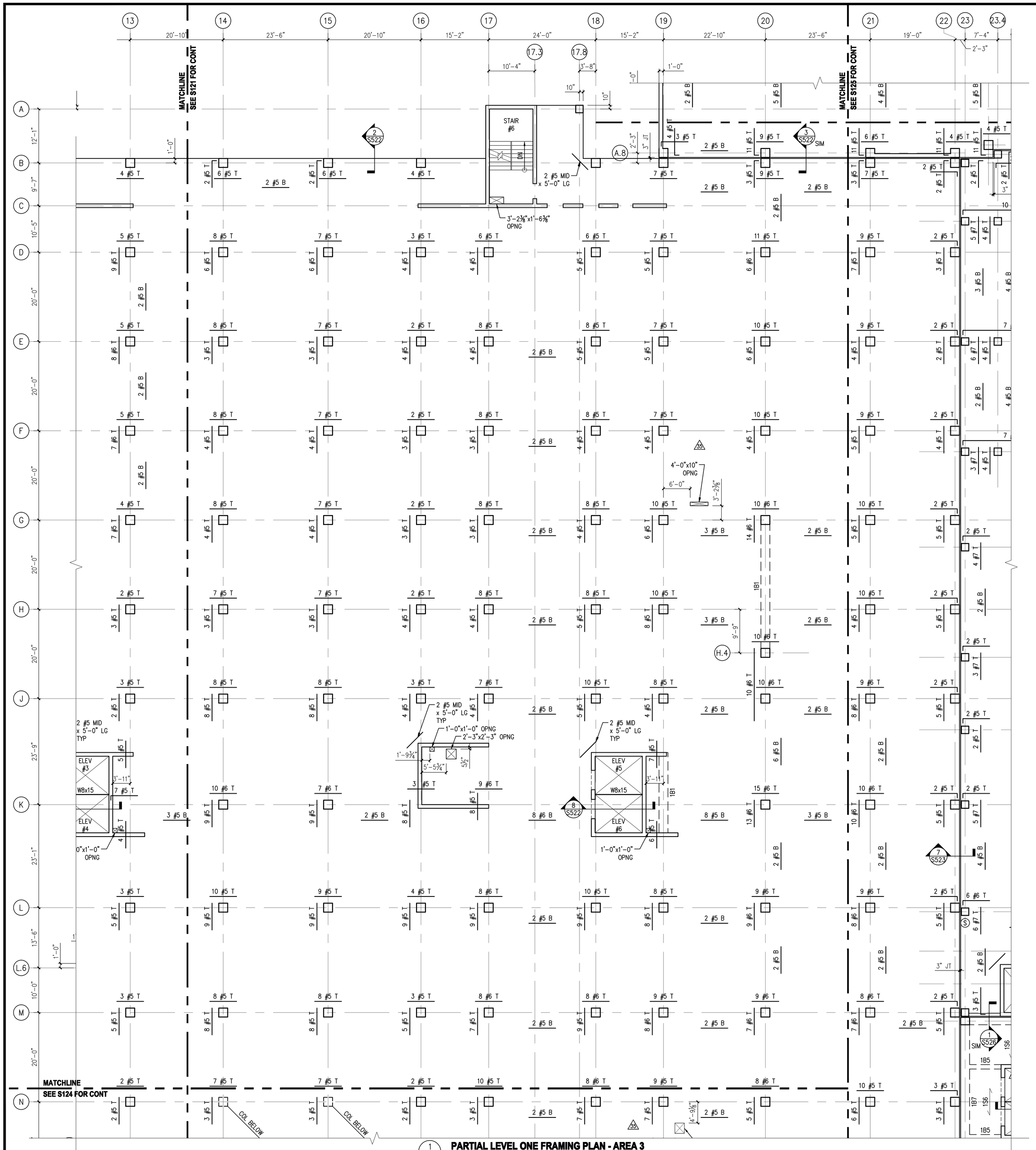


1 S123 **PARTIAL LEVEL ONE FRAMING PLAN - AREA 3**
1/8" = 1'-0"

PLAN NOTES:

1. T/SLAB EL. 35'-0", UNO.
2. TYPICAL FLOOR CONSTRUCTION CONSISTS OF 11" THICK TWO-WAY REINFORCED CONCRETE FLAT SLAB, UNO.
3. SEE SPECIFICATION AND ARCH DRAWINGS FOR SLAB FINISH REQUIREMENTS.
4. TWO-WAY SLAB REINFORCEMENT:
   - PROVIDE BOTTOM MAT OF CONTINUOUS REINFORCMENT CONSISTING OF #5 @ 12" B EACH WAY. ADDITIONAL BOTTOM BARS (IF ANY) ARE INDICATED ON THE PLAN.
   - PROVIDE TOP MAT OF CONTINUOUS REINFORCEMENT CONSISTING #5 @ 12" T EACH WAY. ADDITIONAL TOP BARS (IF ANY) ARE INDICATED ON THE PLAN.
5. SLAB REINF IN EAST-WEST DIRECTION (PARALLEL TO GRIDLINES A THROUGH W.4) SHALL BE OUTERMOST LAYERS OF TOP AND BOTTOM BARS. SLAB REINF IN NORTH-SOUTH DIRECTION (PARALLEL TO GRIDLINES 1 THROUGH 39) SHALL BE INNERMOST LAYERS OF TOP AND BOTTOM BARS.
6. CENTER ALL BEAMS ON GRIDLINES, UNO.
7. PROVIDE EPOXY COATED BARS AT TERRACE PLAZA SLAB (SEE S122 & S124) AND NORTH MECHANICAL ROOM #3 EXTERIOR SLAB (SEE S126).
8. COORDINATE SIZE AND LOCATION OF ALL OPENINGS, SLEEVES, FLOOR DEPRESSIONS, DRAINS, DOOR OPENINGS, CURBS, PADS, LEDGES, EMBEDS, INSERTS, ETC WITH ARCH, CIVIL & MEP DRAWINGS.
9. SEE S521 FOR SLAB TYPICAL DETAILS.
10. SEE S531 FOR BEAM TYPICAL DETAILS.
11. SEE S611 FOR ONE-WAY SLAB AND BEAM SCHEDULES.
12. SEE S601 TO S608 FOR COLUMN SCHEDULE.
13. DENOTES ROOF AREA.
14. DENOTES EXPOSED SLAB AREA.
15. INFORMATION CONTAINED ON THIS DRAWING IS BOUND BY THE MATCHLINE. FOR INFORMATION BEYOND THE MATCHLINE, SEE ADJACENT AREA.

PROPERTY OF THE UNITED STATES GOVERNMENT – FOR OFFICIAL USE ONLY. Do not remove this notice. Properly destroy documents when no longer needed.

GSA
GENERAL SERVICES ADMINISTRATION
77 FORSYTH STREET
SUITE 600
ATLANTA, GA 30303
TEL: (404)331-3200

AFRH The Premier Retirement Community for America's Veterans
JACOBS PROJECT MANAGEMENT CONSULTANT TO THE GENERAL SERVICES ADMINISTRATION
YATES CONSTRUCTION
SFCS Architecture Engineering Planning Interiors
URS CORPORATION
2020 K ST, NW
SUITE 300
WASHINGTON D.C. 20006

ISSUED FOR CONSTRUCTION

CERTIFICATIONS: DISTRICT OF COLUMBIA MARK W. ZIMPELMAN 8572 REGISTERED PROFESSIONAL ENGINEER 09/08/08

KEY PLAN

| REVISION NOTES | | |
|---|---|---|
| MARK | DATE | DESCRIPTION |
| A | 03/25/08 | FIRST FLOOR SLAB SUBMISSION |
| | 03/25/08 | ISSUED FOR CONSTRUCTION |
| B | 08/21/08 | ADD LEVEL 1 OPNGS & TRENCHES |
| C | 09/08/08 | RE-ISSUED FOR CONSTRUCTION |

GRAPHIC SCALE

| CONTRACTORS | |
|---|---|
| A/E CON. NO. | GS-04P-07-EX-C-0099 |
| A/E TASK NO. | |
| CONS. CONTR. | |
| CONS. WORK | |
| PRIME A/E | |
| SUB A/E | |
| CONSTR. CON. | |

| BUILDING | |
|---|---|
| NAME | ARMED FORCES RETIREMENT HOME |
| STREET | 1800 BEACH DRIVE |
| CITY/ST./ZIP | GULFPORT, MS 39507 |
| BUILDING NO. | |
| OTHER BUILDING NOs. | |
| FACILITY CODE | |

| PROJECT | |
|---|---|
| PROJECT TITLE | ARMED FORCES RETIREMENT HOME GULFPORT, MISSISSIPPI |
| PROJECT DESCRIPTION | NEW CONSTRUCTION |
| PROJECT NO. | 31942982 |
| GSA PM | STEVEN SMITH |
| SUBMISSION | ISSUED FOR CONSTRUCTION |
| SUB. DATE | 09/08/2008 |

| DRAWINGS | |
|---|---|
| DRAWING TITLE | PARTIAL LEVEL 1 FRAMING PLAN – AREA 3 |
| FILE NAME | S-123-N0095730.DWG |
| FLOOR NO. | LEVEL 1 |
| DRAWN BY | JVS DATE DRAFTED: |
| CHECKED BY | MWZ SHEET SIZE: 34 X 44 |
| DRAWING NO. | A S 1 23 (DISCIPLINE / SHEET TYPE / SEQUENCE) |
| | SHEET 000 OF 000 |

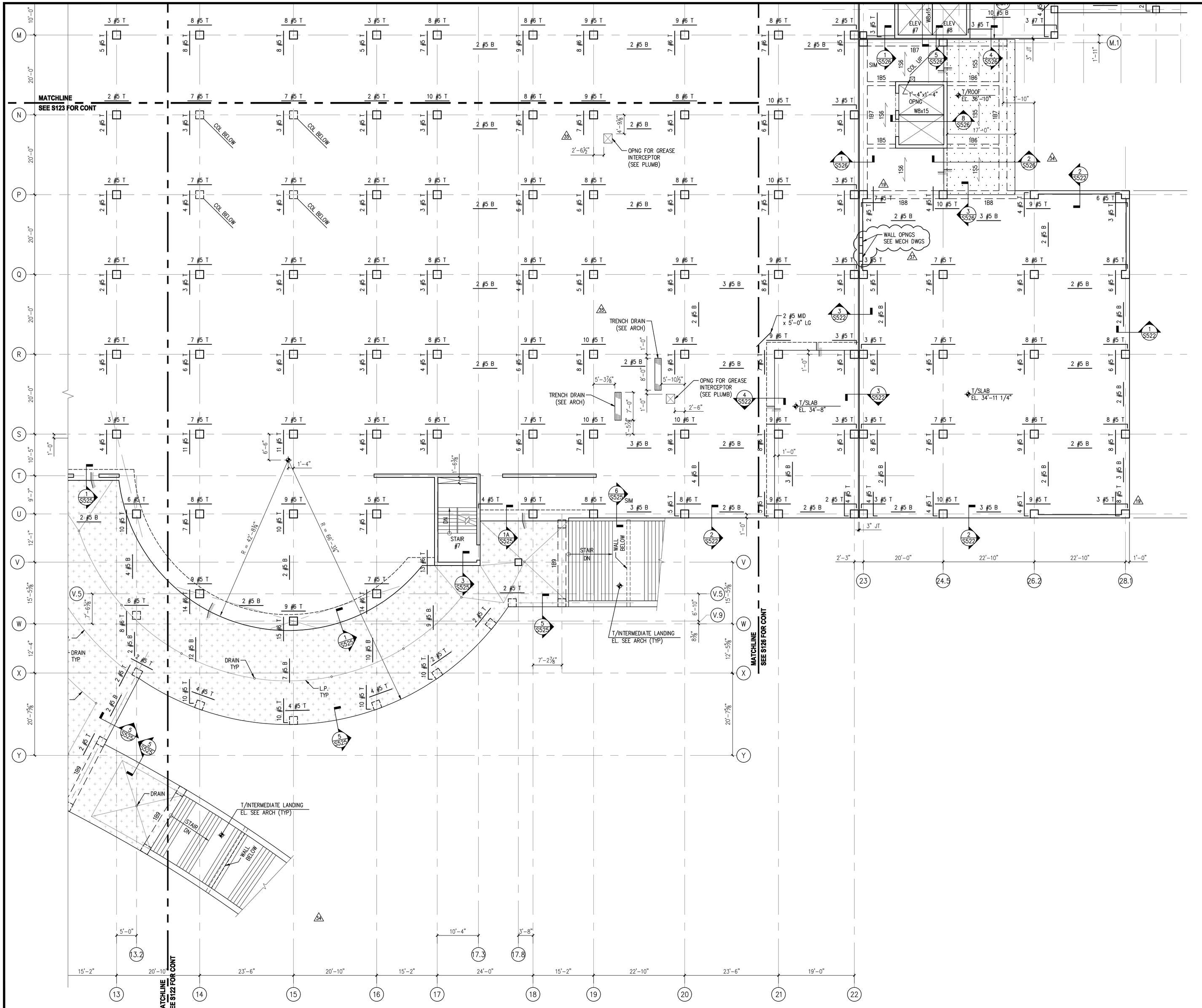


## PARTIAL LEVEL ONE FRAMING PLAN - AREA 4

1/8" = 1'-0"

SEE S123 FOR PLAN NOTES. PROVIDE EPOXY COATED BARS AT TERRACE SLAB.

PROPERTY OF THE UNITED STATES GOVERNMENT – FOR OFFICIAL USE ONLY. Do not remove this notice. Properly destroy documents when no longer needed.

GENERAL SERVICES ADMINISTRATION
77 FORSYTH STREET
SUITE 600
ATLANTA, GA 30303
TEL: (404)331-3200

JACOBS
PROJECT MANAGEMENT CONSULTANT TO THE GENERAL SERVICES ADMINISTRATION

YATES CONSTRUCTION

SFCS Architecture Engineering Planning Interiors

URS CORPORATION
2020 K ST, NW
SUITE 300
WASHINGTON D.C. 20006

ISSUED FOR CONSTRUCTION

CERTIFICATIONS

DISTRICT OF COLUMBIA
MARK W. ZIMPFERMAN
8572
REGISTERED PROFESSIONAL ENGINEER
09/08/08

KEY PLAN

REVISION NOTES

| MARK | DATE | DESCRIPTION |
|---|---|---|
| 8 | 03/25/08 | FIRST FLOOR SLAB SUBMISSION |
| | 03/25/08 | ISSUED FOR CONSTRUCTION |
| 33 | 08/18/08 | REVISED ENTRY & LOADING DOCK |
| 35 | 08/21/08 | ADD LEVEL 1 OPNGS & TRENCHES |
| 37 | 09/08/08 | RE-ISSUED FOR CONSTRUCTION |

GRAPHIC SCALE

| | | |
|---|---|---|
| CONTRACTORS | A/E CON. NO. | GS-04P-07-EX-C-0099 |
| | A/E TASK NO. | |
| | CONS. CONTR. | |
| | CONS. WORK | |
| | PRIME A/E | |
| | SUB A/E | |
| | CONSTR. CON. | |
| BUILDING | NAME | ARMED FORCES RETIREMENT HOME |
| | STREET | 1800 BEACH DRIVE |
| | CITY/ST./ZIP | GULFPORT, MS 39507 |
| | BUILDING NO. | |
| | OTHER BUILDING NOs. | |
| | FACILITY CODE | |
| PROJECT | PROJECT TITLE | ARMED FORCES RETIREMENT HOME GULFPORT, MISSISSIPPI |
| | PROJECT DESCRIPTION | NEW CONSTRUCTION |
| | PROJECT NO. | 31942982 |
| | GSA PM | STEVEN SMITH |
| | SUBMISSION | ISSUED FOR CONSTRUCTION |
| | SUB. DATE | 09/08/2008 |
| DRAWING | DRAWING TITLE | PARTIAL LEVEL 1 FRAMING PLAN – AREA 4 |
| | FILE NAME | S-124-N0095730.DWG |
| | FLOOR NO. | LEVEL 1 |
| | DRAWN BY | JVS DATE DRAFTED: |
| | CHECKED BY | MWZ SHEET SIZE: 34 X 44 |
| | DRAWING NO. | 8 S 1 24 (DISCIPLINE SHEET TYPE SEQUENCE) |
| | | SHEET 000 OF 000 |

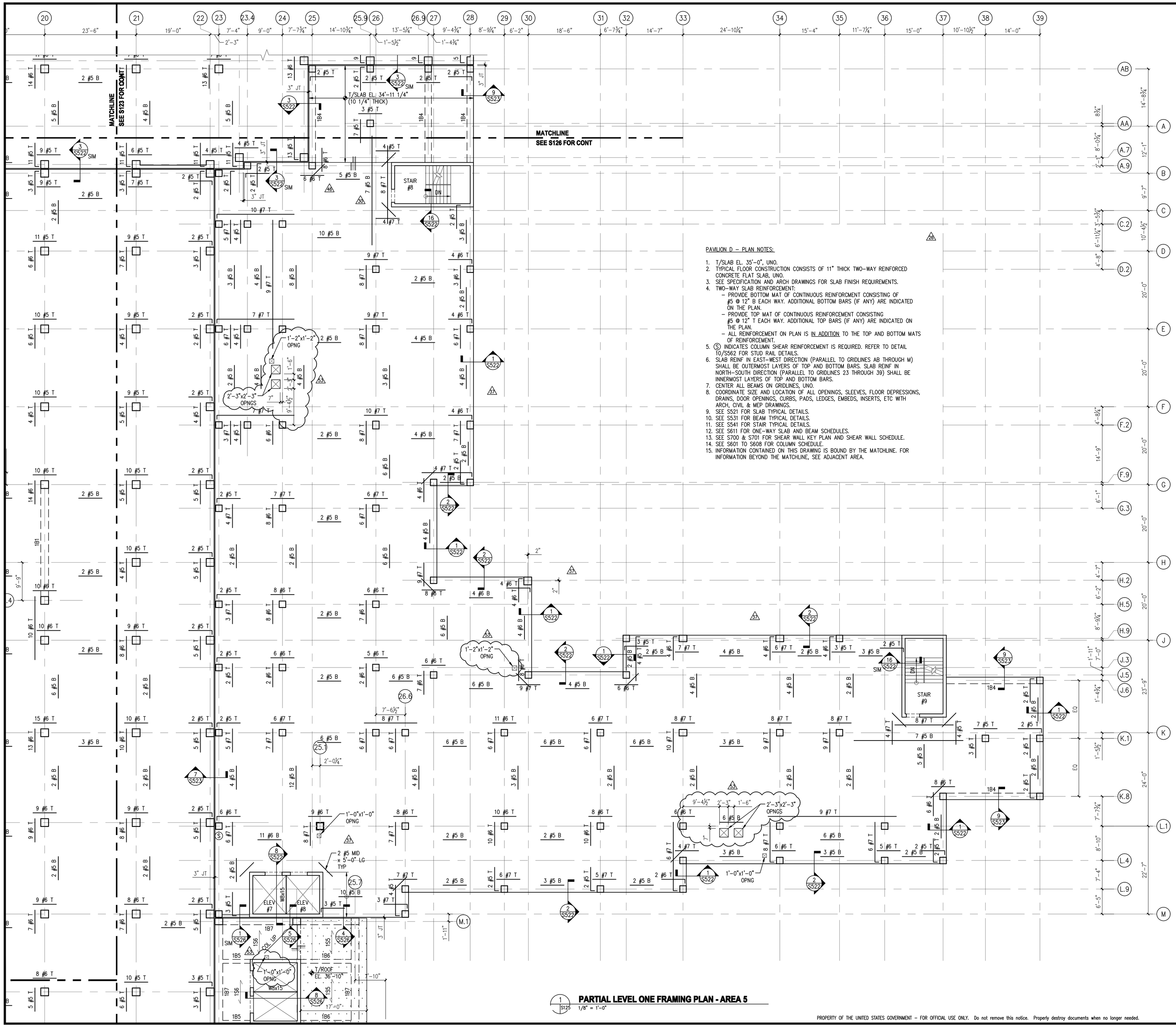


PAVILION D – PLAN NOTES:

1. T/SLAB EL. 35'-0", UNO.
2. TYPICAL FLOOR CONSTRUCTION CONSISTS OF 11" THICK TWO-WAY REINFORCED CONCRETE FLAT SLAB, UNO.
3. SEE SPECIFICATION AND ARCH DRAWINGS FOR SLAB FINISH REQUIREMENTS.
4. TWO-WAY SLAB REINFORCEMENT:
   - PROVIDE BOTTOM MAT OF CONTINUOUS REINFORCMENT CONSISTING OF #5 @ 12" B EACH WAY. ADDITIONAL BOTTOM BARS (IF ANY) ARE INDICATED ON THE PLAN.
   - PROVIDE TOP MAT OF CONTINUOUS REINFORCEMENT CONSISTING #5 @ 12" T EACH WAY. ADDITIONAL TOP BARS (IF ANY) ARE INDICATED ON THE PLAN.
   - ALL REINFORCEMENT ON PLAN IS IN ADDITION TO THE TOP AND BOTTOM MATS OF REINFORCEMENT.
5. (S) INDICATES COLUMN SHEAR REINFORCEMENT IS REQUIRED. REFER TO DETAIL 10/S562 FOR STUD RAIL DETAILS.
6. SLAB REINF IN EAST-WEST DIRECTION (PARALLEL TO GRIDLINES AB THROUGH M) SHALL BE OUTERMOST LAYERS OF TOP AND BOTTOM BARS. SLAB REINF IN NORTH-SOUTH DIRECTION (PARALLEL TO GRIDLINES 23 THROUGH 39) SHALL BE INNERMOST LAYERS OF TOP AND BOTTOM BARS.
7. CENTER ALL BEAMS ON GRIDLINES, UNO.
8. COORDINATE SIZE AND LOCATION OF ALL OPENINGS, SLEEVES, FLOOR DEPRESSIONS, DRAINS, DOOR OPENINGS, CURBS, PADS, LEDGES, EMBEDS, INSERTS, ETC WITH ARCH, CIVIL & MEP DRAWINGS.
9. SEE S521 FOR SLAB TYPICAL DETAILS.
10. SEE S531 FOR BEAM TYPICAL DETAILS.
11. SEE S541 FOR STAIR TYPICAL DETAILS.
12. SEE S611 FOR ONE-WAY SLAB AND BEAM SCHEDULES.
13. SEE S700 & S701 FOR SHEAR WALL KEY PLAN AND SHEAR WALL SCHEDULE.
14. SEE S601 TO S608 FOR COLUMN SCHEDULE.
15. INFORMATION CONTAINED ON THIS DRAWING IS BOUND BY THE MATCHLINE. FOR INFORMATION BEYOND THE MATCHLINE, SEE ADJACENT AREA.

## PARTIAL LEVEL ONE FRAMING PLAN - AREA 5

1/8" = 1'-0"

PROPERTY OF THE UNITED STATES GOVERNMENT – FOR OFFICIAL USE ONLY. Do not remove this notice. Properly destroy documents when no longer needed.

GENERAL SERVICES ADMINISTRATION
77 FORSYTH STREET
SUITE 600
ATLANTA, GA 30303
TEL: (404)331-3200

AFRH The Premier Retirement Community for America's Veterans

JACOBS
PROJECT MANAGEMENT CONSULTANT TO THE GENERAL SERVICES ADMINISTRATION

YATES CONSTRUCTION

SFCS Architecture Engineering Planning Interiors

URS CORPORATION
2020 K ST, NW
SUITE 300
WASHINGTON D.C. 20006

ISSUED FOR CONSTRUCTION

CERTIFICATIONS

DISTRICT OF COLUMBIA
MARK W. ZIMPFELMAN
8572
REGISTERED PROFESSIONAL ENGINEER
10/31/08

KEY PLAN

REVISION NOTES

| MARK | DATE | DESCRIPTION |
|---|---|---|
| A | 03/25/08 | FIRST FLOOR SLAB SUBMISSION |
| | 03/25/08 | ISSUED FOR CONSTRUCTION |
| 26 | 06/20/08 | PENTHOUSE, PH ROOF & PAV D SLABS |
| 30 | 07/21/08 | REVISED POUR STRIP LOCATION |
| 37 | 09/08/08 | RE-ISSUED FOR CONSTRUCTION |
| 46 | 10/01/08 | REVISE REINF AT MECH RMS |
| 53 | 10/31/08 | REVISE SLAB OPENINGS |

DRAWING SCALE

CONTRACTORS

| | |
|---|---|
| A/E CON. NO. | GS-04P-07-EX-C-0099 |
| A/E TASK NO. | |
| CONS. CONTR. | |
| CONS. WORK | |
| PRIME A/E | |
| SUB A/E | |
| CONSTR. CON. | |

BUILDING

| | |
|---|---|
| NAME | ARMED FORCES RETIREMENT HOME |
| STREET | 1800 BEACH DRIVE |
| CITY/ST./ZIP | GULFPORT, MS 39507 |
| BUILDING NO. | |
| OTHER BUILDING NOs. | |
| FACILITY CODE | |

PROJECT

| | |
|---|---|
| PROJECT TITLE | ARMED FORCES RETIREMENT HOME GULFPORT, MISSISSIPPI |
| PROJECT DESCRIPTION | NEW CONSTRUCTION |
| PROJECT NO. | 31942982 |
| GSA PM | STEVEN SMITH |
| SUBMISSION | ISSUED FOR CONSTRUCTION |
| SUB. DATE | 09/08/2008 |

DRAWING

| | |
|---|---|
| DRAWING TITLE | PARTIAL LEVEL 1 FRAMING PLAN – AREA 5 |
| FILE NAME | S-125-N0095730.DWG |
| FLOOR NO. | LEVEL 1 |
| DRAWN BY | JVS DATE DRAFTED: |
| CHECKED BY | MWZ SHEET SIZE: 34 X 44 |
| DRAWING NO. | A S 1 25 |
| | DISCIPLINE SHEET TYPE SEQUENCE |
| | SHEET 000 OF 000 |

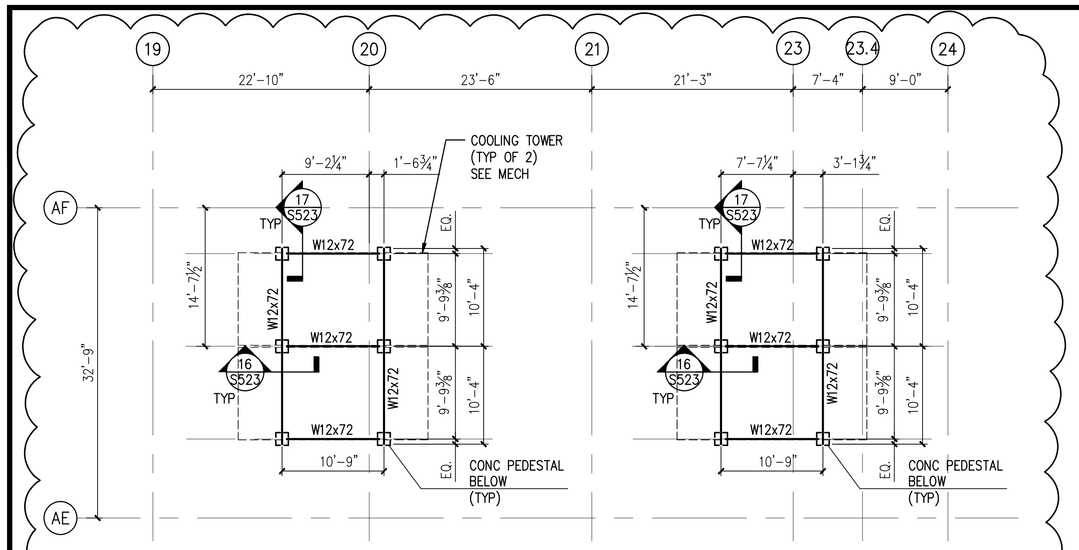


**4 / S126 COOLING TOWER STEEL DUNNAGE FRAMING PLAN - MECH ROOM #3**

1/8" = 1'-0"

PLAN NOTES:

1. T/ CONC PEDESTAL EL. 35'-10¼, UNO.
2. T/STL BEAM EL. 36'-10½", UNO.
3. ALL STEEL SHALL BE HOT-DIPPED GALVANIZED, UNO.
4. COORD DIMENSIONS W/ COOLING TOWER MANUF PRIOR TO FABRICATION.

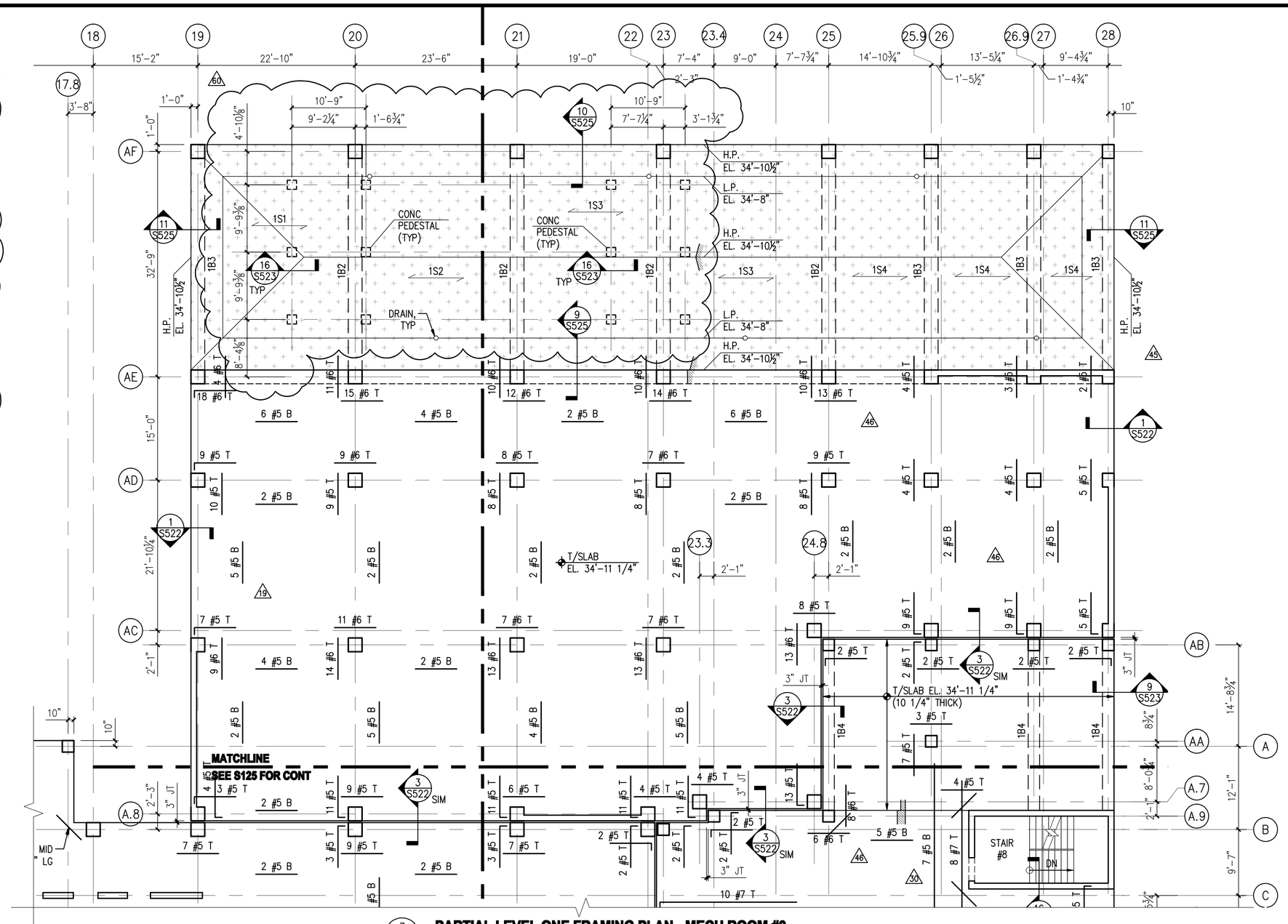


**3 / S126 PARTIAL LEVEL ONE FRAMING PLAN - MECH ROOM #3**

1/8" = 1'-0"

SEE S123 FOR PLAN NOTES.

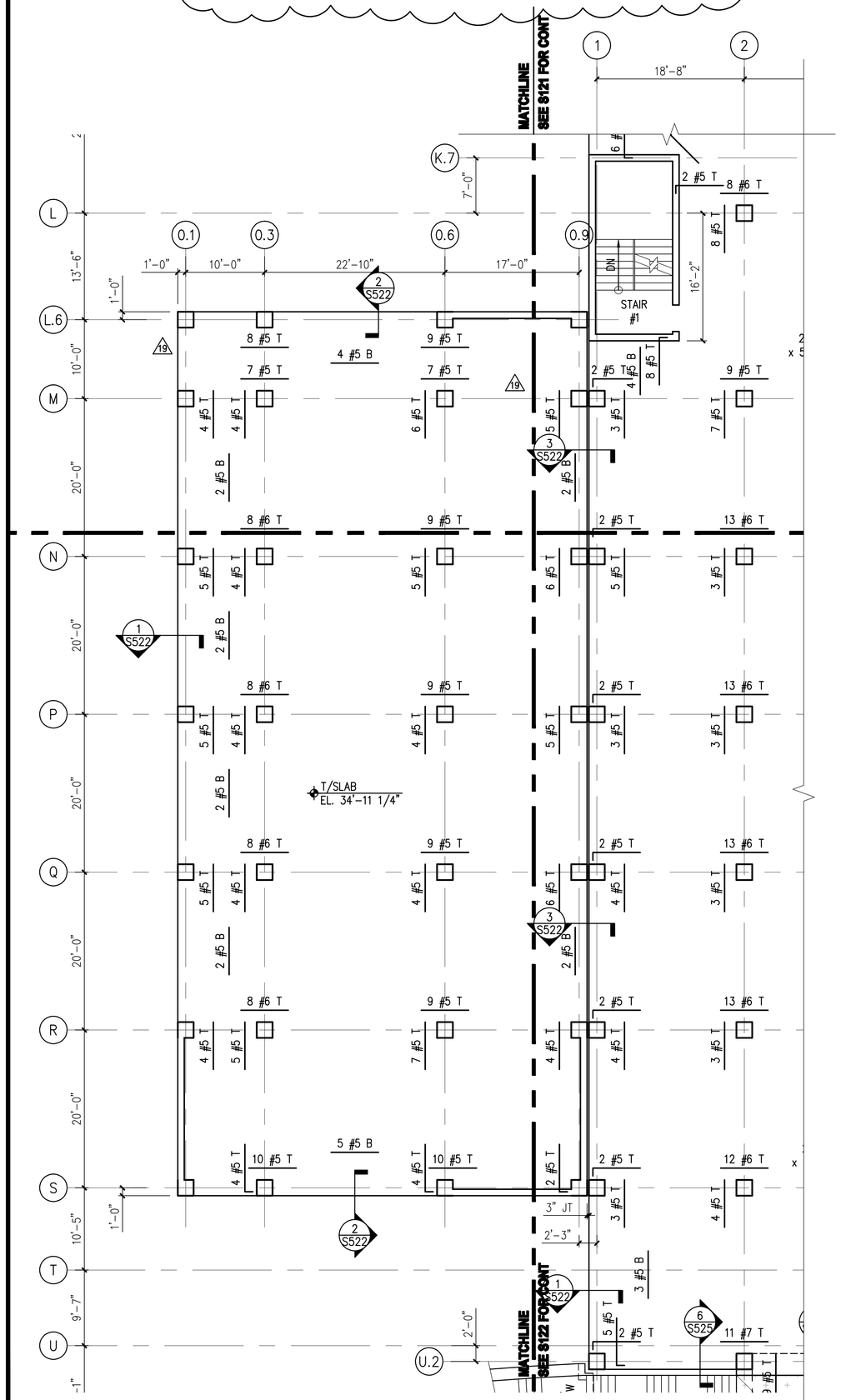


**1 / S126 PARTIAL LEVEL ONE FRAMING PLAN - MECH ROOM #1**

1/8" = 1'-0"

SEE S123 FOR PLAN NOTES.

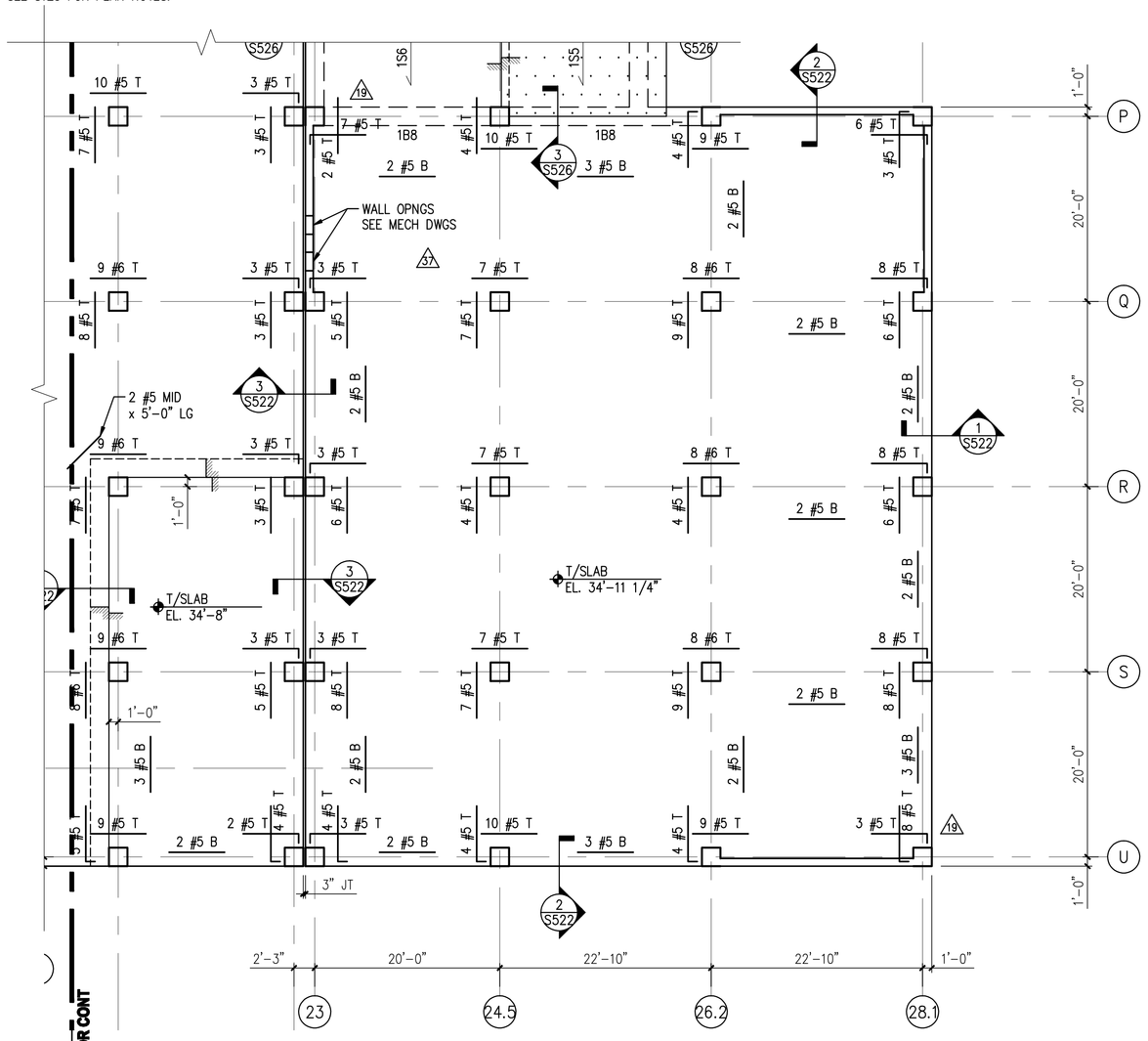


**2 / S126 PARTIAL LEVEL ONE FRAMING PLAN - MECH ROOM #2**

1/8" = 1'-0"

SEE S123 FOR PLAN NOTES.

PROPERTY OF THE UNITED STATES GOVERNMENT – FOR OFFICIAL USE ONLY. Do not remove this notice. Properly destroy documents when no longer needed.

GENERAL SERVICES ADMINISTRATION
77 FORSYTH STREET
SUITE 600
ATLANTA, GA 30303
TEL: (404)331-3200

AFRH The Premier Retirement Community for America's Veterans

JACOBS
PROJECT MANAGEMENT CONSULTANT TO THE GENERAL SERVICES ADMINISTRATION

YATES CONSTRUCTION

SFCS Architecture Engineering Planning Interiors

URS CORPORATION
2020 K ST, NW
SUITE 300
WASHINGTON D.C. 20006

ISSUED FOR CONSTRUCTION

CERTIFICATIONS

DISTRICT OF COLUMBIA — MARK W. ZIMPFLEMAN — 8572 — REGISTERED PROFESSIONAL ENGINEER — 12/02/08

KEY PLAN

REVISION NOTES

| MARK | DATE | DESCRIPTION |
|---|---|---|
| A | 03/25/08 | FIRST FLOOR SLAB SUBMISSION |
| | 03/25/08 | ISSUED FOR CONSTRUCTION |
| 19 | 05/12/08 | ADD REINF AT CMU WALLS |
| 37 | 09/08/08 | RE-ISSUED FOR CONSTRUCTION |
| 46 | 09/25/08 | ADD SLOPES AT MECH RM #3 |
| 49 | 10/01/08 | REVISE REINF AT MECH RMS |
| 60 | 12/02/08 | CIVIL, STRUCT, ARCH REV |

DRAWING SCALE

CONTRACTORS

| | |
|---|---|
| A/E CON. NO. | GS-04P-07-EX-C-0099 |
| A/E TASK NO. | |
| CONS. CONTR. | |
| CONS. WORK | |
| PRIME A/E | |
| SUB A/E | |
| CONSTR. CON. | |

BUILDING

| | |
|---|---|
| NAME | ARMED FORCES RETIREMENT HOME |
| STREET | 1800 BEACH DRIVE |
| CITY/ST./ZIP | GULFPORT, MS 39507 |
| BUILDING NO. | |
| OTHER | |
| BUILDING NOs. | |
| FACILITY CODE | |

PROJECT

| | |
|---|---|
| PROJECT TITLE | ARMED FORCES RETIREMENT HOME GULFPORT, MISSISSIPPI |
| PROJECT DESCRIPTION | NEW CONSTRUCTION |
| PROJECT NO. | 31942982 |
| GSA PM | STEVEN SMITH |
| SUBMISSION | ISSUED FOR CONSTRUCTION |
| SUB. DATE | 09/08/2008 |

DRAWING

| | |
|---|---|
| DRAWING TITLE | PARTIAL LVL 1 FRAMING PLAN – MECH RMS |
| FILE NAME | S-126-N0095730.DWG |
| FLOOR NO. | LEVEL 1 |
| DRAWN BY | JVS DATE DRAFTED: |
| CHECKED BY | MWZ SHEET SIZE: 34 X 44 |
| DRAWING NO. | A S 1 26 (DISCIPLINE / SHEET TYPE / SEQUENCE) |
| | SHEET 000 OF 000 |

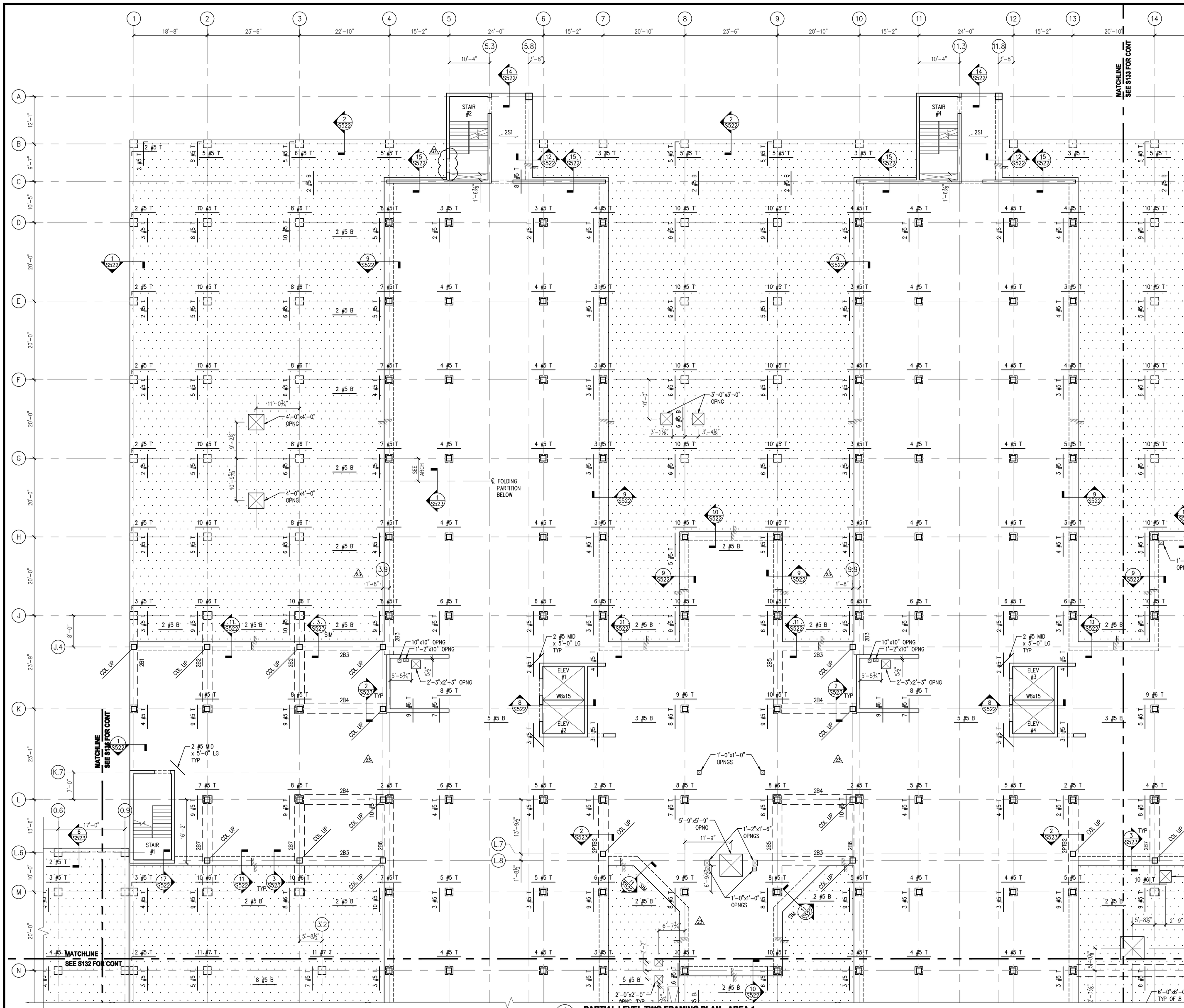


1 S131 **PARTIAL LEVEL TWO FRAMING PLAN - AREA 1**

1/8" = 1'-0"

SEE S133 FOR PLAN NOTES.

PROPERTY OF THE UNITED STATES GOVERNMENT – FOR OFFICIAL USE ONLY. Do not remove this notice. Properly destroy documents when no longer needed.

GENERAL SERVICES ADMINISTRATION
77 FORSYTH STREET
SUITE 600
ATLANTA, GA 30303
TEL: (404)331-3200

AFRH The Premier Retirement Community for America's Veterans

JACOBS
PROJECT MANAGEMENT CONSULTANT TO THE GENERAL SERVICES ADMINISTRATION

YATES CONSTRUCTION

SFCS Architecture Engineering Planning Interiors

URS CORPORATION
2020 K ST, NW
SUITE 300
WASHINGTON D.C. 20006

ISSUED FOR CONSTRUCTION

CERTIFICATIONS

DISTRICT OF COLUMBIA
MARK W. ZIMPELMAN
8572
REGISTERED PROFESSIONAL ENGINEER
09/08/08

KEY PLAN

REVISION NOTES

| MARK | DATE | DESCRIPTION |
|---|---|---|
| 18 | 05/09/08 | LEVEL 2 SLAB – PENETRATIONS |
| | 05/09/08 | ISSUED FOR CONSTRUCTION |
| 23 | 06/10/08 | REVISE OPENINGS & COLUMN SIZE |
| 27 | 09/08/08 | RE-ISSUED FOR CONSTRUCTION |

DRAWING SCALE

CONTRACTORS

| | |
|---|---|
| A/E CON. NO. | GS-04P-07-EX-C-0099 |
| A/E TASK NO. | |
| CONS. CONTR. | |
| CONS. WORK | |
| PRIME A/E | |
| SUB A/E | |
| CONSTR. CON. | |

BUILDING

| | |
|---|---|
| NAME | ARMED FORCES RETIREMENT HOME |
| STREET | 1800 BEACH DRIVE |
| CITY/ST./ZIP | GULFPORT, MS 39507 |
| BUILDING NO. | |
| OTHER | |
| BUILDING NOs. | |
| FACILITY CODE | |

PROJECT

| | |
|---|---|
| PROJECT TITLE | ARMED FORCES RETIREMENT HOME GULFPORT, MISSISSIPPI |
| PROJECT DESCRIPTION | NEW CONSTRUCTION |
| PROJECT NO. | 31942982 |
| GSA PM | STEVEN SMITH |
| SUBMISSION | ISSUED FOR CONSTRUCTION |
| SUB. DATE | 09/08/2008 |

DRAWING

| | |
|---|---|
| DRAWING TITLE | PARTIAL LEVEL 2 FRAMING PLAN – AREA 1 |
| FILE NAME | S-131-N0095730.DWG |
| FLOOR NO. | LEVEL 2 |
| DRAWN BY | JVS DATE DRAFTED: |
| CHECKED BY | MWZ SHEET SIZE: 34 X 44 |
| DRAWING NO. | 18 S 1 31 |

| DISCIPLINE | SHEET TYPE | SEQUENCE |
|---|---|---|
| SHEET | 000 OF | 000 |

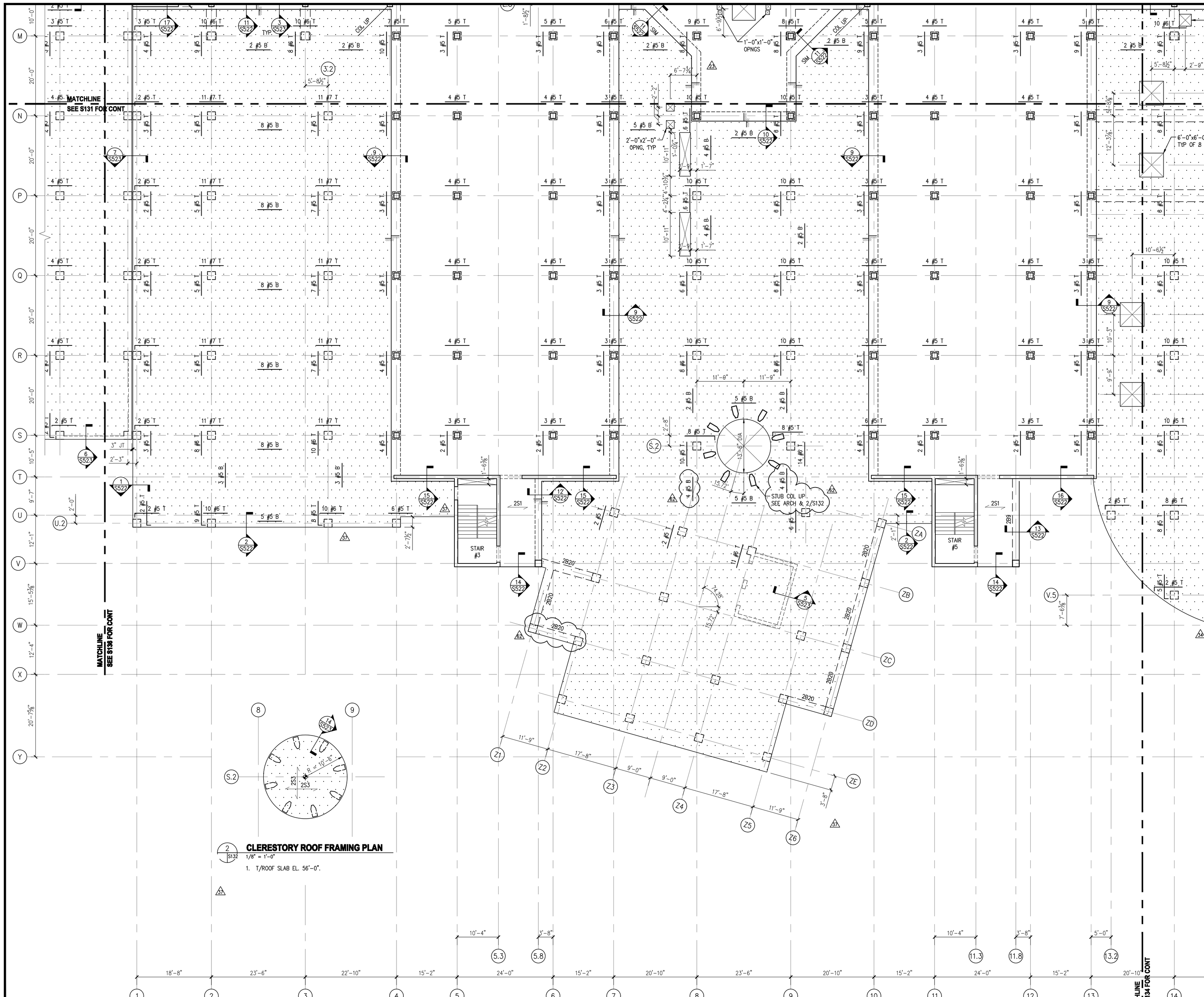


2 S132 **CLERESTORY ROOF FRAMING PLAN**
1/8" = 1'-0"

1. T/ROOF SLAB EL. 56'-0".

1 S132 **PARTIAL LEVEL TWO FRAMING PLAN - AREA 2**
1/8" = 1'-0"
SEE S133 FOR PLAN NOTES.

PROPERTY OF THE UNITED STATES GOVERNMENT – FOR OFFICIAL USE ONLY. Do not remove this notice. Properly destroy documents when no longer needed.

GSA
GENERAL SERVICES ADMINISTRATION
77 FORSYTH STREET
SUITE 600
ATLANTA, GA 30303
TEL: (404)331-3200

AFRH The Premier Retirement Community for America's Veterans

JACOBS
PROJECT MANAGEMENT CONSULTANT TO THE GENERAL SERVICES ADMINISTRATION

YATES CONSTRUCTION

SFCS Architecture Engineering Planning Interiors

URS
URS CORPORATION
2020 K ST, NW
SUITE 300
WASHINGTON D.C. 20006

CERTIFICATIONS

DISTRICT OF COLUMBIA
MARK W. ZIMPELMAN
8572
REGISTERED
PROFESSIONAL ENGINEER
01/09/09

KEY PLAN

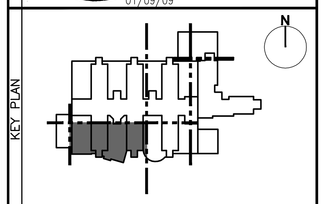

REVISION NOTES

| MARK | DATE | DESCRIPTION |
|---|---|---|
| 18 | 05/09/08 | LEVEL 2 SLAB – PENETRATIONS |
| | 05/09/08 | ISSUED FOR CONSTRUCTION |
| 23 | 06/10/08 | REVISE OPENINGS & COLUMN SIZE |
| 37 | 09/08/08 | RE-ISSUED FOR CONSTRUCTION |
| 62 | 01/09/09 | PENTHOUSE & STEEL REDESIGN |

GRAPHIC SCALE

CONTRACTORS

| | |
|---|---|
| A/E CON. NO. | GS-04P-07-EX-C-0099 |
| A/E TASK NO. | |
| CONS. CONTR. | |
| CONS. WORK | |
| PRIME A/E | |
| SUB A/E | |
| CONSTR. CON. | |

BUILDING

| | |
|---|---|
| NAME | ARMED FORCES RETIREMENT HOME |
| STREET | 1800 BEACH DRIVE |
| CITY/ST./ZIP | GULFPORT, MS 39507 |
| BUILDING NO. | |
| OTHER BUILDING NOs. | |
| FACILITY CODE | |

PROJECT

| | |
|---|---|
| PROJECT TITLE | ARMED FORCES RETIREMENT HOME GULFPORT, MISSISSIPPI |
| PROJECT DESCRIPTION | NEW CONSTRUCTION |
| PROJECT NO. | 31942982 |
| GSA PM | STEVEN SMITH |
| SUBMISSION | ISSUED FOR CONSTRUCTION |
| SUB. DATE | 09/08/2008 |

DRAWING

| | |
|---|---|
| DRAWING TITLE | PARTIAL LEVEL 2 FRAMING PLAN – AREA 2 |
| FILE NAME | S-132-N0095730.DWG |
| FLOOR NO. | LEVEL 2 |
| DRAWN BY | JVS DATE DRAFTED: |
| CHECKED BY | MWZ SHEET SIZE: 34 X 44 |
| DRAWING NO. 18 | S 1 32 (DISCIPLINE SHEET TYPE SEQUENCE) |

SHEET 000 OF 000

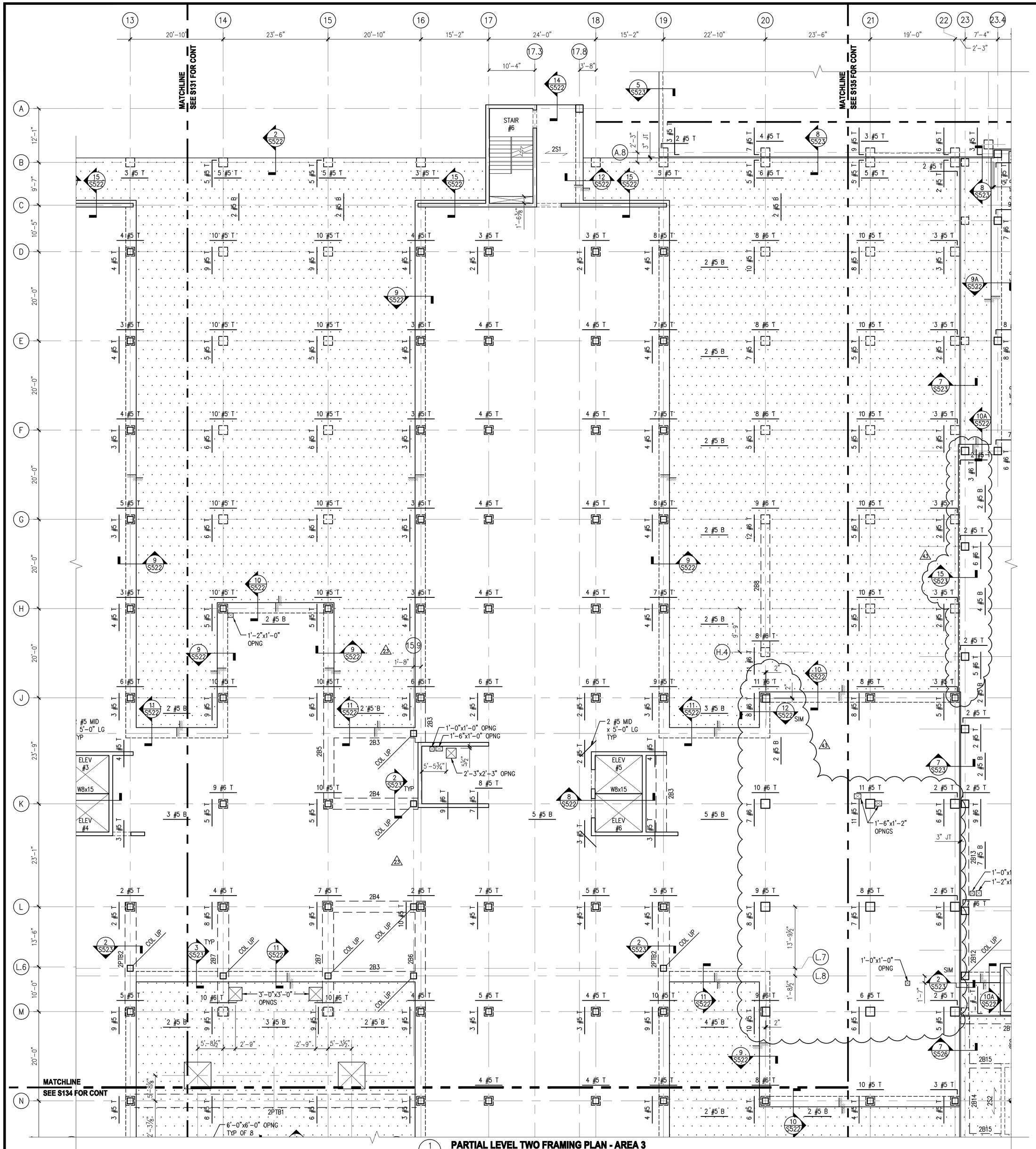


1 S133 **PARTIAL LEVEL TWO FRAMING PLAN - AREA 3**
1/8" = 1'-0"

PLAN NOTES:

1. T/SLAB EL. 51'-0", UNO. T/ROOF SLAB EL. 50'-0", UNO.
2. TYPICAL FLOOR CONSTRUCTION CONSISTS OF 11" THICK TWO-WAY REINFORCED CONCRETE FLAT SLAB, UNO.
3. SEE SPECIFICATION AND ARCH DRAWINGS FOR SLAB FINISH REQUIREMENTS.
4. SLAB REINFORCEMENT:
   - PROVIDE BOTTOM MAT OF CONTINUOUS REINFORCMENT CONSISTING OF #5 @ 12" B EACH WAY. ADDITIONAL BOTTOM BARS (IF ANY) ARE INDICATED ON THE PLAN.
   - PROVIDE TOP MAT OF CONTINUOUS REINFORCEMENT CONSISTING #5 @ 12" T EACH WAY. ADDITIONAL TOP BARS (IF ANY) ARE INDICATED ON THE PLAN.
5. SLAB REINF IN EAST-WEST DIRECTION (PARALLEL TO GRIDLINES A THROUGH W.4) SHALL BE OUTERMOST LAYERS OF TOP AND BOTTOM BARS. SLAB REINF IN NORTH-SOUTH DIRECTION (PARALLEL TO GRIDLINES 1 THROUGH 39) SHALL BE INNERMOST LAYERS OF TOP AND BOTTOM BARS.
6. CENTER ALL BEAMS ON GRIDLINES, UNO.
7. PROVIDE EPOXY COATED BARS AT NORTH MECHANICAL ROOM #3 EXTERIOR CONCRETE BEAMS (SEE S136).
8. COORDINATE SIZE AND LOCATION OF ALL OPENINGS, SLEEVES, FLOOR DEPRESSIONS, DRAINS, DOOR OPENINGS, CURBS, PADS, LEDGES, EMBEDS, INSERTS, ETC WITH ARCH, CIVIL & MEP DRAWINGS.
9. SEE S521 FOR SLAB TYPICAL DETAILS.
10. SEE S531 FOR BEAM TYPICAL DETAILS.
11. SEE S541 FOR STAIR TYPICAL DETAILS.
12. SEE S561 FOR POST-TENSIONED BEAM TYPICAL DETAILS.
13. SEE S611 FOR ONE-WAY SLAB, BEAM AND POST-TENSIONED BEAM SCHEDULES.
14. SEE S601 TO S608 FOR COLUMN SCHEDULE.
15. DENOTES ROOF AREA.
16. INFORMATION CONTAINED ON THIS DRAWING IS BOUND BY THE MATCHLINE. FOR INFORMATION BEYOND THE MATCHLINE, SEE ADJACENT AREA.

GENERAL SERVICES ADMINISTRATION
77 FORSYTH STREET
SUITE 600
ATLANTA, GA 30303
TEL: (404)331-3200

JACOBS
PROJECT MANAGEMENT CONSULTANT TO THE GENERAL SERVICES ADMINISTRATION

YATES CONSTRUCTION

SFCS Architecture Engineering Planning Interiors

URS CORPORATION
2020 K ST, NW
SUITE 300
WASHINGTON D.C. 20006

ISSUED FOR CONSTRUCTION

CERTIFICATIONS

DISTRICT OF COLUMBIA — MARK W. ZIMPELMAN — 8572 — REGISTERED PROFESSIONAL ENGINEER — 09/24/08

KEY PLAN

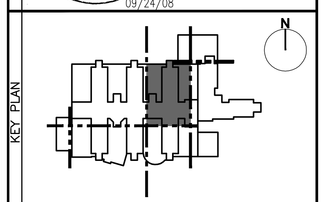


REVISION NOTES

| MARK | DATE | DESCRIPTION |
|---|---|---|
| 18 | 05/09/08 | LEVEL 2 SLAB - PENETRATIONS |
| | 05/09/08 | ISSUED FOR CONSTRUCTION |
| 22 | 06/10/08 | REVISE OPENINGS & COLUMN SIZE |
| 23 | 09/08/08 | RE-ISSUED FOR CONSTRUCTION |
| 43 | 09/24/08 | REVISION TO LEVEL 3 CONNECTOR |

GRAPHIC SCALE

CONTRACTORS

| | |
|---|---|
| A/E CON. NO. | GS-04P-07-EX-C-0099 |
| A/E TASK NO. | |
| CONS. CONTR. | |
| CONS. WORK | |
| PRIME A/E | |
| SUB A/E | |
| CONSTR. CON. | |

BUILDING

| | |
|---|---|
| NAME | ARMED FORCES RETIREMENT HOME |
| STREET | 1800 BEACH DRIVE |
| CITY/ST./ZIP | GULFPORT, MS 39507 |
| BUILDING NO. | |
| OTHER BUILDING NOs. | |
| FACILITY CODE | |

PROJECT

| | |
|---|---|
| PROJECT TITLE | ARMED FORCES RETIREMENT HOME GULFPORT, MISSISSIPPI |
| PROJECT DESCRIPTION | NEW CONSTRUCTION |
| PROJECT NO. | 31942982 |
| GSA PM | STEVEN SMITH |
| SUBMISSION | ISSUED FOR CONSTRUCTION |
| SUB. DATE | 09/08/2008 |

DRAWING

| | |
|---|---|
| DRAWING TITLE | PARTIAL LEVEL 2 FRAMING PLAN - AREA 3 |
| FILE NAME | S-133-N0095730.DWG |
| FLOOR NO. | LEVEL 2 |
| DRAWN BY | JVS DATE DRAFTED: |
| CHECKED BY | MWZ SHEET SIZE: 34 X 44 |
| DRAWING NO. | 18 S 1 33 (DISCIPLINE SHEET TYPE SEQUENCE) |
| SHEET | 000 OF 000 |

PROPERTY OF THE UNITED STATES GOVERNMENT - FOR OFFICIAL USE ONLY. Do not remove this notice. Properly destroy documents when no longer needed.

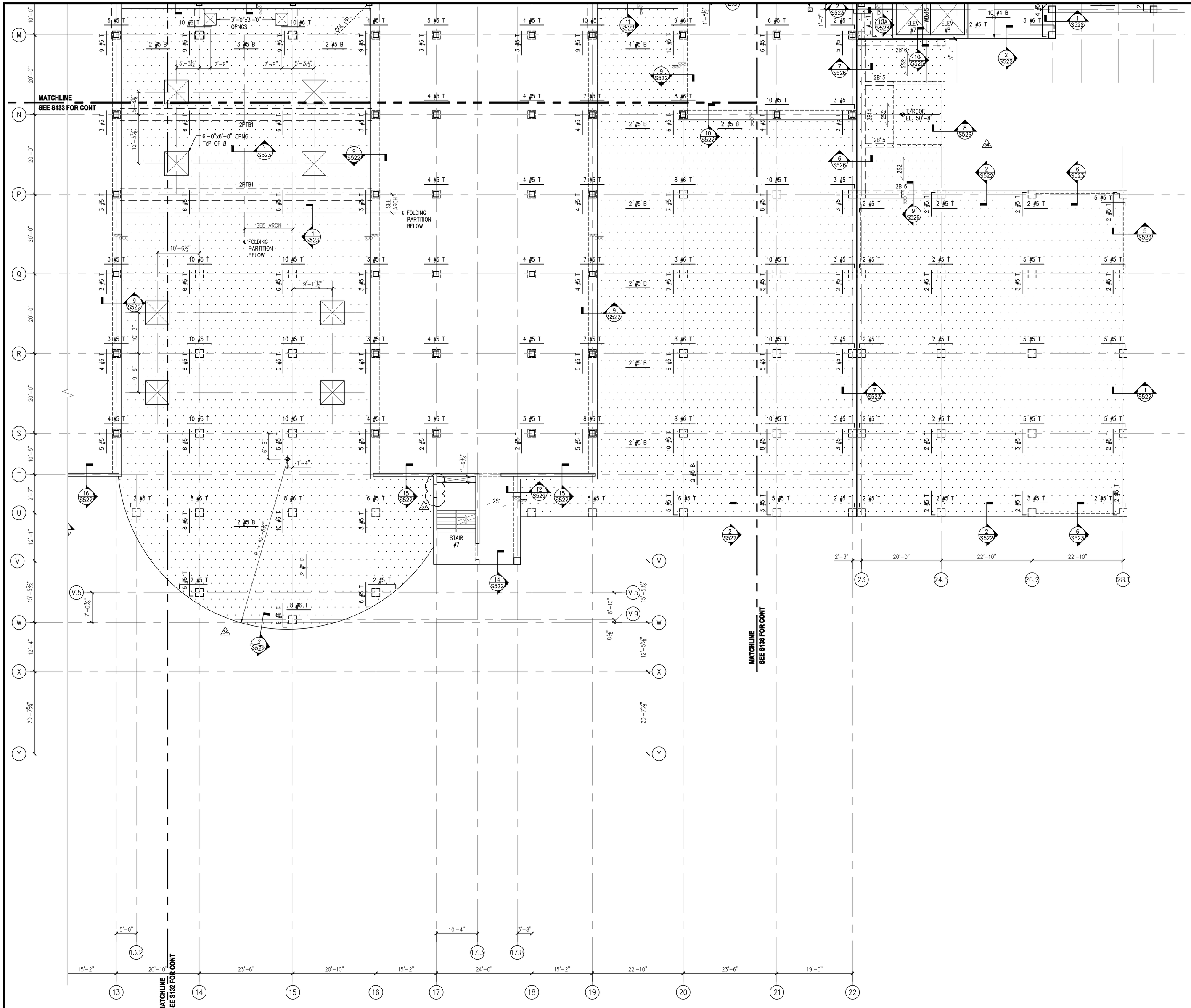


1 S134 **PARTIAL LEVEL TWO FRAMING PLAN - AREA 4**

1/8" = 1'-0"

SEE S133 FOR PLAN NOTES.

PROPERTY OF THE UNITED STATES GOVERNMENT – FOR OFFICIAL USE ONLY. Do not remove this notice. Properly destroy documents when no longer needed.

GSA
GENERAL SERVICES ADMINISTRATION
77 FORSYTH STREET
SUITE 600
ATLANTA, GA 30303
TEL: (404)331-3200

AFRH The Premier Retirement Community for America's Veterans

JACOBS
PROJECT MANAGEMENT CONSULTANT TO THE GENERAL SERVICES ADMINISTRATION

YATES CONSTRUCTION

SFCS Architecture Engineering Planning Interiors

URS
URS CORPORATION
2020 K ST, NW
SUITE 300
WASHINGTON D.C. 20006

ISSUED FOR CONSTRUCTION

CERTIFICATIONS

DISTRICT OF COLUMBIA
MARK W. ZIMPELMAN
8572
REGISTERED PROFESSIONAL ENGINEER
09/08/08

KEY PLAN

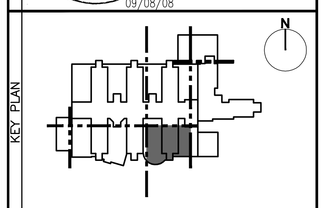

REVISION NOTES

| MARK | DATE | DESCRIPTION |
|---|---|---|
| 18 | 05/09/08 | LEVEL 2 SLAB – PENETRATIONS |
| | 05/09/08 | ISSUED FOR CONSTRUCTION |
| 34 | 08/18/08 | REVISED ENTRY & LOADING DOCK |
| 37 | 09/08/08 | RE-ISSUED FOR CONSTRUCTION |

GRAPHIC SCALE

CONTRACTORS

| | |
|---|---|
| A/E CON. NO. | GS-04P-07-EX-C-0099 |
| A/E TASK NO. | |
| CONS. CONTR. | |
| CONS. WORK | |
| PRIME A/E | |
| SUB A/E | |
| CONSTR. CON. | |

BUILDING

| | |
|---|---|
| NAME | ARMED FORCES RETIREMENT HOME |
| STREET | 1800 BEACH DRIVE |
| CITY/ST./ZIP | GULFPORT, MS 39507 |
| BUILDING NO. | |
| OTHER | |
| BUILDING NOs. | |
| FACILITY CODE | |

PROJECT

| | |
|---|---|
| PROJECT TITLE | ARMED FORCES RETIREMENT HOME GULFPORT, MISSISSIPPI |
| PROJECT DESCRIPTION | NEW CONSTRUCTION |
| PROJECT NO. | 31942982 |
| GSA PM | STEVEN SMITH |
| SUBMISSION | ISSUED FOR CONSTRUCTION |
| SUB. DATE | 09/08/2008 |

DRAWING

| | |
|---|---|
| DRAWING TITLE | PARTIAL LEVEL 2 FRAMING PLAN – AREA 4 |
| FILE NAME | S-134-N0095730.DWG |
| FLOOR NO. | LEVEL 2 |
| DRAWN BY | JVS DATE DRAFTED: |
| CHECKED BY | MWZ SHEET SIZE: 34 X 44 |
| DRAWING NO. 18 | S 1 34 (DISCIPLINE SHEET TYPE SEQUENCE) |

SHEET 000 OF 000

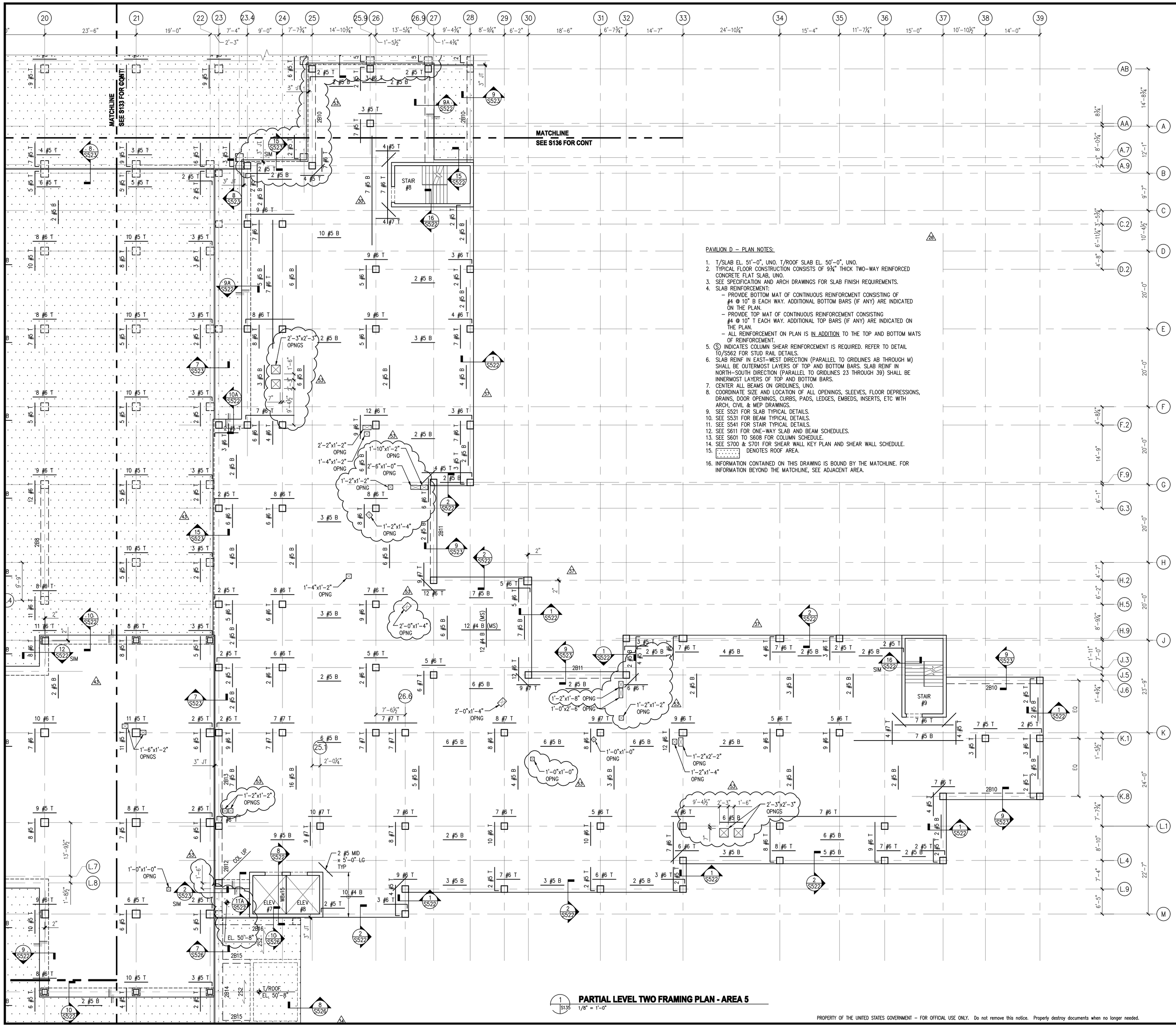


1 S135 **PARTIAL LEVEL TWO FRAMING PLAN - AREA 5**
1/8" = 1'-0"

PAVILION D – PLAN NOTES:

1. T/SLAB EL. 51'-0", UNO. T/ROOF SLAB EL. 50'-0", UNO.
2. TYPICAL FLOOR CONSTRUCTION CONSISTS OF 9¾" THICK TWO-WAY REINFORCED CONCRETE FLAT SLAB, UNO.
3. SEE SPECIFICATION AND ARCH DRAWINGS FOR SLAB FINISH REQUIREMENTS.
4. SLAB REINFORCEMENT:
   - PROVIDE BOTTOM MAT OF CONTINUOUS REINFORCMENT CONSISTING OF #4 @ 10" B EACH WAY. ADDITIONAL BOTTOM BARS (IF ANY) ARE INDICATED ON THE PLAN.
   - PROVIDE TOP MAT OF CONTINUOUS REINFORCEMENT CONSISTING #4 @ 10" T EACH WAY. ADDITIONAL TOP BARS (IF ANY) ARE INDICATED ON THE PLAN.
   - ALL REINFORCEMENT ON PLAN IS IN ADDITION TO THE TOP AND BOTTOM MATS OF REINFORCEMENT.
5. (S) INDICATES COLUMN SHEAR REINFORCEMENT IS REQUIRED. REFER TO DETAIL 10/S562 FOR STUD RAIL DETAILS.
6. SLAB REINF IN EAST-WEST DIRECTION (PARALLEL TO GRIDLINES AB THROUGH M) SHALL BE OUTERMOST LAYERS OF TOP AND BOTTOM BARS. SLAB REINF IN NORTH-SOUTH DIRECTION (PARALLEL TO GRIDLINES 23 THROUGH 39) SHALL BE INNERMOST LAYERS OF TOP AND BOTTOM BARS.
7. CENTER ALL BEAMS ON GRIDLINES, UNO.
8. COORDINATE SIZE AND LOCATION OF ALL OPENINGS, SLEEVES, FLOOR DEPRESSIONS, DRAINS, DOOR OPENINGS, CURBS, PADS, LEDGES, EMBEDS, INSERTS, ETC WITH ARCH, CIVIL & MEP DRAWINGS.
9. SEE S521 FOR SLAB TYPICAL DETAILS.
10. SEE S531 FOR BEAM TYPICAL DETAILS.
11. SEE S541 FOR STAIR TYPICAL DETAILS.
12. SEE S611 FOR ONE-WAY SLAB AND BEAM SCHEDULES.
13. SEE S601 TO S608 FOR COLUMN SCHEDULE.
14. SEE S700 & S701 FOR SHEAR WALL KEY PLAN AND SHEAR WALL SCHEDULE.
15. DENOTES ROOF AREA.
16. INFORMATION CONTAINED ON THIS DRAWING IS BOUND BY THE MATCHLINE. FOR INFORMATION BEYOND THE MATCHLINE, SEE ADJACENT AREA.

PROPERTY OF THE UNITED STATES GOVERNMENT – FOR OFFICIAL USE ONLY. Do not remove this notice. Properly destroy documents when no longer needed.

GENERAL SERVICES ADMINISTRATION
77 FORSYTH STREET
SUITE 600
ATLANTA, GA 30303
TEL: (404)331-3200

AFRH The Premier Retirement Community for America's Veterans
JACOBS
PROJECT MANAGEMENT CONSULTANT TO THE GENERAL SERVICES ADMINISTRATION
YATES CONSTRUCTION
SFCS Architecture Engineering Planning Interiors
URS CORPORATION
2020 K ST, NW
SUITE 300
WASHINGTON D.C. 20006

ISSUED FOR CONSTRUCTION

CERTIFICATIONS: DISTRICT OF COLUMBIA — MARK W. ZIMPELMAN — 8572 — REGISTERED PROFESSIONAL ENGINEER — 10/31/08

KEY PLAN

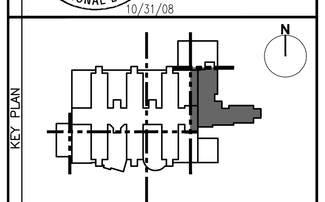

REVISION NOTES

| MARK | DATE | DESCRIPTION |
|---|---|---|
| 18 | 05/09/08 | LEVEL 2 SLAB – PENETRATIONS |
| | 05/09/08 | ISSUED FOR CONSTRUCTION |
| 20 | 06/20/08 | PENTHOUSE, PH ROOF & PAV D SLABS |
| 21 | 07/21/08 | REVISED POUR STRIP LOCATION |
| 22 | 09/08/08 | RE-ISSUED FOR CONSTRUCTION |
| 23 | 09/24/08 | REVISION TO LEVEL 3 CONNECTOR |
| 24 | 10/31/08 | REVISE SLAB OPENINGS |

GRAPHIC SCALE

CONTRACTORS

| | |
|---|---|
| A/E CON. NO. | GS-04P-07-EX-C-0099 |
| A/E TASK NO. | |
| CONS. CONTR. | |
| CONS. WORK | |
| PRIME A/E | |
| SUB A/E | |
| CONSTR. CON. | |

BUILDING

| | |
|---|---|
| NAME | ARMED FORCES RETIREMENT HOME |
| STREET | 1800 BEACH DRIVE |
| CITY/ST./ZIP | GULFPORT, MS 39507 |
| BUILDING NO. | |
| OTHER BUILDING NOs. | |
| FACILITY CODE | |

PROJECT

| | |
|---|---|
| PROJECT TITLE | ARMED FORCES RETIREMENT HOME GULFPORT, MISSISSIPPI |
| PROJECT DESCRIPTION | NEW CONSTRUCTION |
| PROJECT NO. | 31942982 |
| GSA PM | STEVEN SMITH |
| SUBMISSION | ISSUED FOR CONSTRUCTION |
| SUB. DATE | 09/08/2008 |

DRAWING

| | |
|---|---|
| DRAWING TITLE | PARTIAL LEVEL 2 FRAMING PLAN – AREA 5 |
| FILE NAME | S-135-N0095730.DWG |
| FLOOR NO. | LEVEL 2 |
| DRAWN BY | JVS DATE DRAFTED: |
| CHECKED BY | MWZ SHEET SIZE: 34 X 44 |
| DRAWING NO. | 18 S 1 35 (DISCIPLINE SHEET TYPE SEQUENCE) |
| | SHEET 000 OF 000 |

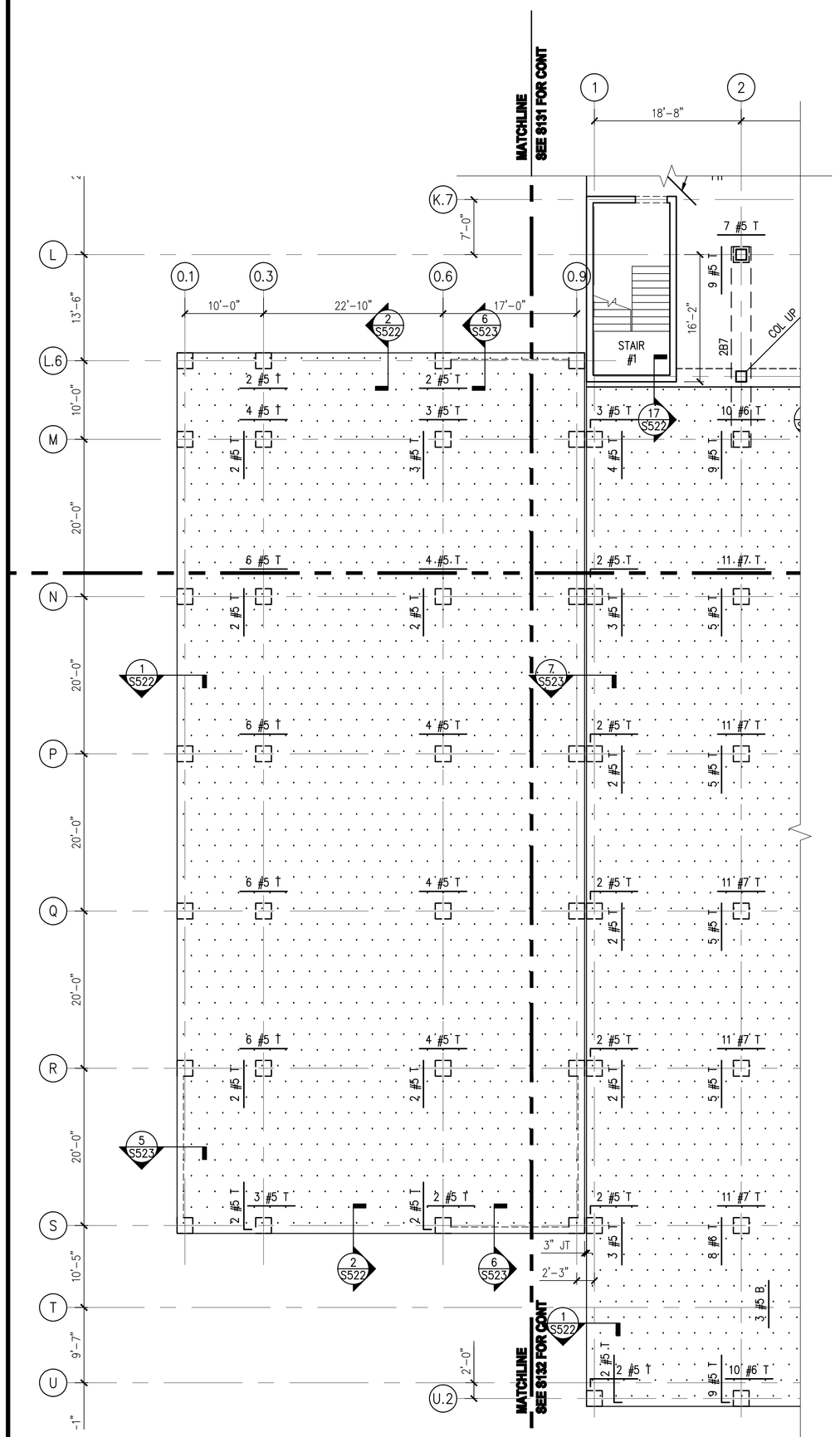


1 S136 **PARTIAL LEVEL TWO/ROOF FRAMING PLAN - MECH ROOM #1**
1/8" = 1'-0"
SEE S133 FOR PLAN NOTES.

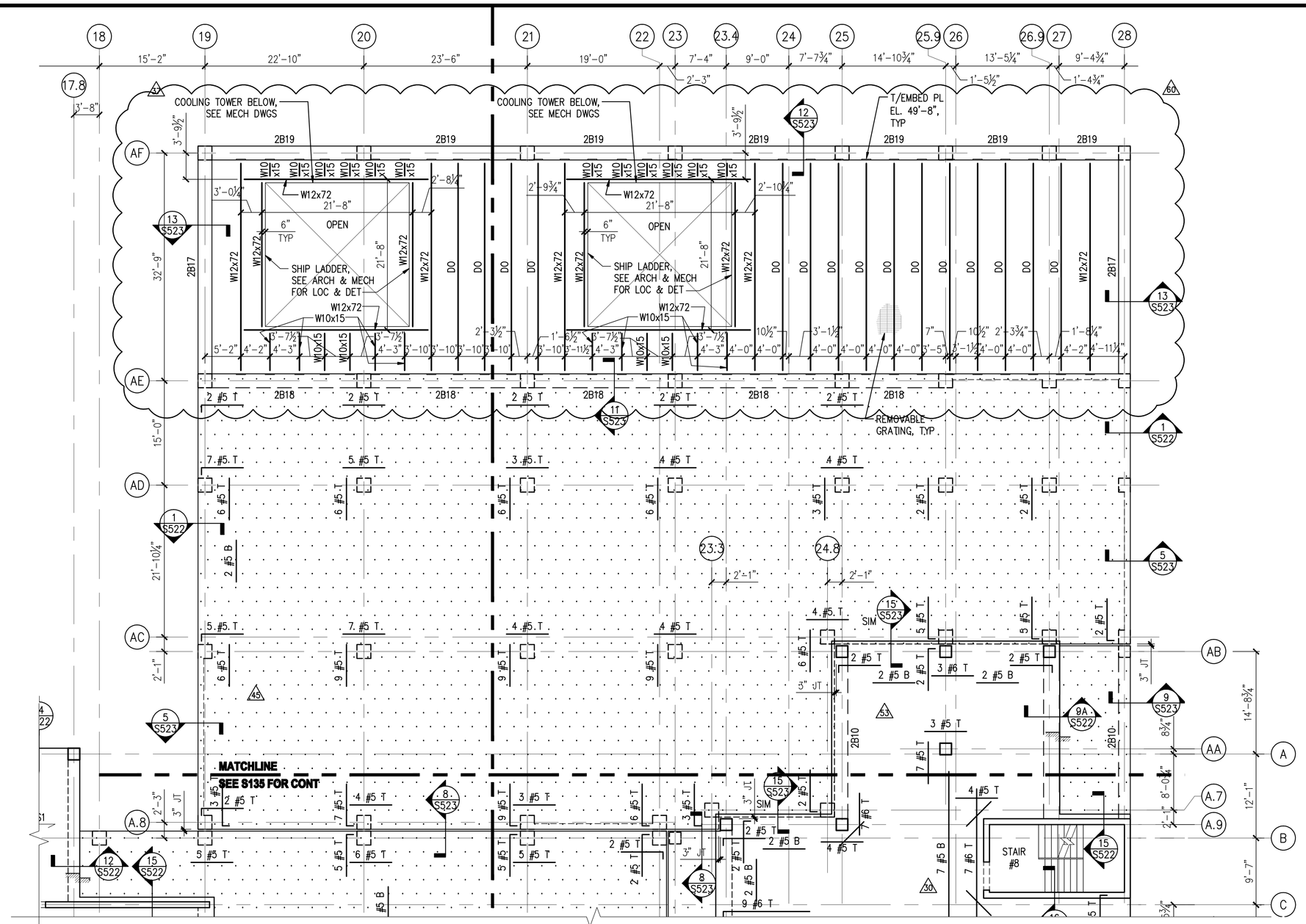


3 S136 **PARTIAL LEVEL TWO/ROOF FRAMING PLAN - MECH ROOM #3**
1/8" = 1'-0"
SEE S133 FOR PLAN NOTES.

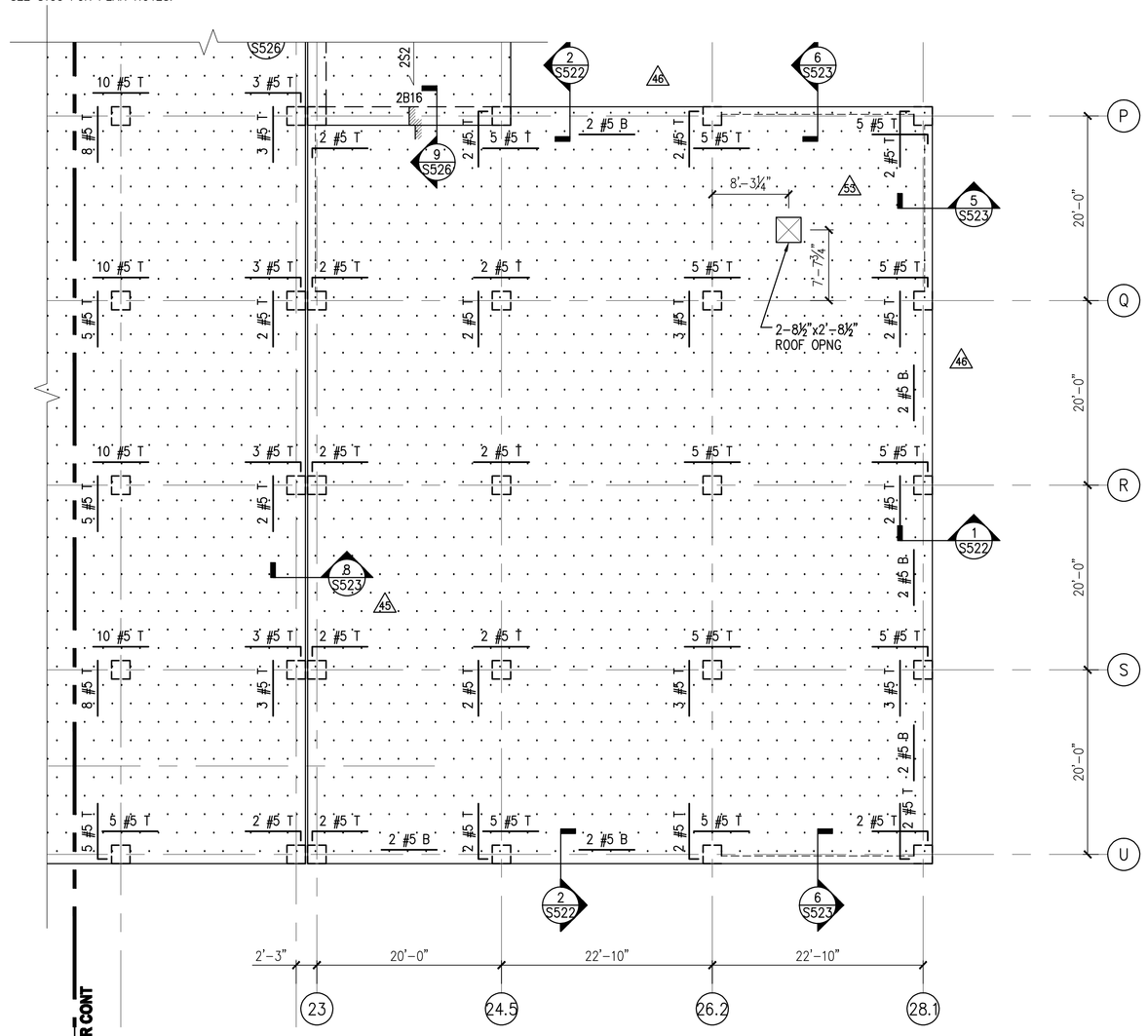


2 S136 **PARTIAL LEVEL TWO/ROOF FRAMING PLAN - MECH ROOM #2**
1/8" = 1'-0"
SEE S133 FOR PLAN NOTES. REFER TO 4/S521 FOR TYPICAL OPENING IN CONCRETE SLAB DETAIL. 53

PROPERTY OF THE UNITED STATES GOVERNMENT – FOR OFFICIAL USE ONLY. Do not remove this notice. Properly destroy documents when no longer needed.


GSA
GENERAL SERVICES ADMINISTRATION
77 FORSYTH STREET
SUITE 600
ATLANTA, GA 30303
TEL: (404)331-3200

AFRH The Premier Retirement Community for America's Veterans
JACOBS
PROJECT MANAGEMENT CONSULTANT TO THE GENERAL SERVICES ADMINISTRATION

YATES CONSTRUCTION

SFCS Architecture Engineering Planning Interiors

URS
URS CORPORATION
2020 K ST, NW
SUITE 300
WASHINGTON D.C. 20006


ISSUED FOR CONSTRUCTION

CERTIFICATIONS

DISTRICT OF COLUMBIA
MARK W. ZIMPELMAN
8572
REGISTERED PROFESSIONAL ENGINEER
12/02/08

KEY PLAN

REVISION NOTES

| MARK | DATE | DESCRIPTION |
|---|---|---|
| 18 | 05/09/08 | LEVEL 2 SLAB – PENETRATIONS |
| | 05/09/08 | ISSUED FOR CONSTRUCTION |
| 37 | 09/08/08 | RE-ISSUED FOR CONSTRUCTION |
| 45 | 09/25/08 | ADD SLOPES AT MECH RM #3 |
| 46 | 10/01/08 | REVISE REINF AT MECH RMS |
| 53 | 10/31/08 | REVISE SLAB OPENINGS |
| 60 | 12/02/08 | CIVIL, STRUCT, ARCH REV |

GRAPHIC SCALE

CONTRACTORS

| | |
|---|---|
| A/E CON. NO. | GS-04P-07-EX-C-0099 |
| A/E TASK NO. | |
| CONS. CONTR. | |
| CONS. WORK | |
| PRIME A/E | |
| SUB A/E | |
| CONSTR. CON. | |

BUILDING

| | |
|---|---|
| NAME | ARMED FORCES RETIREMENT HOME |
| STREET | 1800 BEACH DRIVE |
| CITY/ST./ZIP | GULFPORT, MS 39507 |
| BUILDING NO. | |
| OTHER BUILDING NOs. | |
| FACILITY CODE | |

PROJECT

| | |
|---|---|
| PROJECT TITLE | ARMED FORCES RETIREMENT HOME GULFPORT, MISSISSIPPI |
| PROJECT DESCRIPTION | NEW CONSTRUCTION |
| PROJECT NO. | 31942982 |
| GSA PM | STEVEN SMITH |
| SUBMISSION | ISSUED FOR CONSTRUCTION |
| SUB. DATE | 09/08/2008 |

DRAWING

| | |
|---|---|
| DRAWING TITLE | PARTIAL LVL 2/ROOF FRAMING PLAN – MECH RMS |
| FILE NAME | S-136-N0095730.DWG |
| FLOOR NO. | LEVEL 2 |
| DRAWN BY | JVS DATE DRAFTED: |
| CHECKED BY | MWZ SHEET SIZE: 34 X 44 |
| DRAWING NO. 18 | S 1 36 |
| | DISCIPLINE SHEET TYPE SEQUENCE |
| | SHEET 000 OF 000 |

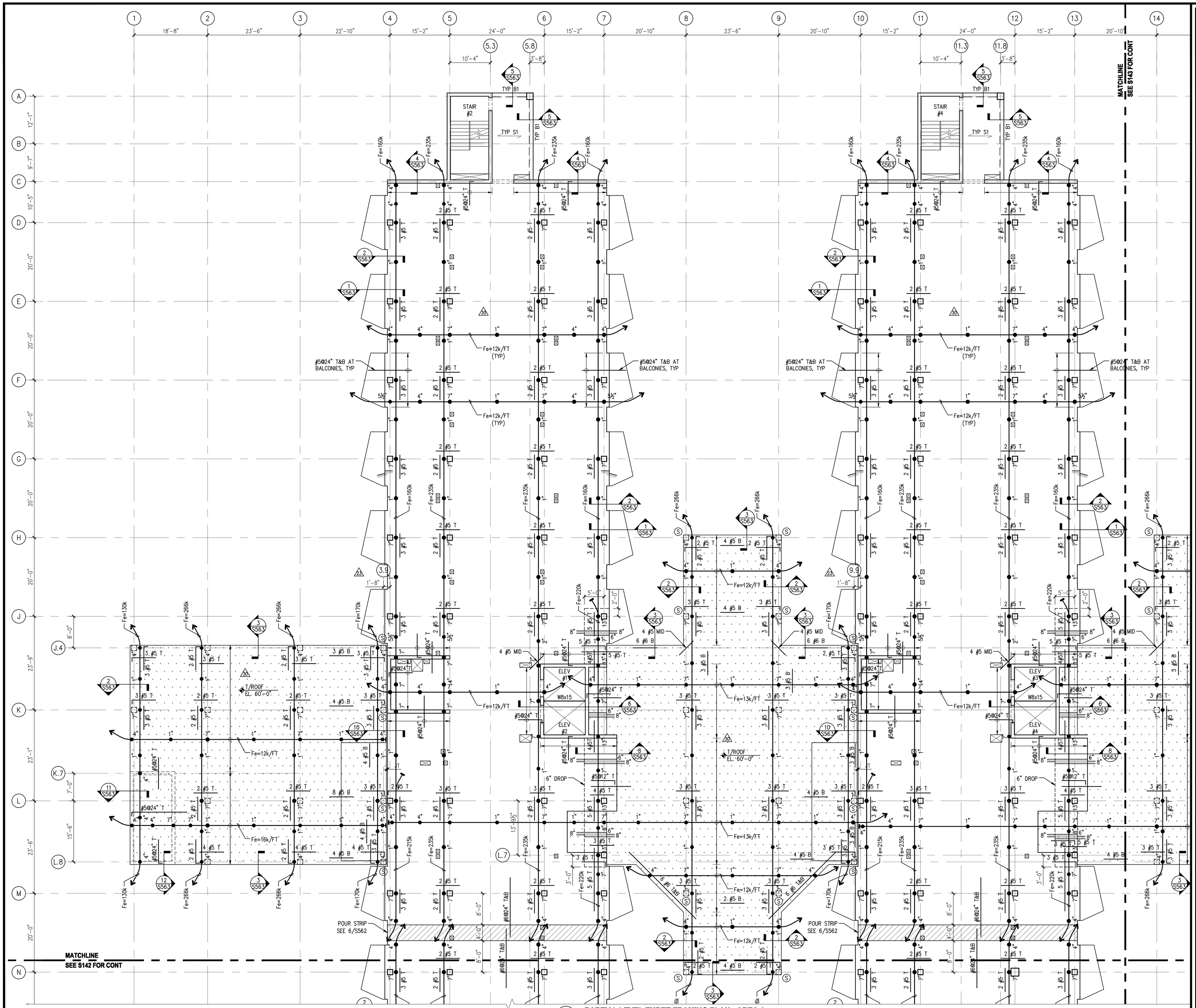


1 S141 **PARTIAL LEVEL THREE FRAMING PLAN - AREA 1**

1/8" = 1'-0"

SEE S143 FOR PLAN NOTES.

PROPERTY OF THE UNITED STATES GOVERNMENT – FOR OFFICIAL USE ONLY. Do not remove this notice. Properly destroy documents when no longer needed.

GSA
GENERAL SERVICES ADMINISTRATION
77 FORSYTH STREET
SUITE 600
ATLANTA, GA 30303
TEL: (404)331-3200

AFRH The Premier Retirement Community for America's Veterans

JACOBS
PROJECT MANAGEMENT CONSULTANT TO THE GENERAL SERVICES ADMINISTRATION

YATES CONSTRUCTION

SFCS Architecture Engineering Planning Interiors

URS
URS CORPORATION
2020 K ST, NW
SUITE 300
WASHINGTON D.C. 20006

ISSUED FOR CONSTRUCTION

CERTIFICATIONS

DISTRICT OF COLUMBIA
MARK W. ZIMPFRAMAN
8572
REGISTERED PROFESSIONAL ENGINEER
09/08/08

KEY PLAN

| REVISION NOTES | | |
|---|---|---|
| MARK | DATE | DESCRIPTION |
| 20 | 06/02/08 | LEVEL 3 SLAB & PENETRATIONS |
| 21 | 06/02/08 | ISSUED FOR CONSTRUCTION |
| 22 | 06/10/08 | REVISE OPENINGS & COLUMN SIZE |
| 23 | 07/21/08 | REVISED POUR STRIP LOCATION |
| 24 | 09/08/08 | RE-ISSUED FOR CONSTRUCTION |

GRAPHIC SCALE

| CONTRACTORS | |
|---|---|
| A/E CON. NO. | GS-04P-07-EX-C-0099 |
| A/E TASK NO. | |
| CONS. CONTR. | |
| CONS. WORK | |
| PRIME A/E | |
| SUB A/E | |
| CONSTR. CON. | |

| BUILDING | |
|---|---|
| NAME | ARMED FORCES RETIREMENT HOME |
| STREET | 1800 BEACH DRIVE |
| CITY/ST./ZIP | GULFPORT, MS 39507 |
| BUILDING NO. | |
| OTHER BUILDING NOs. | |
| FACILITY CODE | |

| PROJECT | |
|---|---|
| PROJECT TITLE | ARMED FORCES RETIREMENT HOME GULFPORT, MISSISSIPPI |
| PROJECT DESCRIPTION | NEW CONSTRUCTION |
| PROJECT NO. | 31942982 |
| GSA PM | STEVEN SMITH |
| SUBMISSION | ISSUED FOR CONSTRUCTION |
| SUB. DATE | 09/08/2008 |

| DRAWING | |
|---|---|
| DRAWING TITLE | PARTIAL LEVEL 3 FRAMING PLAN – AREA 1 |
| FILE NAME | S-141-N0095730.DWG |
| FLOOR NO. | LEVEL 3 |
| DRAWN BY | JVS DATE DRAFTED: |
| CHECKED BY | MWZ SHEET SIZE: 34 X 44 |
| DRAWING NO. | 20 S 1 41 |
| | DISCIPLINE SHEET TYPE SEQUENCE |
| | SHEET 000 OF 000 |

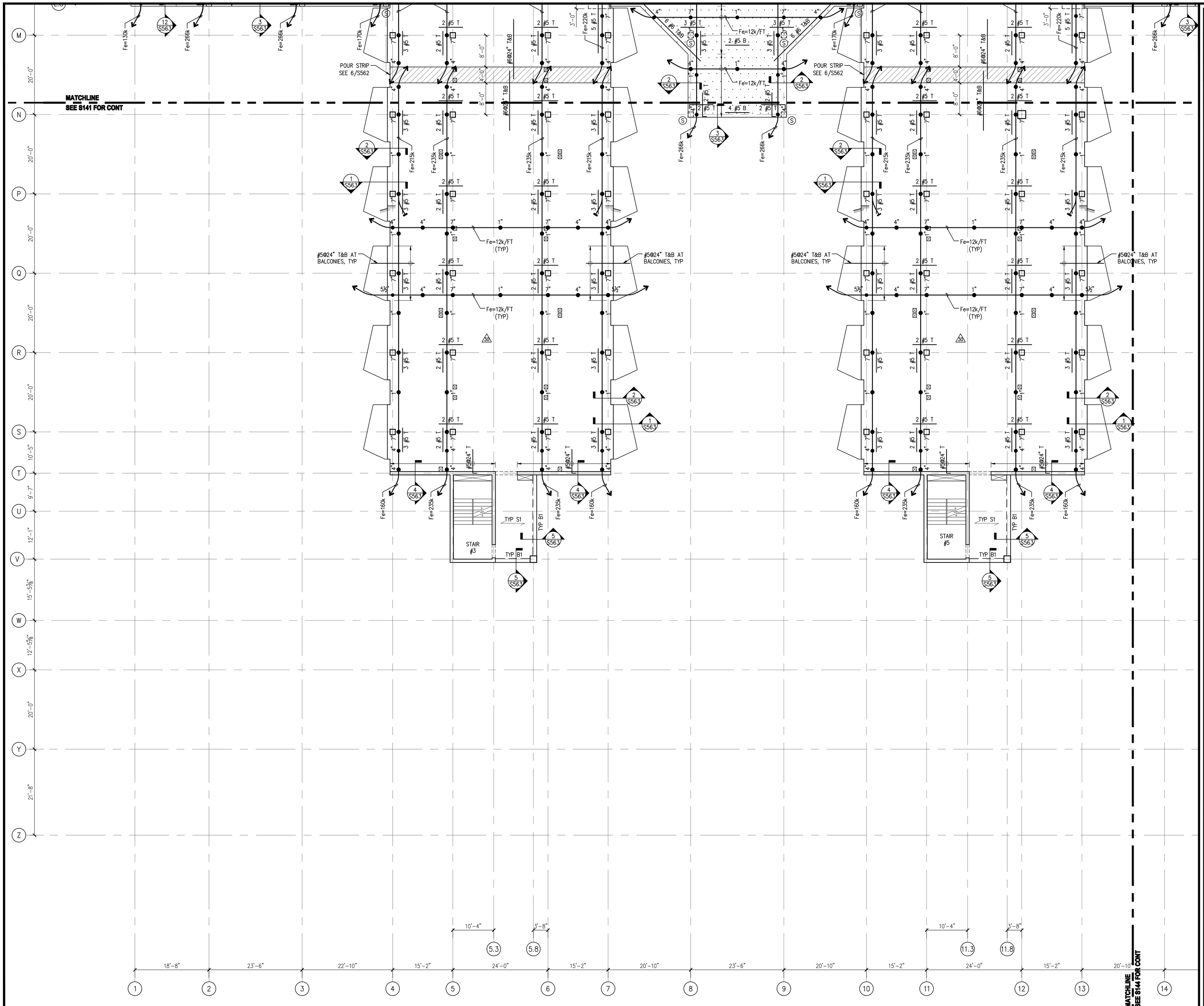


1 S142 **PARTIAL LEVEL THREE FRAMING PLAN - AREA 2**

1/8" = 1'-0"

SEE S143 FOR PLAN NOTES.

PROPERTY OF THE UNITED STATES GOVERNMENT – FOR OFFICIAL USE ONLY. Do not remove this notice. Properly destroy documents when no longer needed.

GENERAL SERVICES ADMINISTRATION
77 FORSYTH STREET
SUITE 600
ATLANTA, GA 30303
TEL: (404)331-3200

JACOBS
PROJECT MANAGEMENT CONSULTANT TO THE GENERAL SERVICES ADMINISTRATION

YATES CONSTRUCTION

SFCS Architecture Engineering Planning Interiors

URS CORPORATION
2020 K ST, NW
SUITE 300
WASHINGTON D.C. 20006

ISSUED FOR CONSTRUCTION

CERTIFICATIONS

DISTRICT OF COLUMBIA
MARK W. ZIMPELMAN
8572
REGISTERED PROFESSIONAL ENGINEER
09/08/08

KEY PLAN

REVISION NOTES

| MARK | DATE | DESCRIPTION |
|---|---|---|
| 3 | 06/02/08 | LEVEL 3 SLAB & PENETRATIONS |
| | 06/02/08 | ISSUED FOR CONSTRUCTION |
| 2 | 07/21/08 | REVISED POUR STRIP LOCATION |
| 1 | 09/08/08 | RE-ISSUED FOR CONSTRUCTION |

GRAPHIC SCALE

CONTRACTORS

| | |
|---|---|
| A/E CON. NO. | GS-04P-07-EX-C-0099 |
| A/E TASK NO. | |
| CONS. CONTR. | |
| CONS. WORK | |
| PRIME A/E | |
| SUB A/E | |
| CONSTR. CON. | |

BUILDING

| | |
|---|---|
| NAME | ARMED FORCES RETIREMENT HOME |
| STREET | 1800 BEACH DRIVE |
| CITY/ST./ZIP | GULFPORT, MS 39507 |
| BUILDING NO. | |
| OTHER BUILDING NOs. | |
| FACILITY CODE | |

PROJECT

| | |
|---|---|
| PROJECT TITLE | ARMED FORCES RETIREMENT HOME GULFPORT, MISSISSIPPI |
| PROJECT DESCRIPTION | NEW CONSTRUCTION |
| PROJECT NO. | 31942982 |
| GSA PM | STEVEN SMITH |
| SUBMISSION | ISSUED FOR CONSTRUCTION |
| SUB. DATE | 09/08/2008 |

DRAWING

| | |
|---|---|
| DRAWING TITLE | PARTIAL LEVEL 3 FRAMING PLAN – AREA 2 |
| FILE NAME | S-142-N0095730.DWG |
| FLOOR NO. | LEVEL 3 |
| DRAWN BY | JVS DATE DRAFTED: |
| CHECKED BY | MWZ SHEET SIZE: 34 X 44 |
| DRAWING NO. | 3 S 1 42 (DISCIPLINE SHEET TYPE SEQUENCE) |
| SHEET | 000 OF 000 |

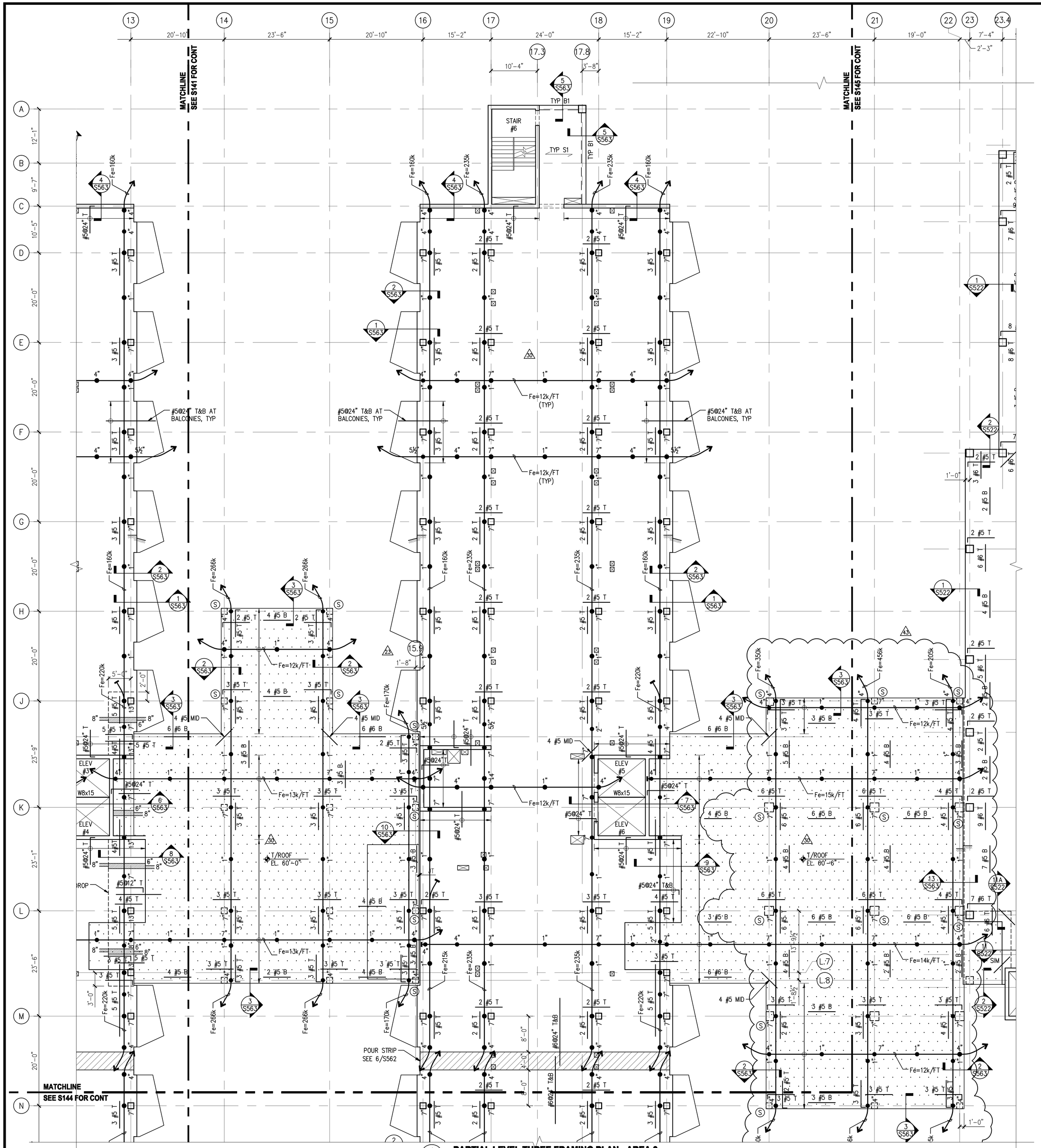


1 S143 **PARTIAL LEVEL THREE FRAMING PLAN - AREA 3**

1/8" = 1'-0"

PLAN NOTES:

1. T/SLAB EL. 60'-6", UNO. T/ROOF SLAB EL. SEE ARCH, UNO. T/SLAB EL. 61'-6" AT AREA D.
2. TYPICAL FLOOR CONSTRUCTION CONSISTS OF 8" THICK TWO-WAY POST-TENSIONED CONCRETE FLAT SLAB, UNO. PROVIDE 7¾" THICK SLAB AT BALCONY HP.
3. SEE SPECIFICATION AND ARCH DRAWINGS FOR SLAB FINISH REQUIREMENTS.
4. POST-TENSIONING:
   - MAXIMUM PERMISSIBLE TENDON PROFILE SHALL BE 1" TO CGS FROM TOP OF SLAB AT COLUMN LINES AND 1" TO CGS FROM BOTTOM OF SLAB AT MID-SPANS, UNO.
   - ALL TENDON CGS ELEVATIONS NOTED ARE FROM THE BOTTOM OF SLAB.
   - SEE PLAN FOR DIMENSIONS LOCATING PROFILE OF TENDONS.
   - PROVIDE ADEQUATE SUPPORT TO MAINTAIN DESIGN PROFILE AND HOLD TENDONS IN PLACE DURING CONCRETE PLACEMENT.
5. SLAB REINFORCEMENT:
   - ALL REINFORCEMENT ON PLAN IS IN ADDITION TO THE TOP AND BOTTOM MATS OF REINFORCEMENT.
   - PROVIDE BOTTOM MAT OF CONTINUOUS REINFORCEMENT CONSISTING OF #4 @ 24" EACH WAY. ADDITIONAL BOTTOM BARS (IF ANY) ARE INDICATED ON THE PLAN.
   - PROVIDE A TOP MAT OF CONTINUOUS REINFORCEMENT CONSISTING OF #4 @ 24" EACH WAY. ADDITIONAL TOP BARS ARE INDICATED ON THE PLAN.
6. (S) INDICATES COLUMN SHEAR REINFORCEMENT IS REQUIRED. REFER TO DETAIL 10/S562 FOR STUD RAIL DETAILS.
7. PROVIDE EPOXY COATED BARS AT BALCONIES.
8. PROVIDE ENCAPSULATED POST TENSION ANCHORAGE AT ALL BALCONIES.
9. CENTER ALL BEAMS ON GRIDLINES, UNO.
10. COORDINATE SIZE AND LOCATION OF ALL OPENINGS, SLEEVES, FLOOR DEPRESSIONS, DRAINS, DOOR OPENINGS, CURBS, PADS, LEDGES, EMBEDS, INSERTS, ETC WITH ARCH, CIVIL & MEP DRAWINGS.
11. SEE S562 FOR POST-TENSIONED TWO WAY SLAB DETAILS AND PLACING SEQUENCE OF TENDONS AND REBAR.
12. SEE S611 FOR NON-POST-TENSIONED BEAM SCHEDULE AND DETAILS.
13. SEE S601 TO S608 FOR COLUMN SCHEDULE AND DETAILS.
14. ⋯ DENOTES ROOF AREA.
15. INFORMATION CONTAINED ON THIS DRAWING IS BOUND BY THE MATCHLINE. FOR INFORMATION BEYOND THE MATCHLINE, SEE ADJACENT AREA.

PROPERTY OF THE UNITED STATES GOVERNMENT – FOR OFFICIAL USE ONLY. Do not remove this notice. Properly destroy documents when no longer needed.

GSA
GENERAL SERVICES ADMINISTRATION
77 FORSYTH STREET
SUITE 600
ATLANTA, GA 30303
TEL: (404)331-3200

AFRH The Premier Retirement Community for America's Veterans
JE JACOBS
PROJECT MANAGEMENT CONSULTANT TO THE GENERAL SERVICES ADMINISTRATION

YATES CONSTRUCTION

SFCS Architecture Engineering Planning Interiors

URS
URS CORPORATION
2020 K ST, NW
SUITE 300
WASHINGTON D.C. 20006

ISSUED FOR CONSTRUCTION

CERTIFICATIONS

DISTRICT OF COLUMBIA
MARK W. ZIMPELMAN
8572
REGISTERED PROFESSIONAL ENGINEER
09/24/08

KEY PLAN

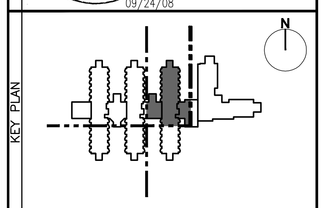


REVISION NOTES

| MARK | DATE | DESCRIPTION |
|---|---|---|
| 20 | 06/02/08 | LEVEL 3 SLAB & PENETRATIONS |
| | 06/02/08 | ISSUED FOR CONSTRUCTION |
| 22 | 06/10/08 | REVISE OPENINGS & COLUMN SIZE |
| 23 | 07/21/08 | REVISED POUR STRIP LOCATION |
| 24 | 09/08/08 | RE-ISSUED FOR CONSTRUCTION |
| 25 | 09/24/08 | REVISION TO LEVEL 3 CONNECTOR |

GRAPHIC SCALE

CONTRACTORS

| | |
|---|---|
| A/E CON. NO. | GS-04P-07-EX-C-0099 |
| A/E TASK NO. | |
| CONS. CONTR. | |
| CONS. WORK | |
| PRIME A/E | |
| SUB A/E | |
| CONSTR. CON. | |

BUILDING

| | |
|---|---|
| NAME | ARMED FORCES RETIREMENT HOME |
| STREET | 1800 BEACH DRIVE |
| CITY/ST./ZIP | GULFPORT, MS 39507 |
| BUILDING NO. | |
| OTHER BUILDING NOs. | |
| FACILITY CODE | |

PROJECT

| | |
|---|---|
| PROJECT TITLE | ARMED FORCES RETIREMENT HOME GULFPORT, MISSISSIPPI |
| PROJECT DESCRIPTION | NEW CONSTRUCTION |
| PROJECT NO. | 31942982 |
| GSA PM | STEVEN SMITH |
| SUBMISSION | ISSUED FOR CONSTRUCTION |
| SUB. DATE | 09/08/2008 |

DRAWING

| | |
|---|---|
| DRAWING TITLE | PARTIAL LEVEL 3 FRAMING PLAN – AREA 3 |
| FILE NAME | S-143-N0095730.DWG |
| FLOOR NO. | LEVEL 3 |
| DRAWN BY | JVS DATE DRAFTED: |
| CHECKED BY | MWZ SHEET SIZE: 34 X 44 |
| DRAWING NO. | 20 S 1 43 |
| | DISCIPLINE SHEET TYPE SEQUENCE |
| | SHEET 000 OF 000 |

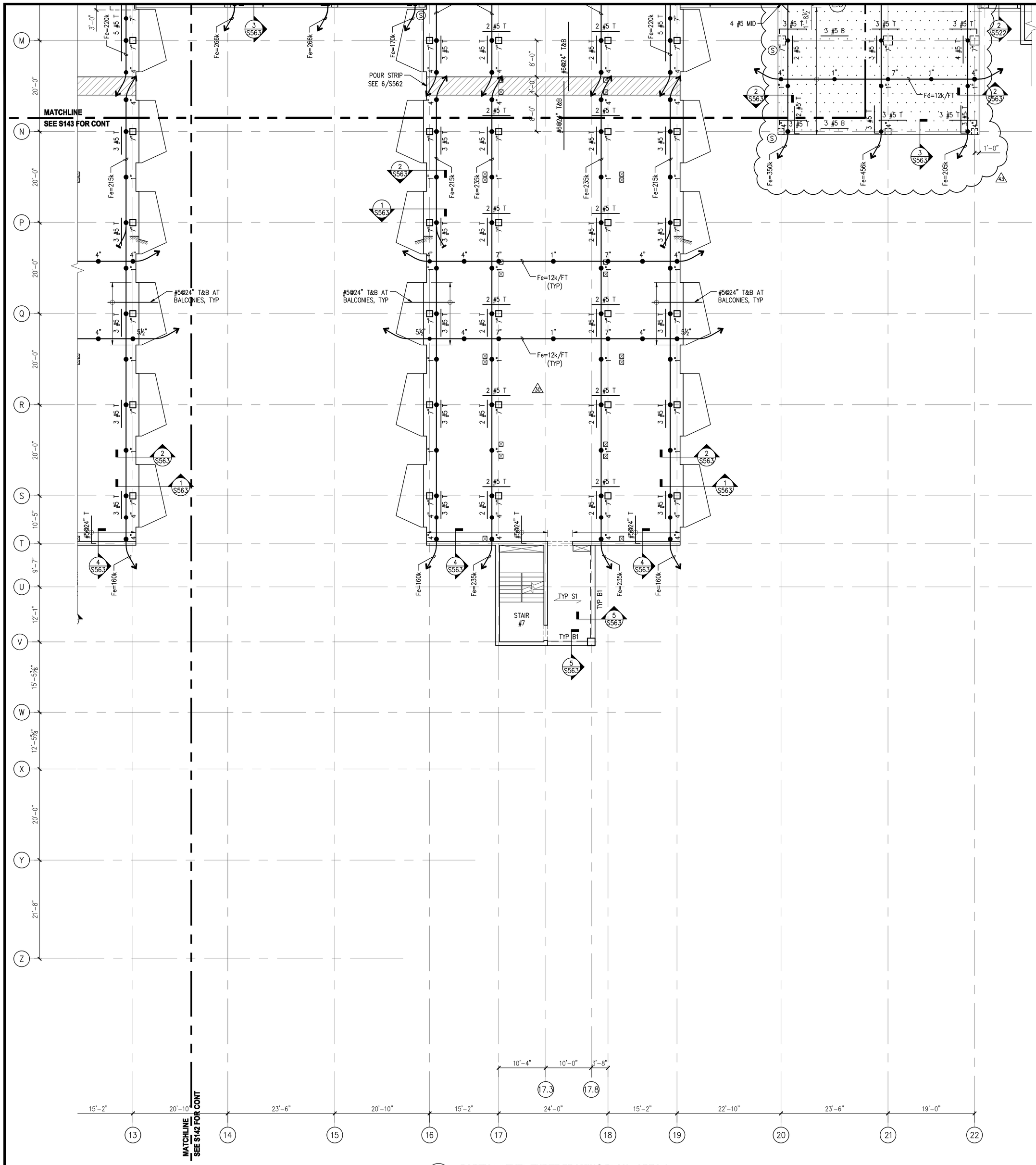


1 S144 **PARTIAL LEVEL THREE FRAMING PLAN - AREA 4**

1/8" = 1'-0"

SEE S143 FOR PLAN NOTES.

PROPERTY OF THE UNITED STATES GOVERNMENT – FOR OFFICIAL USE ONLY. Do not remove this notice. Properly destroy documents when no longer needed.

GSA
GENERAL SERVICES ADMINISTRATION
77 FORSYTH STREET
SUITE 600
ATLANTA, GA 30303
TEL: (404)331-3200

AFRH The Premier Retirement Community for America's Veterans

JACOBS
PROJECT MANAGEMENT CONSULTANT TO THE GENERAL SERVICES ADMINISTRATION

YATES CONSTRUCTION

SFCS Architecture Engineering Planning Interiors

URS
URS CORPORATION
2020 K ST, NW
SUITE 300
WASHINGTON D.C. 20006

ISSUED FOR CONSTRUCTION

CERTIFICATIONS

DISTRICT OF COLUMBIA
MARK W. ZIMPELMAN
8572
REGISTERED
PROFESSIONAL ENGINEER
09/24/08

KEY PLAN

| REVISION NOTES | | |
|---|---|---|
| MARK | DATE | DESCRIPTION |
| 2A | 06/02/08 | LEVEL 3 SLAB & PENETRATIONS |
| | 06/02/08 | ISSUED FOR CONSTRUCTION |
| 3A | 07/21/08 | REVISED POUR STRIP LOCATION |
| 3A | 09/08/08 | RE-ISSUED FOR CONSTRUCTION |
| 4A | 09/24/08 | REVISION TO LEVEL 3 CONNECTOR |

GRAPHIC SCALE

| CONTRACTORS | |
|---|---|
| A/E CON. NO. | GS-04P-07-EX-C-0099 |
| A/E TASK NO. | |
| CONS. CONTR. | |
| CONS. WORK | |
| PRIME A/E | |
| SUB A/E | |
| CONSTR. CON. | |

| BUILDING | |
|---|---|
| NAME | ARMED FORCES RETIREMENT HOME |
| STREET | 1800 BEACH DRIVE |
| CITY/ST./ZIP | GULFPORT, MS 39507 |
| BUILDING NO. | |
| OTHER BUILDING NOs. | |
| FACILITY CODE | |

| PROJECT | |
|---|---|
| PROJECT TITLE | ARMED FORCES RETIREMENT HOME GULFPORT, MISSISSIPPI |
| PROJECT DESCRIPTION | NEW CONSTRUCTION |
| PROJECT NO. | 31942982 |
| GSA PM | STEVEN SMITH |
| SUBMISSION | ISSUED FOR CONSTRUCTION |
| SUB. DATE | 09/08/2008 |

| DRAWING | |
|---|---|
| DRAWING TITLE | PARTIAL LEVEL 3 FRAMING PLAN – AREA 4 |
| FILE NAME | S-144-N0095730.DWG |
| FLOOR NO. | LEVEL 3 |
| DRAWN BY | JVS DATE DRAFTED: |
| CHECKED BY | MWZ SHEET SIZE: 34 X 44 |
| DRAWING NO. | 2A S 1 44 |
| | DISCIPLINE SHEET TYPE SEQUENCE |
| | SHEET 000 OF 000 |

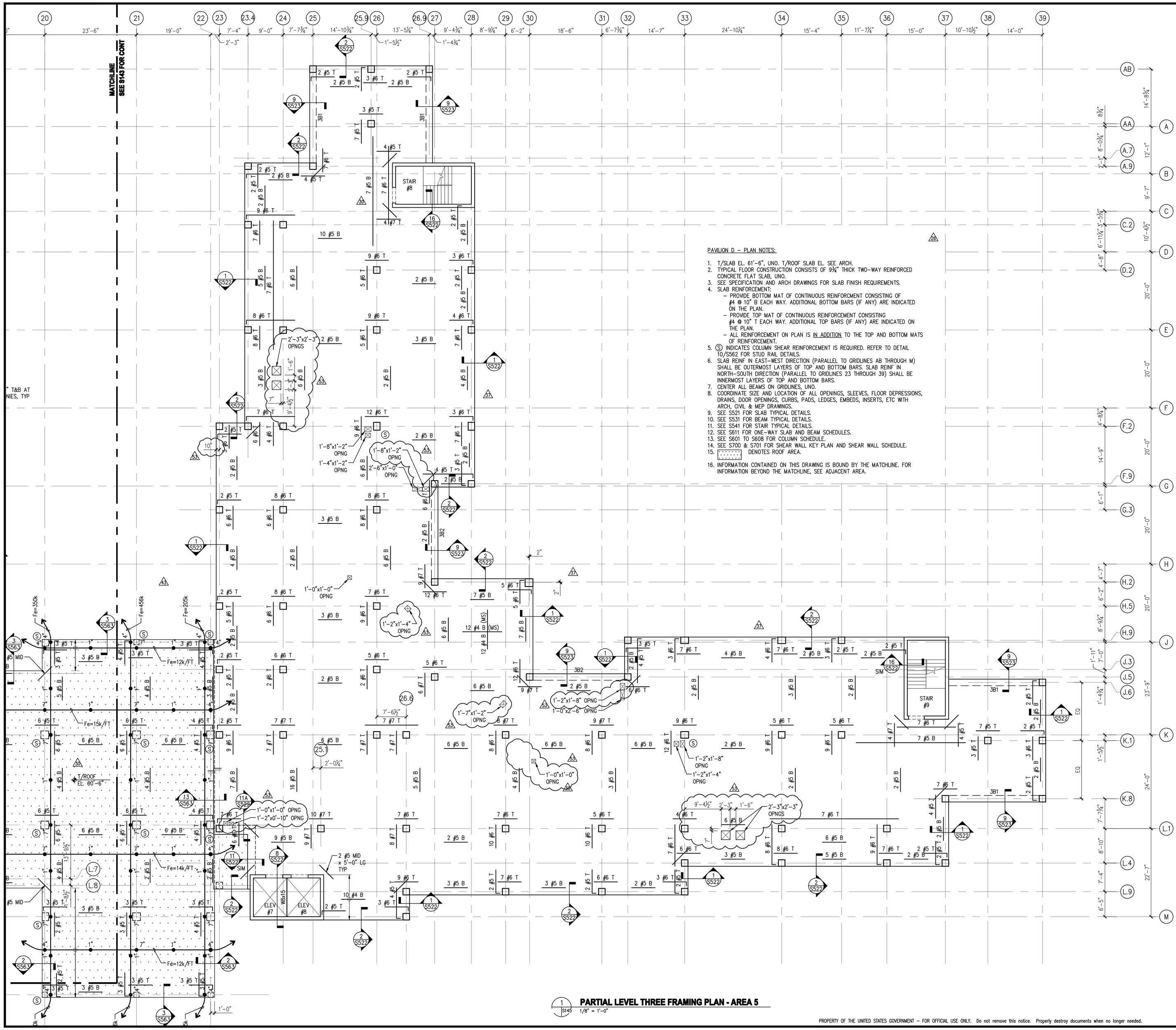


PAVILION D – PLAN NOTES:

1. T/SLAB EL. 61'-6", UNO. T/ROOF SLAB EL. SEE ARCH.
2. TYPICAL FLOOR CONSTRUCTION CONSISTS OF 9¾" THICK TWO-WAY REINFORCED CONCRETE FLAT SLAB, UNO.
3. SEE SPECIFICATION AND ARCH DRAWINGS FOR SLAB FINISH REQUIREMENTS.
4. SLAB REINFORCEMENT:
   - PROVIDE BOTTOM MAT OF CONTINUOUS REINFORCMENT CONSISTING OF #4 @ 10" B EACH WAY. ADDITIONAL BOTTOM BARS (IF ANY) ARE INDICATED ON THE PLAN.
   - PROVIDE TOP MAT OF CONTINUOUS REINFORCEMENT CONSISTING #4 @ 10" T EACH WAY. ADDITIONAL TOP BARS (IF ANY) ARE INDICATED ON THE PLAN.
   - ALL REINFORCEMENT ON PLAN IS IN ADDITION TO THE TOP AND BOTTOM MATS OF REINFORCEMENT.
5. (S) INDICATES COLUMN SHEAR REINFORCEMENT IS REQUIRED. REFER TO DETAIL 10/S562 FOR STUD RAIL DETAILS.
6. SLAB REINF IN EAST-WEST DIRECTION (PARALLEL TO GRIDLINES AB THROUGH M) SHALL BE OUTERMOST LAYERS OF TOP AND BOTTOM BARS. SLAB REINF IN NORTH-SOUTH DIRECTION (PARALLEL TO GRIDLINES 23 THROUGH 39) SHALL BE INNERMOST LAYERS OF TOP AND BOTTOM BARS.
7. CENTER ALL BEAMS ON GRIDLINES, UNO.
8. COORDINATE SIZE AND LOCATION OF ALL OPENINGS, SLEEVES, FLOOR DEPRESSIONS, DRAINS, DOOR OPENINGS, CURBS, PADS, LEDGES, EMBEDS, INSERTS, ETC WITH ARCH, CIVIL & MEP DRAWINGS.
9. SEE S521 FOR SLAB TYPICAL DETAILS.
10. SEE S531 FOR BEAM TYPICAL DETAILS.
11. SEE S541 FOR STAIR TYPICAL DETAILS.
12. SEE S611 FOR ONE-WAY SLAB AND BEAM SCHEDULES.
13. SEE S601 TO S608 FOR COLUMN SCHEDULE.
14. SEE S700 & S701 FOR SHEAR WALL KEY PLAN AND SHEAR WALL SCHEDULE.
15. ⋯ DENOTES ROOF AREA.
16. INFORMATION CONTAINED ON THIS DRAWING IS BOUND BY THE MATCHLINE. FOR INFORMATION BEYOND THE MATCHLINE, SEE ADJACENT AREA.

1 S145 **PARTIAL LEVEL THREE FRAMING PLAN - AREA 5**
1/8" = 1'-0"

PROPERTY OF THE UNITED STATES GOVERNMENT – FOR OFFICIAL USE ONLY. Do not remove this notice. Properly destroy documents when no longer needed.

GSA
GENERAL SERVICES ADMINISTRATION
77 FORSYTH STREET
SUITE 600
ATLANTA, GA 30303
TEL: (404)331-3200

AFRH The Premier Retirement Community for America's Veterans

JE JACOBS
PROJECT MANAGEMENT CONSULTANT TO THE GENERAL SERVICES ADMINISTRATION

YATES CONSTRUCTION

SFCS Architecture Engineering Planning Interiors

URS
URS CORPORATION
2020 K ST, NW
SUITE 300
WASHINGTON D.C. 20006

ISSUED FOR CONSTRUCTION

CERTIFICATIONS

DISTRICT OF COLUMBIA
MARK W. ZIMPFELMAN
8572
REGISTERED PROFESSIONAL ENGINEER
10/31/08

KEY PLAN

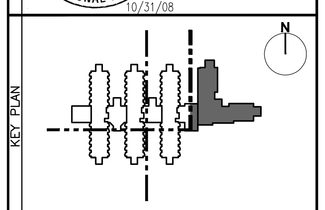

REVISION NOTES

| MARK | DATE | DESCRIPTION |
|---|---|---|
| 20 | 06/02/08 | LEVEL 3 SLAB & PENETRATIONS |
| | 06/02/08 | ISSUED FOR CONSTRUCTION |
| 20 | 06/20/08 | PENTHOUSE, PH ROOF & PAV D SLABS |
| 20 | 07/21/08 | REVISED POUR STRIP LOCATION |
| 21 | 09/08/08 | RE-ISSUED FOR CONSTRUCTION |
| 22 | 09/24/08 | REVISION TO LEVEL 3 CONNECTOR |
| 23 | 10/31/08 | REVISE SLAB OPENINGS |

DRAWING SCALE

CONTRACTORS

| | |
|---|---|
| A/E CON. NO. | GS-04P-07-EX-C-0099 |
| A/E TASK NO. | |
| CONS. CONTR. | |
| CONS. WORK | |
| PRIME A/E | |
| SUB A/E | |
| CONSTR. CON. | |

BUILDING

| | |
|---|---|
| NAME | ARMED FORCES RETIREMENT HOME |
| STREET | 1800 BEACH DRIVE |
| CITY/ST./ZIP | GULFPORT, MS 39507 |
| BUILDING NO. | |
| OTHER BUILDING NOs. | |
| FACILITY CODE | |

PROJECT

| | |
|---|---|
| PROJECT TITLE | ARMED FORCES RETIREMENT HOME GULFPORT, MISSISSIPPI |
| PROJECT DESCRIPTION | NEW CONSTRUCTION |
| PROJECT NO. | 31942982 |
| GSA PM | STEVEN SMITH |
| SUBMISSION | ISSUED FOR CONSTRUCTION |
| SUB. DATE | 09/08/2008 |

DRAWING

| | |
|---|---|
| DRAWING TITLE | PARTIAL LEVEL 3 FRAMING PLAN – AREA 5 |
| FILE NAME | S-145-N0095730.DWG |
| FLOOR NO. | LEVEL 3 |
| DRAWN BY | JVS DATE DRAFTED: |
| CHECKED BY | MWZ SHEET SIZE: 34 X 44 |
| DRAWING NO. | 20 S 1 45 |
| | DISCIPLINE SHEET TYPE SEQUENCE |
| | SHEET 000 OF 000 |

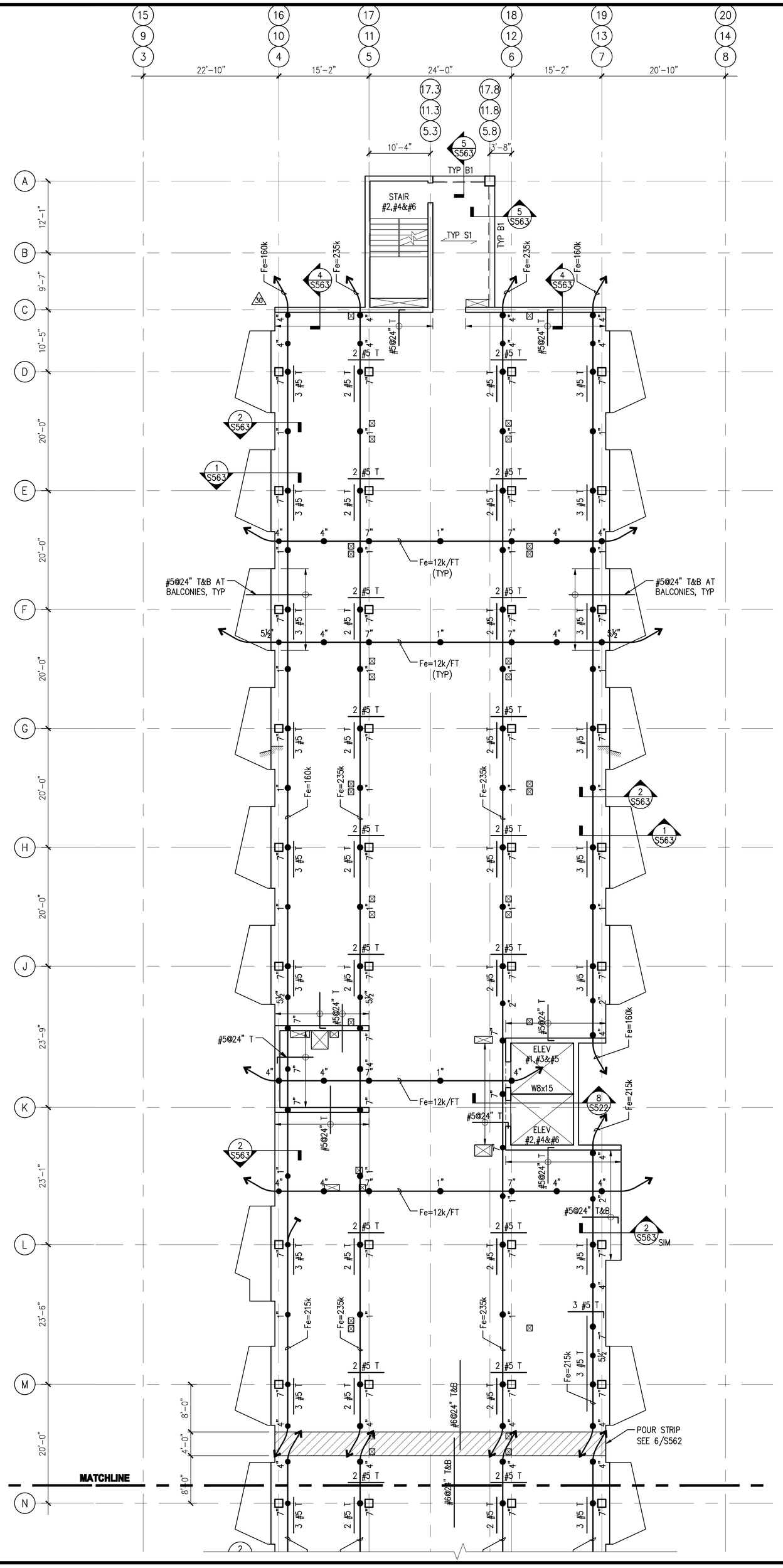


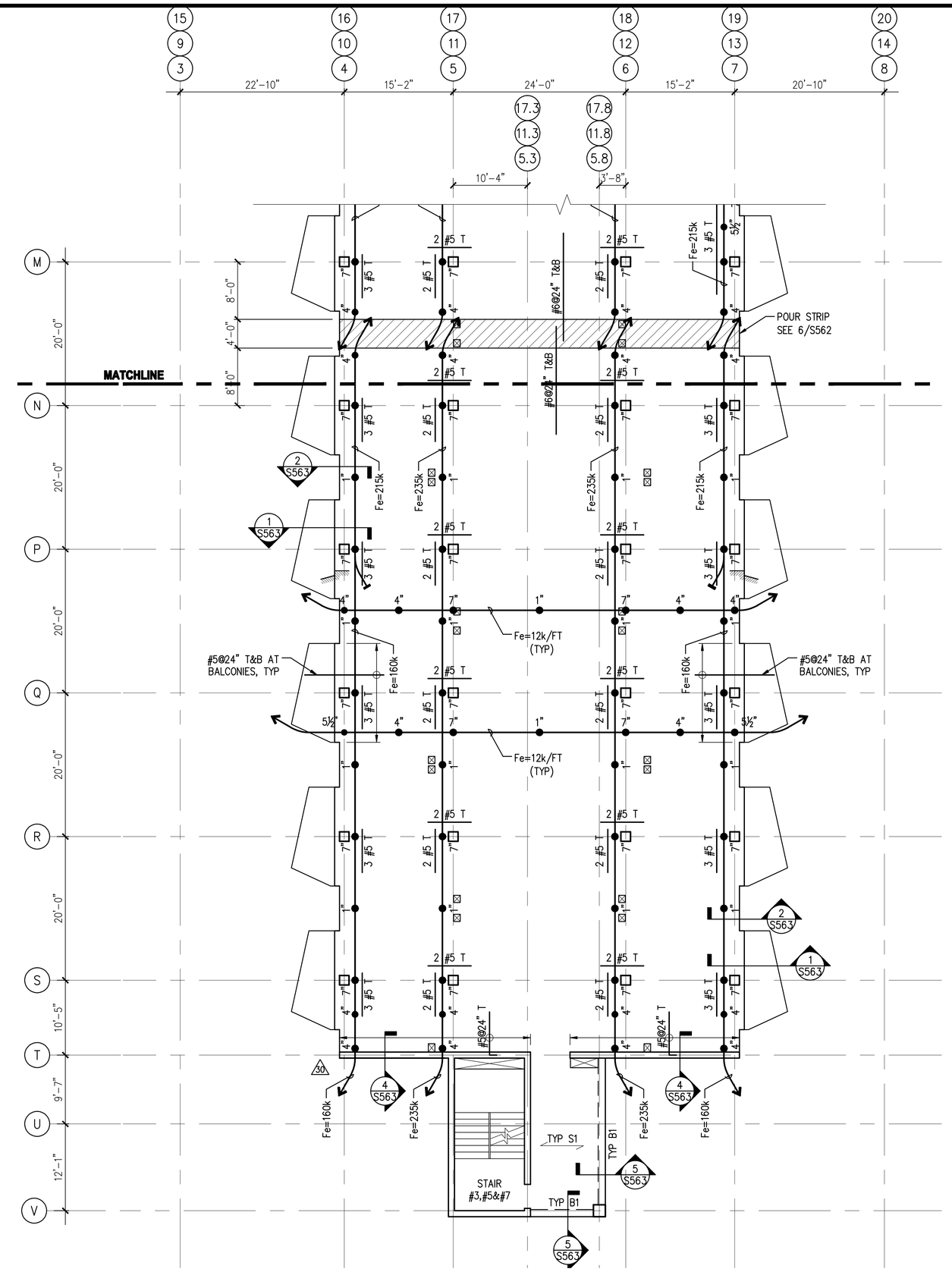


## 1 / S151 TYPICAL LEVEL FOUR, SIX & EIGHT FRAMING PLAN

1/8" = 1'-0"

PLAN NOTES:

1. T/SLAB EL. 69'-6" @ LEVEL 4, UNO.
   T/SLAB EL. 87'-6" @ LEVEL 6, UNO.
   T/SLAB EL. 105'-6" @ LEVEL 8, UNO.
2. TYPICAL FLOOR CONSTRUCTION CONSISTS OF 8" THICK TWO-WAY POST-TENSIONED CONCRETE FLAT SLAB, UNO.
3. SEE SPECIFICATION AND ARCH DRAWINGS FOR SLAB FINISH REQUIREMENTS.
4. POST-TENSIONING:
   - MAXIMUM PERMISSIBLE TENDON PROFILE SHALL BE 1" TO CGS FROM TOP OF SLAB AT COLUMN LINES AND 1" TO CGS FROM BOTTOM OF SLAB AT MID-SPANS, UNO.
   - ALL TENDON CGS ELEVATIONS NOTED ARE FROM THE BOTTOM OF SLAB.
   - SEE PLAN FOR DIMENSIONS LOCATING PROFILE OF TENDONS.
   - PROVIDE ADEQUATE SUPPORT TO MAINTAIN DESIGN PROFILE AND HOLD TENDONS IN PLACE DURING CONCRETE PLACEMENT.
5. SLAB REINFORCEMENT:
   - ALL REINFORCEMENT ON PLAN IS IN ADDITION TO THE TOP AND BOTTOM MATS OF REINFORCEMENT.
   - PROVIDE BOTTOM MAT OF CONTINUOUS REINFORCMENT CONSISTING OF #4 @ 24" EACH WAY. ADDITIONAL BOTTOM BARS (IF ANY) ARE INDICATED ON THE PLAN.
   - PROVIDE A TOP MAT OF CONTINUOUS REINFORCEMENT CONSISTING OF #4 @ 24" EACH WAY. ADDITIONAL TOP BARS ARE INDICATED ON THE PLAN.
6. (S) INDICATES COLUMN SHEAR REINFORCEMENT IS REQUIRED. REFER TO DETAIL 10/S562 FOR STUD RAIL DETAILS. (30)
7. PROVIDE EPOXY COATED BARS AT BALCONIES.
8. PROVIDE ENCAPSULATED POST TENSION ANCHORAGE AT ALL BALCONIES.
9. CENTER ALL BEAMS ON GRIDLINES, UNO.
10. COORDINATE SIZE AND LOCATION OF ALL OPENINGS, SLEEVES, FLOOR DEPRESSIONS, DRAINS, DOOR OPENINGS, CURBS, PADS, LEDGES, EMBEDS, INSERTS, ETC WITH ARCH, CIVIL & MEP DRAWINGS.
11. SEE S562 FOR POST-TENSIONED TWO WAY SLAB DETAILS AND PLACING SEQUENCE OF TENDONS AND REBAR. (30)
12. SEE S611 FOR NON-POST-TENSIONED BEAM SCHEDULE AND DETAILS.
13. SEE S601 TO S608 FOR COLUMN SCHEDULE AND DETAILS.
14. INFORMATION CONTAINED ON THIS DRAWING IS BOUND BY THE MATCHLINE. FOR INFORMATION BEYOND THE MATCHLINE, SEE ADJACENT AREA.

PROPERTY OF THE UNITED STATES GOVERNMENT – FOR OFFICIAL USE ONLY. Do not remove this notice. Properly destroy documents when no longer needed.

GENERAL SERVICES ADMINISTRATION
77 FORSYTH STREET
SUITE 600
ATLANTA, GA 30303
TEL: (404)331-3200

AFRH The Premier Retirement Community for America's Veterans

JACOBS
PROJECT MANAGEMENT CONSULTANT TO THE GENERAL SERVICES ADMINISTRATION

YATES CONSTRUCTION

SFCS Architecture Engineering Planning Interiors

URS CORPORATION
2020 K ST, NW
SUITE 300
WASHINGTON D.C. 20006

ISSUED FOR CONSTRUCTION

CERTIFICATIONS: DISTRICT OF COLUMBIA — MARK W. ZIMPFRAGEN — 8572 — REGISTERED PROFESSIONAL ENGINEER — 09/08/08

KEY PLAN

| MARK | DATE | DESCRIPTION |
|---|---|---|
| 2 | 06/12/08 | LEVEL 4-8 SLABS |
| | 06/12/08 | ISSUED FOR CONSTRUCTION |
| 30 | 07/21/08 | REVISED POUR STRIP LOCATION |
| 3 | 09/08/08 | RE-ISSUED FOR CONSTRUCTION |

REVISION NOTES

GRAPHIC SCALE

| | |
|---|---|
| A/E CON. NO. | GS-04P-07-EX-C-0099 |
| A/E TASK NO. | |
| CONS. CONTR. | |
| CONS. WORK | |
| PRIME A/E | |
| SUB A/E | |
| CONSTR. CON. | |
| NAME | ARMED FORCES RETIREMENT HOME |
| STREET | 1800 BEACH DRIVE |
| CITY/ST./ZIP | GULFPORT, MS 39507 |
| BUILDING NO. | |
| OTHER BUILDING NOs. | |
| FACILITY CODE | |
| PROJECT TITLE | ARMED FORCES RETIREMENT HOME GULFPORT, MISSISSIPPI |
| PROJECT DESCRIPTION | NEW CONSTRUCTION |
| PROJECT NO. | 31942982 |
| GSA PM | STEVEN SMITH |
| SUBMISSION | ISSUED FOR CONSTRUCTION |
| SUB. DATE | 09/08/2008 |
| DRAWING TITLE | TYPICAL LEVEL 4, 6 & 8 FRAMING PLAN |
| FILE NAME | S-151-N0095730.DWG |
| FLOOR NO. | LEVEL 4, 6 & 8 |
| DRAWN BY | JVG DATE DRAFTED: |
| CHECKED BY | MWZ SHEET SIZE: 34 X 44 |
| DRAWING NO. | 2 S 1 51 (DISCIPLINE / SHEET TYPE / SEQUENCE) |
| | SHEET 000 OF 000 |

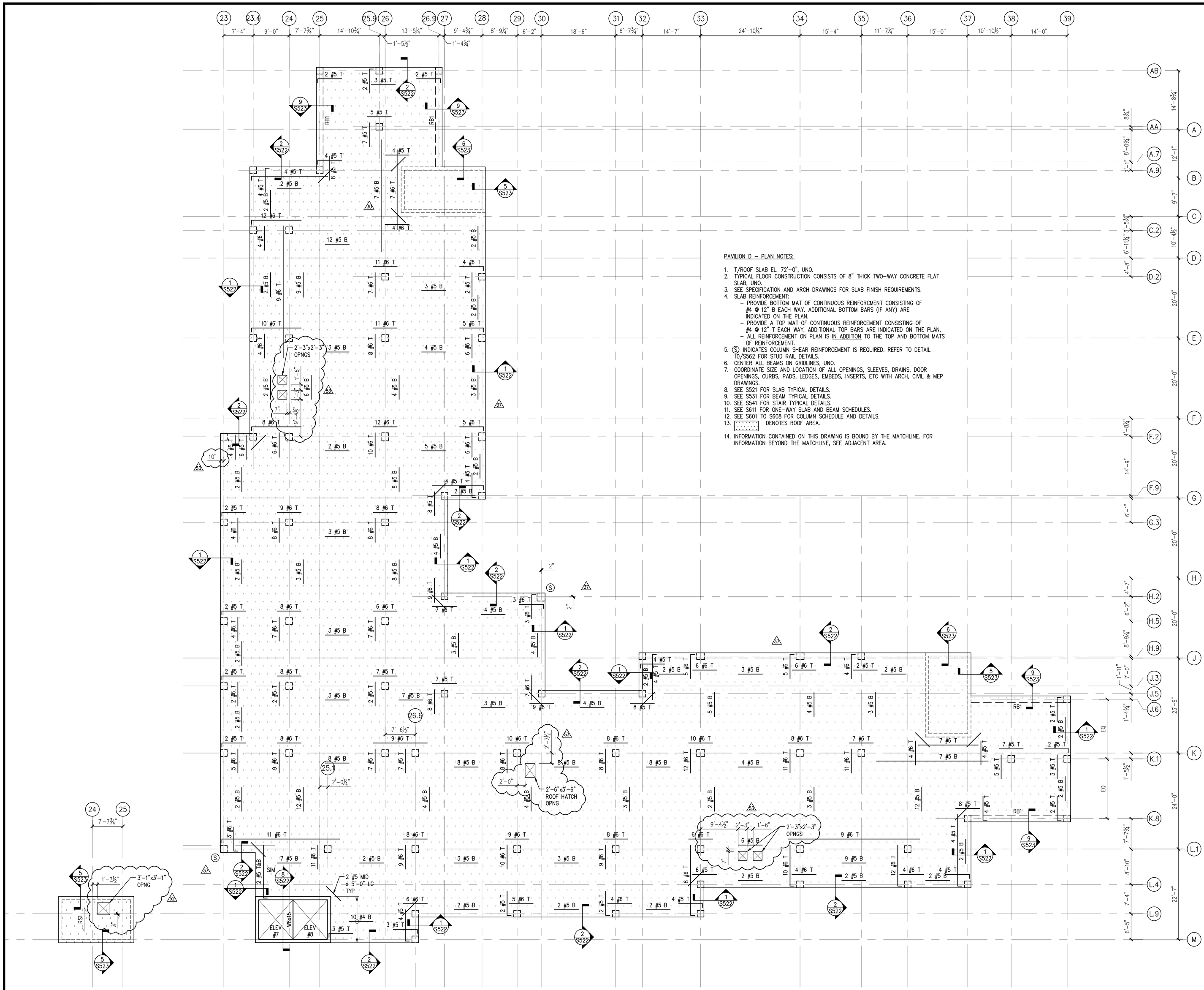


2 S155 **EMR FRAMING PLAN**
1/8" = 1'-0"
T/SLAB EL. 78'-7".

1 S155 **PARTIAL ROOF FRAMING PLAN - AREA 5**
1/8" = 1'-0"

PROPERTY OF THE UNITED STATES GOVERNMENT – FOR OFFICIAL USE ONLY. Do not remove this notice. Properly destroy documents when no longer needed.

GSA
GENERAL SERVICES ADMINISTRATION
77 FORSYTH STREET
SUITE 600
ATLANTA, GA 30303
TEL: (404)331-3200

AFRH The Premier Retirement Community for America's Veterans

JE JACOBS
PROJECT MANAGEMENT CONSULTANT TO THE GENERAL SERVICES ADMINISTRATION

YATES CONSTRUCTION

SFCS Architecture Engineering Planning Interiors

URS
URS CORPORATION
2020 K ST, NW
SUITE 300
WASHINGTON D.C. 20006

ISSUED FOR CONSTRUCTION

CERTIFICATIONS

DISTRICT OF COLUMBIA
MARK W. ZIMPELMAN
8572
REGISTERED PROFESSIONAL ENGINEER
10/31/08

KEY PLAN

REVISION NOTES

| MARK | DATE | DESCRIPTION |
|---|---|---|
| 26 | 06/20/08 | PENTHOUSE, PH ROOF & PAV D SLABS |
| | 06/20/08 | ISSUED FOR CONSTRUCTION |
| 25 | 07/21/08 | REVISED POUR STRIP LOCATION |
| 23 | 09/08/08 | RE-ISSUED FOR CONSTRUCTION |
| 24 | 10/31/08 | REVISE SLAB OPENINGS |

DRAWING SCALE

CONTRACTORS

| | |
|---|---|
| A/E CON. NO. | GS-04P-07-EX-C-0099 |
| A/E TASK NO. | |
| CONS. CONTR. | |
| CONS. WORK | |
| PRIME A/E | |
| SUB A/E | |
| CONSTR. CON. | |

BUILDING

| | |
|---|---|
| NAME | ARMED FORCES RETIREMENT HOME |
| STREET | 1800 BEACH DRIVE |
| CITY/ST./ZIP | GULFPORT, MS 39507 |
| BUILDING NO. | |
| OTHER BUILDING NOs. | |
| FACILITY CODE | |

PROJECT

| | |
|---|---|
| PROJECT TITLE | ARMED FORCES RETIREMENT HOME GULFPORT, MISSISSIPPI |
| PROJECT DESCRIPTION | NEW CONSTRUCTION |
| PROJECT NO. | 31942982 |
| GSA PM | STEVEN SMITH |
| SUBMISSION | ISSUED FOR CONSTRUCTION |
| SUB. DATE | 09/08/2008 |

DRAWING

| | |
|---|---|
| DRAWING TITLE | PARTIAL ROOF FRAMING PLAN – AREA 5 |
| FILE NAME | S-155-N0095730.DWG |
| FLOOR NO. | ROOF |
| DRAWN BY | JVS DATE DRAFTED: |
| CHECKED BY | MWZ SHEET SIZE: 34 X 44 |
| DRAWING NO. | 26 S 1 55 |
| | DISCIPLINE SHEET TYPE SEQUENCE |
| | SHEET 000 OF 000 |

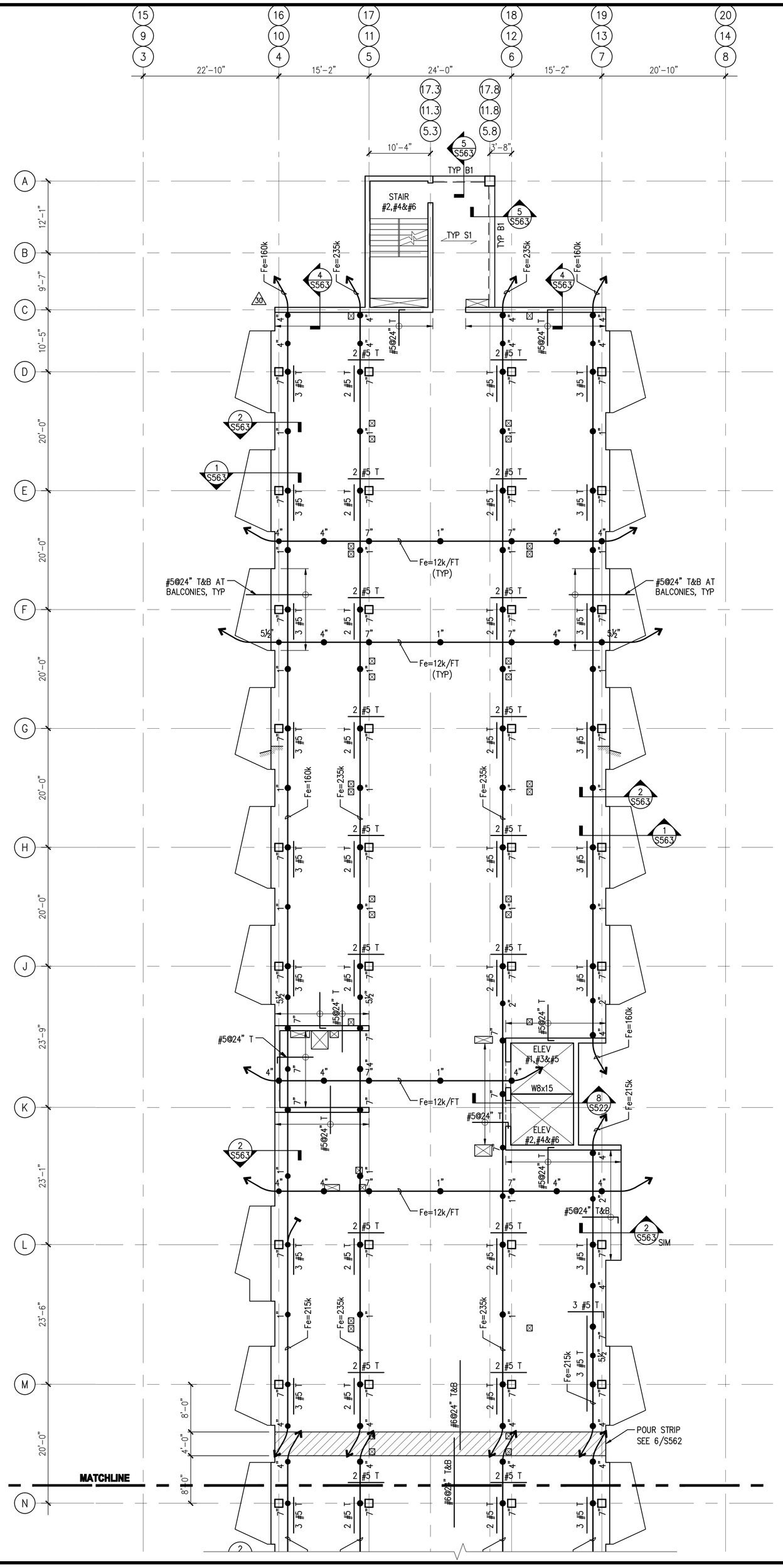


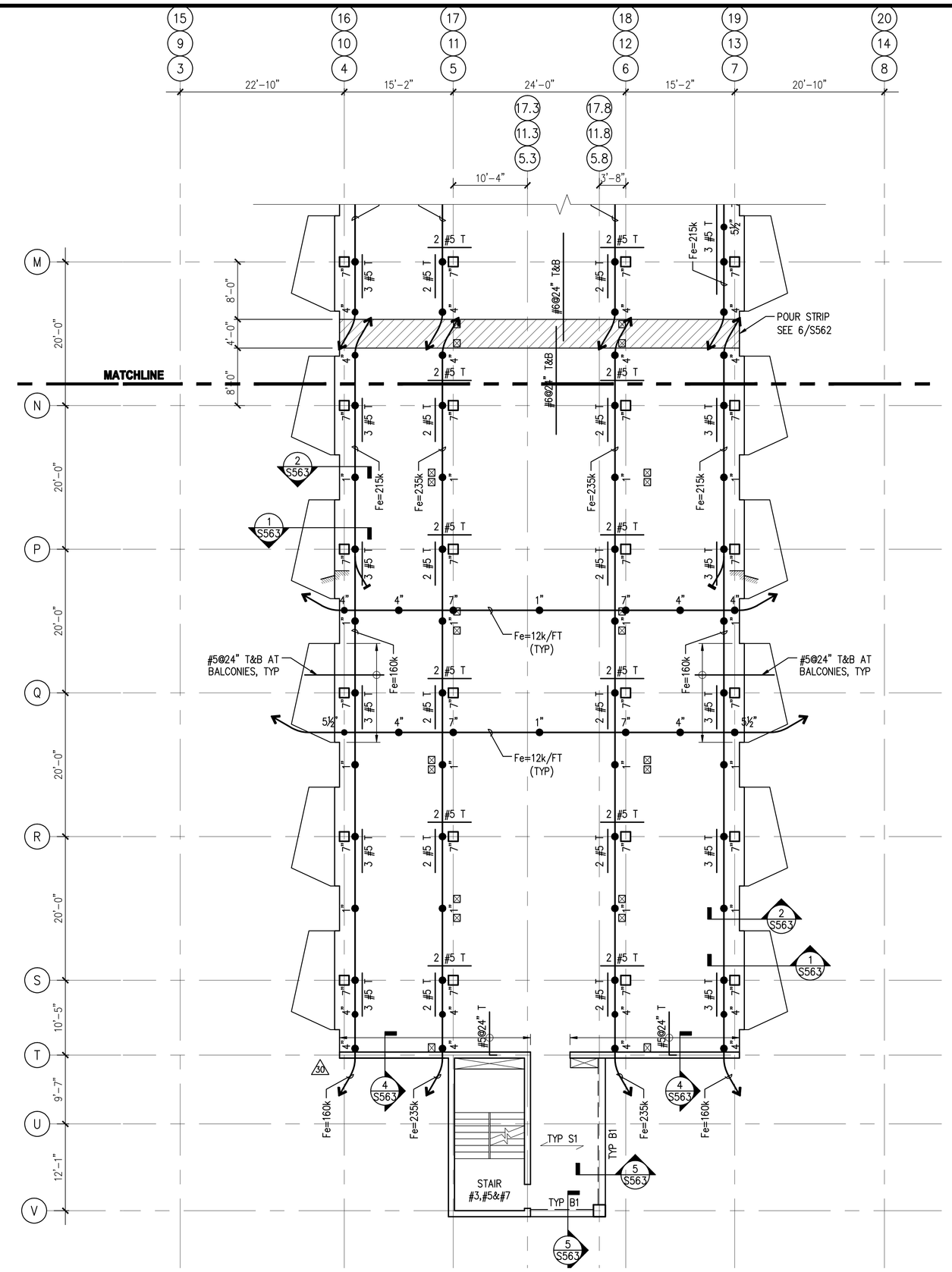


## 1 / S161 TYPICAL LEVEL FIVE & SEVEN FRAMING PLAN

1/8" = 1'-0"

PLAN NOTES: 30

1. T/SLAB EL. 78'-6" @ LEVEL 5, UNO.
   T/SLAB EL. 96'-6" @ LEVEL 7, UNO.
2. TYPICAL FLOOR CONSTRUCTION CONSISTS OF 8" THICK TWO-WAY POST-TENSIONED CONCRETE FLAT SLAB, UNO.
3. SEE SPECIFICATION AND ARCH DRAWINGS FOR SLAB FINISH REQUIREMENTS.
4. POST-TENSIONING:
   - MAXIMUM PERMISSIBLE TENDON PROFILE SHALL BE 1" TO CGS FROM TOP OF SLAB AT COLUMN LINES AND 1" TO CGS FROM BOTTOM OF SLAB AT MID-SPANS, UNO.
   - ALL TENDON CGS ELEVATIONS NOTED ARE FROM THE BOTTOM OF SLAB.
   - SEE PLAN FOR DIMENSIONS LOCATING PROFILE OF TENDONS.
   - PROVIDE ADEQUATE SUPPORT TO MAINTAIN DESIGN PROFILE AND HOLD TENDONS IN PLACE DURING CONCRETE PLACEMENT.
5. SLAB REINFORCEMENT:
   - ALL REINFORCEMENT ON PLAN IS IN ADDITION TO THE TOP AND BOTTOM MATS OF REINFORCEMENT.
   - PROVIDE BOTTOM MAT OF CONTINUOUS REINFORCMENT CONSISTING OF #4 @ 24" EACH WAY. ADDITIONAL BOTTOM BARS (IF ANY) ARE INDICATED ON THE PLAN.
   - PROVIDE A TOP MAT OF CONTINUOUS REINFORCEMENT CONSISTING OF #4 @ 24" EACH WAY. ADDITIONAL TOP BARS ARE INDICATED ON THE PLAN.
6. (S) INDICATES COLUMN SHEAR REINFORCEMENT IS REQUIRED. REFER TO DETAIL 10/S562 FOR STUD RAIL DETAILS. 30
7. PROVIDE EPOXY COATED BARS AT BALCONIES.
8. PROVIDE ENCAPSULATED POST TENSION ANCHORAGE AT ALL BALCONIES.
9. CENTER ALL BEAMS ON GRIDLINES, UNO.
10. COORDINATE SIZE AND LOCATION OF ALL OPENINGS, SLEEVES, FLOOR DEPRESSIONS, DRAINS, DOOR OPENINGS, CURBS, PADS, LEDGES, EMBEDS, INSERTS, ETC WITH ARCH, CIVIL & MEP DRAWINGS.
11. SEE S562 FOR POST-TENSIONED TWO WAY SLAB DETAILS AND PLACING SEQUENCE OF TENDONS AND REBAR. 30
12. SEE S611 FOR NON-POST-TENSIONED BEAM SCHEDULE AND DETAILS.
13. SEE S601 TO S608 FOR COLUMN SCHEDULE AND DETAILS.
14. INFORMATION CONTAINED ON THIS DRAWING IS BOUND BY THE MATCHLINE. FOR INFORMATION BEYOND THE MATCHLINE, SEE ADJACENT AREA.

PROPERTY OF THE UNITED STATES GOVERNMENT – FOR OFFICIAL USE ONLY. Do not remove this notice. Properly destroy documents when no longer needed.

GENERAL SERVICES ADMINISTRATION
77 FORSYTH STREET
SUITE 600
ATLANTA, GA 30303
TEL: (404)331-3200

AFRH The Premier Retirement Community for America's Veterans

JACOBS
PROJECT MANAGEMENT CONSULTANT TO THE GENERAL SERVICES ADMINISTRATION

YATES CONSTRUCTION

SFCS Architecture Engineering Planning Interiors

URS CORPORATION
2020 K ST, NW
SUITE 300
WASHINGTON D.C. 20006

ISSUED FOR CONSTRUCTION

CERTIFICATIONS: DISTRICT OF COLUMBIA — MARK W. ZIMPRELMAN — 8572 — REGISTERED PROFESSIONAL ENGINEER — 09/08/08

KEY PLAN

REVISION NOTES

| MARK | DATE | DESCRIPTION |
|---|---|---|
| 29 | 06/12/08 | LEVEL 4-8 SLABS |
| | 06/12/08 | ISSUED FOR CONSTRUCTION |
| 30 | 07/21/08 | REVISED POUR STRIP LOCATION |
| 31 | 09/08/08 | RE-ISSUED FOR CONSTRUCTION |

GRAPHIC SCALE

| | |
|---|---|
| CONTRACTORS: A/E CON. NO. | GS-04P-07-EX-C-0099 |
| A/E TASK NO. | |
| CONS. CONTR. | |
| CONS. WORK | |
| PRIME A/E | |
| SUB A/E | |
| CONSTR. CON. | |
| BUILDING: NAME | ARMED FORCES RETIREMENT HOME |
| STREET | 1800 BEACH DRIVE |
| CITY/ST./ZIP | GULFPORT, MS 39507 |
| BUILDING NO. | |
| OTHER BUILDING NOs. | |
| FACILITY CODE | |
| PROJECT: PROJECT TITLE | ARMED FORCES RETIREMENT HOME GULFPORT, MISSISSIPPI |
| PROJECT DESCRIPTION | NEW CONSTRUCTION |
| PROJECT NO. | 31942982 |
| GSA PM | STEVEN SMITH |
| SUBMISSION | ISSUED FOR CONSTRUCTION |
| SUB. DATE | 09/08/2008 |
| DRAWING: DRAWING TITLE | TYPICAL LEVEL 5 & 7 FRAMING PLAN |
| FILE NAME | S-161-N0095730.DWG |
| FLOOR NO. | LEVEL 5 & 7 |
| DRAWN BY | JVS DATE DRAFTED: |
| CHECKED BY | MWZ SHEET SIZE: 34 X 44 |
| DRAWING NO. 29 | S 1 61 (DISCIPLINE SHEET TYPE SEQUENCE) |
| | SHEET 000 OF 000 |

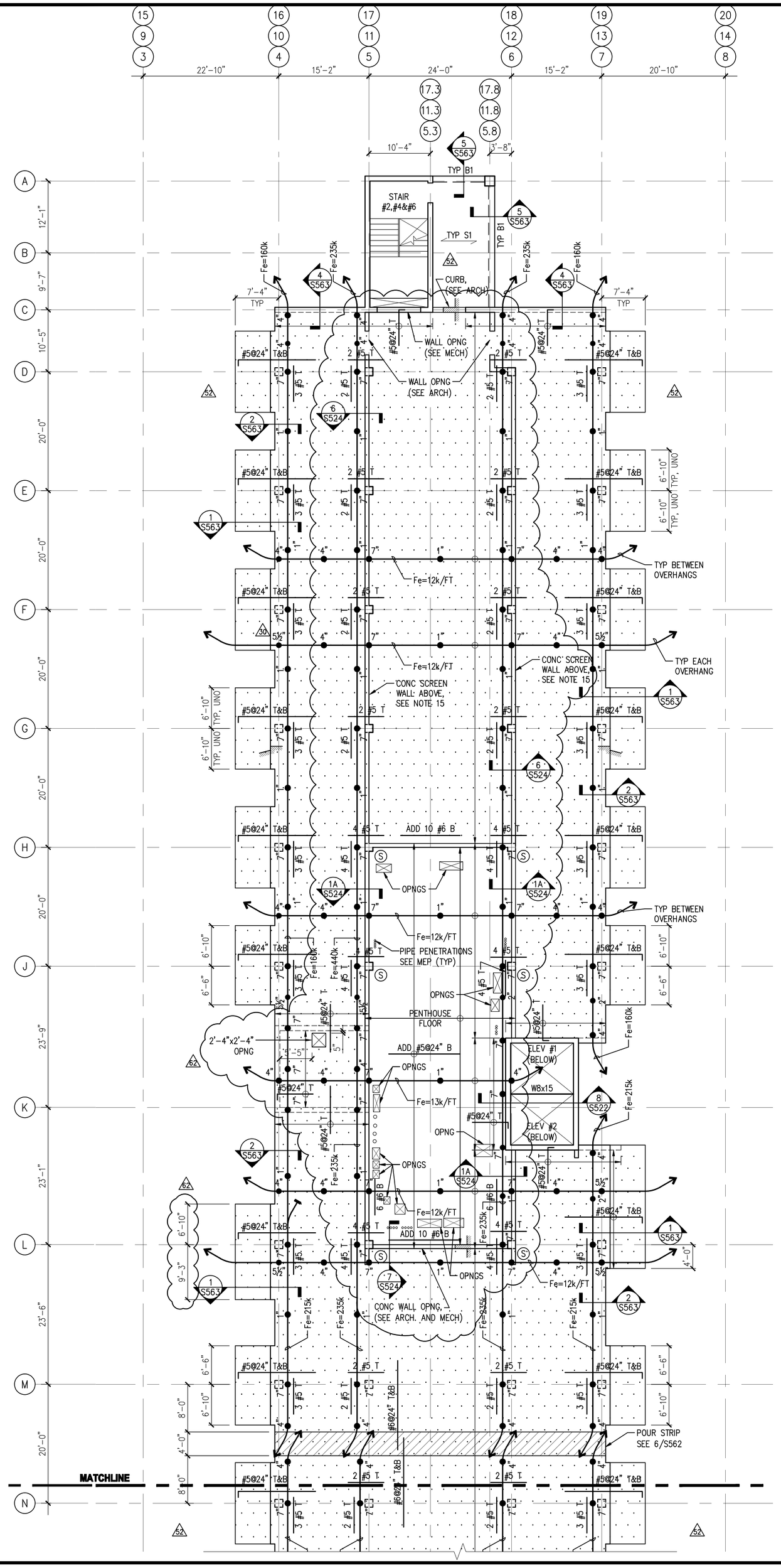


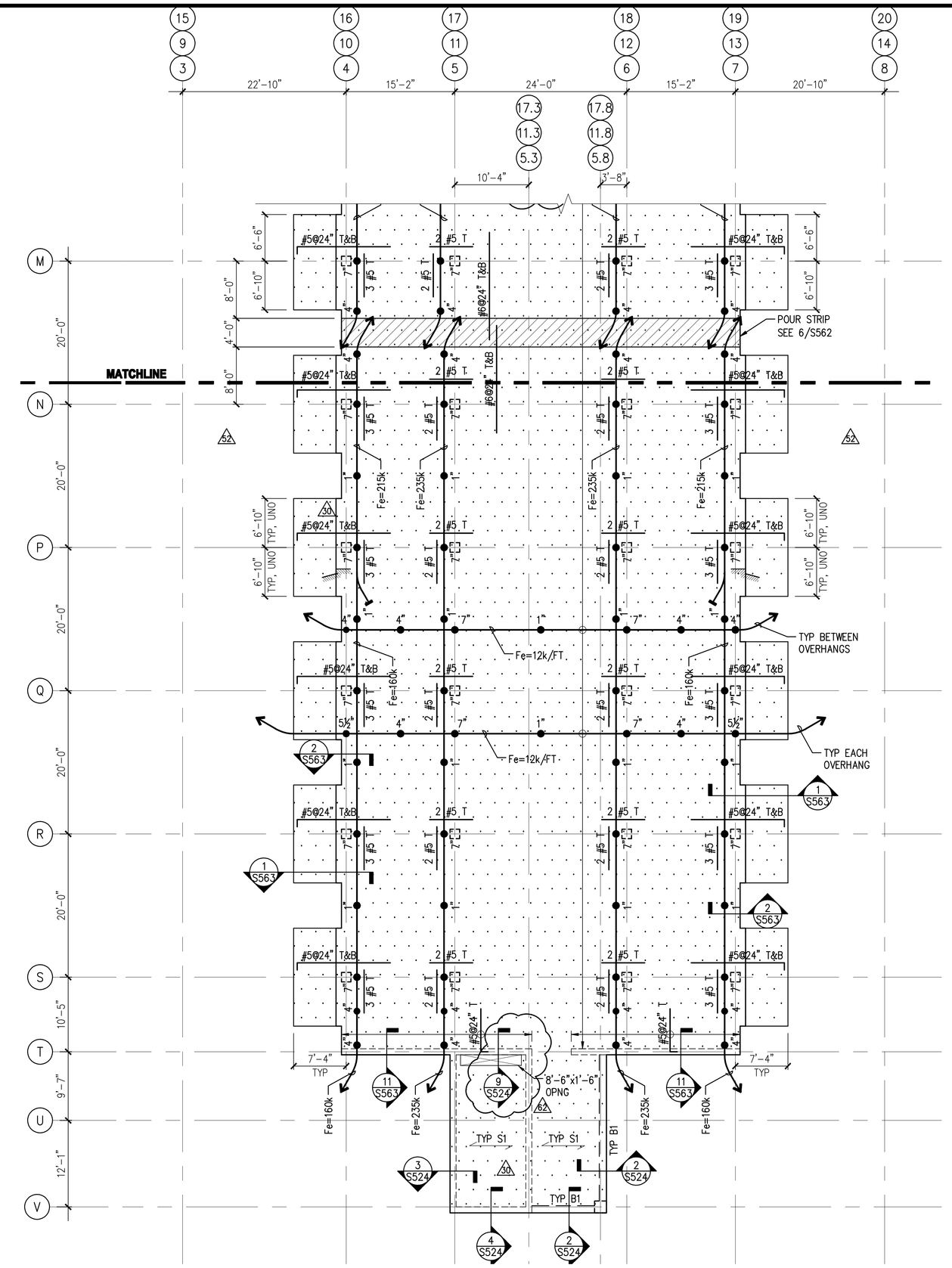


## TYPICAL ROOF / PENTHOUSE FRAMING PLAN

1 / S171 — 1/8" = 1'-0"

PLAN NOTES:

1. T/SLAB EL. 116'-0", UNO. T/ROOF SLAB EL. SEE ARCH, UNO.
   T/ROOF SLAB EL. 72'-0" AT AREA D, UNO.
2. TYPICAL FLOOR CONSTRUCTION CONSISTS OF 8" THICK TWO-WAY POST-TENSIONED CONCRETE FLAT SLAB, UNO. PROVIDE 7½" THICK SLAB AT BALCONIES.
3. SEE SPECIFICATION AND ARCH DRAWINGS FOR SLAB FINISH REQUIREMENTS.
4. POST-TENSIONING:
   - MAXIMUM PERMISSIBLE TENDON PROFILE SHALL BE 1" TO CGS FROM TOP OF SLAB AT COLUMN LINES AND 1" TO CGS FROM BOTTOM OF SLAB AT MID-SPANS, UNO.
   - ALL TENDON CGS ELEVATIONS NOTED ARE FROM THE BOTTOM OF SLAB.
   - SEE PLAN FOR DIMENSIONS LOCATING PROFILE OF TENDONS.
   - PROVIDE ADEQUATE SUPPORT TO MAINTAIN DESIGN PROFILE AND HOLD TENDONS IN PLACE DURING CONCRETE PLACEMENT.
5. SLAB REINFORCEMENT:
   - ALL REINFORCEMENT ON PLAN IS IN ADDITION TO THE TOP AND BOTTOM MATS OF REINFORCEMENT.
   - PROVIDE BOTTOM MAT OF CONTINUOUS REINFORCEMENT CONSISTING OF #4 @ 24" EACH WAY. ADDITIONAL BOTTOM BARS (IF ANY) ARE INDICATED ON THE PLAN.
   - PROVIDE A TOP MAT OF CONTINUOUS REINFORCEMENT CONSISTING OF #4 @ 24" EACH WAY. ADDITIONAL TOP BARS ARE INDICATED ON THE PLAN.
6. (S) INDICATES COLUMN SHEAR REINFORCEMENT IS REQUIRED. REFER TO DETAIL 10/S562 FOR STUD RAIL DETAILS.
7. PROVIDE EPOXY COATED BARS AT BALCONY ROOFS.
8. PROVIDE ENCAPSULATED POST TENSION ANCHORAGE AT ALL BALCONY ROOFS.
9. CENTER ALL BEAMS ON GRIDLINES, UNO.
10. COORDINATE SIZE AND LOCATION OF ALL OPENINGS, SLEEVES, FLOOR DEPRESSIONS, DRAINS, DOOR OPENINGS, CURBS, PADS, LEDGES, EMBEDS, INSERTS, ETC WITH ARCH, CIVIL & MEP DRAWINGS. PROVIDE MINIMUM 3" CLEAR BTWN INDIVIDUAL OPENINGS AND PIPE PENETRATIONS. 62
11. SEE S562 FOR POST-TENSIONED TWO WAY SLAB DETAILS AND PLACING SEQUENCE OF TENDONS AND REBAR.
12. SEE S611 FOR NON-POST-TENSIONED BEAM SCHEDULE AND DETAILS.
13. SEE S601 TO S608 FOR COLUMN SCHEDULE AND DETAILS.
14. ⋯ DENOTES ROOF AREA.
15. CAST-IN-PLACE CONCRETE SCREEN WALLS ALONG GRIDS 5, 6, 11, 12 17 & 18 BTWN GRIDS C & H AND WING WALLS SHALL HAVE EPOXY-COATED REINFORCEMENT. SEE ARCH FOR LAYOUT OF WALL OPENINGS. 62
16. INFORMATION CONTAINED ON THIS DRAWING IS BOUND BY THE MATCHLINE. FOR INFORMATION BEYOND THE MATCHLINE, SEE ADJACENT AREA.

PROPERTY OF THE UNITED STATES GOVERNMENT – FOR OFFICIAL USE ONLY. Do not remove this notice. Properly destroy documents when no longer needed.

GSA — GENERAL SERVICES ADMINISTRATION
77 FORSYTH STREET
SUITE 600
ATLANTA, GA 30303
TEL: (404)331-3200

AFRH — The Premier Retirement Community for America's Veterans

JACOBS — PROJECT MANAGEMENT CONSULTANT TO THE GENERAL SERVICES ADMINISTRATION

YATES CONSTRUCTION

SFCS — Architecture Engineering Planning Interiors

URS — URS CORPORATION
2020 K ST, NW
SUITE 300
WASHINGTON D.C. 20006

CERTIFICATIONS

DISTRICT OF COLUMBIA — MARK W. ZIMPFRAMAN — 8572 — REGISTERED PROFESSIONAL ENGINEER — 1/09/09

KEY PLAN

REVISION NOTES

| MARK | DATE | DESCRIPTION |
|---|---|---|
| 26 | 06/20/08 | PENTHOUSE, PH ROOF & PAV D SLABS |
| | 06/20/08 | ISSUED FOR CONSTRUCTION |
| 53 | 07/21/08 | REVISED POUR STRIP LOCATION |
| 57 | 09/08/08 | RE-ISSUED FOR CONSTRUCTION |
| 62 | 10/29/08 | ADD BALCONY ROOFS |
| 62 | 01/09/09 | PENTHOUSE & STEEL REDESIGN |

GRAPHIC SCALE

CONTRACTORS

| | |
|---|---|
| A/E CON. NO. | GS-04P-07-EX-C-0099 |
| A/E TASK NO. | |
| CONS. CONTR. | |
| CONS. WORK | |
| PRIME A/E | |
| SUB A/E | |
| CONSTR. CON. | |

BUILDING

| | |
|---|---|
| NAME | ARMED FORCES RETIREMENT HOME |
| STREET | 1800 BEACH DRIVE |
| CITY/ST./ZIP | GULFPORT, MS 39507 |
| BUILDING NO. | |
| OTHER BUILDING NOs. | |
| FACILITY CODE | |

PROJECT

| | |
|---|---|
| PROJECT TITLE | ARMED FORCES RETIREMENT HOME GULFPORT, MISSISSIPPI |
| PROJECT DESCRIPTION | NEW CONSTRUCTION |
| PROJECT NO. | 31942982 |
| GSA PM | STEVEN SMITH |
| SUBMISSION | ISSUED FOR CONSTRUCTION |
| SUB. DATE | 09/08/2008 |

DRAWING

| | |
|---|---|
| DRAWING TITLE | TYPICAL ROOF/PENTHOUSE FRAMING PLAN |
| FILE NAME | S-171-N0095730.DWG |
| FLOOR NO. | ROOF/PENTHOUSE |
| DRAWN BY | JVS — DATE DRAFTED: |
| CHECKED BY | MWZ — SHEET SIZE: 34 X 44 |
| DRAWING NO. | 26 — S 1 71 (DISCIPLINE / SHEET TYPE / SEQUENCE) |
| | SHEET 000 OF 000 |

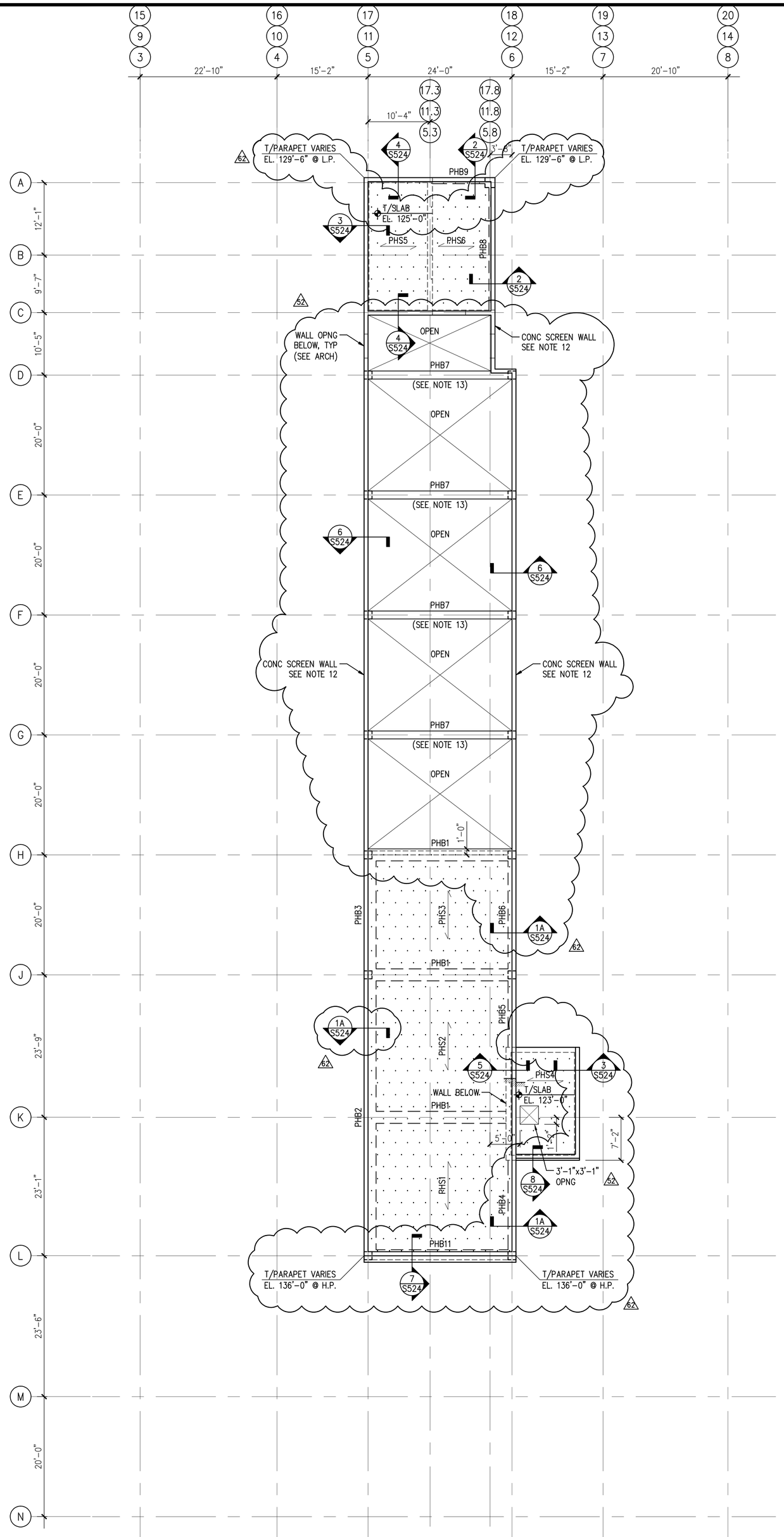


## 1 / S181 TYPICAL PENTHOUSE ROOF FRAMING PLAN

1/8" = 1'-0"

PLAN NOTES:

1. T/SLAB EL. 133'-0", UNO. T/ SCREEN WALL BEAM EL. VARIES, SEE ARCH.
2. TYPICAL ROOF CONSTRUCTION CONSISTS OF 8" THICK ONE-WAY CONCRETE SLAB AND CONCRETE BEAMS, UNO.
3. SEE SPECIFICATION AND ARCH DRAWINGS FOR SLAB FINISH REQUIREMENTS.
4. SLAB REINFORCEMENT:
   - REFER TO THE ONE-WAY SLAB SCHEDULE ON S611 AND DETAILS ON S521 FOR REQUIRED REINFORCEMENT.
5. CENTER ALL BEAMS ON GRIDLINES, UNO.
6. COORDINATE SIZE AND LOCATION OF ALL OPENINGS, SLEEVES, FLOOR DEPRESSIONS, DRAINS, DOOR OPENINGS, CURBS, PADS, LEDGES, EMBEDS, INSERTS, ETC WITH ARCH, CIVIL & MEP DRAWINGS.
7. SEE S521 FOR SLAB TYPICAL DETAILS.
8. SEE S531 FOR BEAM TYPICAL DETAILS.
9. SEE S611 FOR ONE-WAY SLAB, BEAM AND POST-TENSIONED BEAM SCHEDULES.
10. SEE S601 TO S608 FOR COLUMN SCHEDULE.
11. DENOTES ROOF AREA.
12. CAST-IN-PLACE CONCRETE SCREEN WALLS ALONG GRIDS 5, 6, 11, 12 17 & 18 BTWN GRIDS C & H AND WING WALLS SHALL HAVE EPOXY-COATED REINFORCEMENT. SEE ARCH FOR LAYOUT OF WALL OPENINGS.
13. T/BEAM ELEVATION SHALL MATCH T/SCREEN WALL, SEE PLAN AND ARCH.

PROPERTY OF THE UNITED STATES GOVERNMENT – FOR OFFICIAL USE ONLY. Do not remove this notice. Properly destroy documents when no longer needed.

GSA
GENERAL SERVICES ADMINISTRATION
77 FORSYTH STREET
SUITE 600
ATLANTA, GA 30303
TEL: (404)331-3200

AFRH The Premier Retirement Community for America's Veterans

JACOBS
PROJECT MANAGEMENT CONSULTANT TO THE GENERAL SERVICES ADMINISTRATION

YATES CONSTRUCTION

SFCS Architecture Engineering Planning Interiors

URS
URS CORPORATION
2020 K ST, NW
SUITE 300
WASHINGTON D.C. 20006

CERTIFICATIONS

DISTRICT OF COLUMBIA
MARK W. ZIMPELMAN
8572
REGISTERED
PROFESSIONAL ENGINEER
01/09/09

KEY PLAN

N

REVISION NOTES

| MARK | DATE | DESCRIPTION |
|---|---|---|
| 26 | 06/20/08 | PENTHOUSE, PH ROOF & PAV D SLABS |
| | 06/20/08 | ISSUED FOR CONSTRUCTION |
| 27 | 09/08/08 | RE-ISSUED FOR CONSTRUCTION |
| 28 | 10/29/08 | ADD BALCONY ROOFS |
| 29 | 01/09/09 | PENTHOUSE & STEEL REDESIGN |

GRAPHIC SCALE

CONTRACTORS

| | |
|---|---|
| A/E CON. NO. | GS-04P-07-EX-C-0099 |
| A/E TASK NO. | |
| CONS. CONTR. | |
| CONS. WORK | |
| PRIME A/E | |
| SUB A/E | |
| CONSTR. CON. | |

BUILDING

| | |
|---|---|
| NAME | ARMED FORCES RETIREMENT HOME |
| STREET | 1800 BEACH DRIVE |
| CITY/ST./ZIP | GULFPORT, MS 39507 |
| BUILDING NO. | |
| OTHER BUILDING NOs. | |
| FACILITY CODE | |

PROJECT

| | |
|---|---|
| PROJECT TITLE | ARMED FORCES RETIREMENT HOME GULFPORT, MISSISSIPPI |
| PROJECT DESCRIPTION | NEW CONSTRUCTION |
| PROJECT NO. | 31942982 |
| GSA PM | STEVEN SMITH |
| SUBMISSION | ISSUED FOR CONSTRUCTION |
| SUB. DATE | 09/08/2008 |

DRAWING

| | |
|---|---|
| DRAWING TITLE | TYPICAL PENTHOUSE ROOF FRAMING PLAN |
| FILE NAME | S-181-N0095730.DWG |
| FLOOR NO. | PENTHOUSE ROOF |
| DRAWN BY | JVS DATE DRAFTED: |
| CHECKED BY | MWZ SHEET SIZE: 34 X 44 |
| DRAWING NO. | 26 S 1 81 |

DISCIPLINE SHEET TYPE SEQUENCE

SHEET 000 OF 000

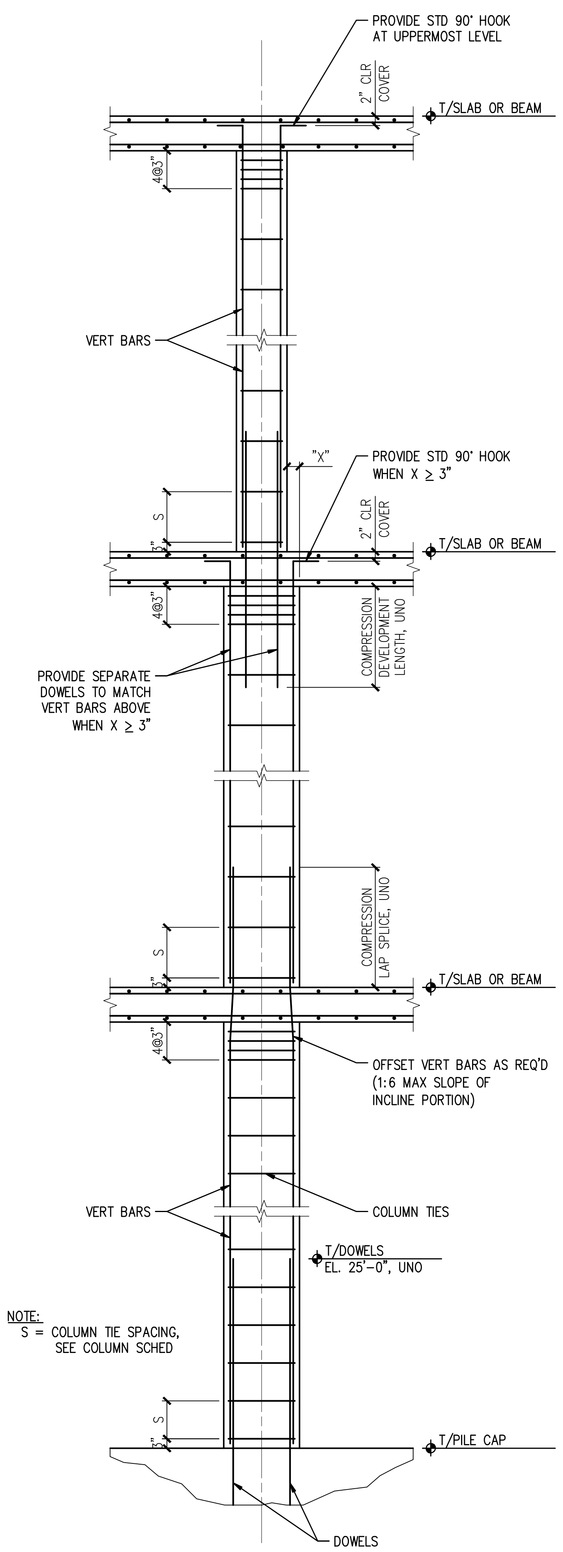


1 S501 **TYP COLUMN REINFORCEMENT**
N.T.S.

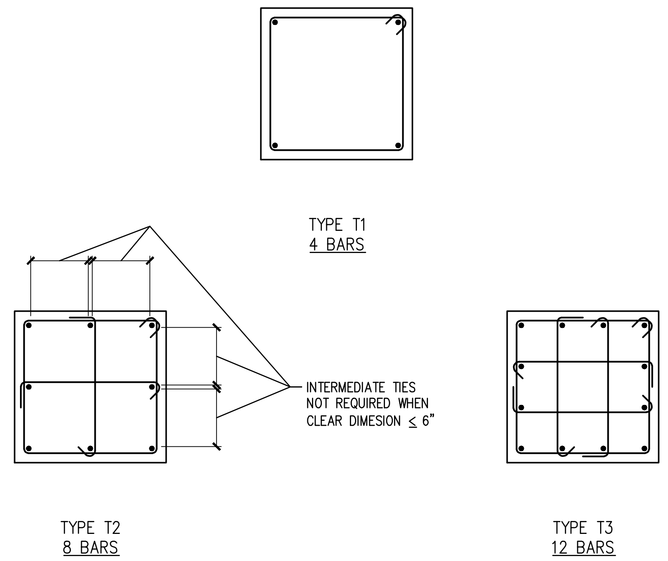


2 S501 **BAR & TIE ARRANGEMENT IN COLUMNS**
N.T.S.

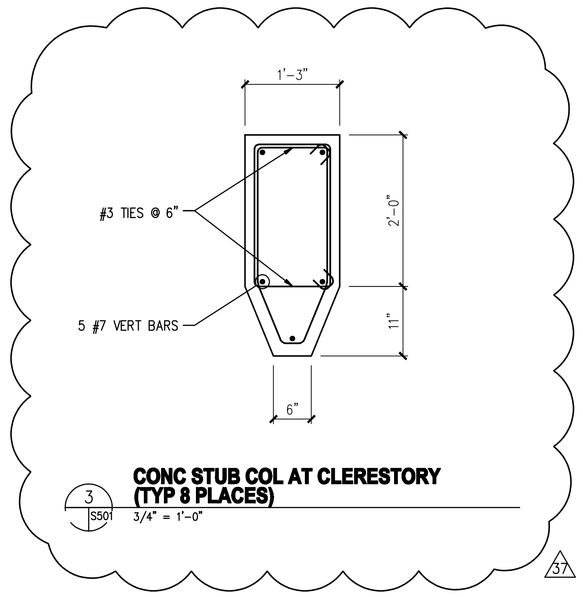


3 S501 **CONC STUB COL AT CLERESTORY (TYP 8 PLACES)**
3/4" = 1'-0"

37

| MINIMUM COMPRESSION LAP SPLICE LENGTH | |
|---|---|
| BAR SIZE | MINIMUM LAP LENGTH |
| | |
| #5 | 19" |
| #6 | 23" |
| #7 | 26" |
| #8 | 30" |
| #9 | 34" |
| #10 | 38" |
| #11 | 42" |
| | |
| | |

NOTE: VALUES BASED ON GRADE 60 BARS AND f'c ≥ 3000 PSI.

| MINIMUM COMPRESSION DEVELOPMENT LENGTH | | |
|---|---|---|
| BAR SIZE | f'c = 4000 PSI | f'c = 5000 PSI |
| | | |
| #5 | 12" | 12" |
| #6 | 15" | 14" |
| #7 | 17" | 16" |
| #8 | 19" | 18" |
| #9 | 22" | 21" |
| #10 | 25" | 23" |
| #11 | 27" | 26" |
| | | |
| | | |

NOTE: VALUES BASED ON GRADE 60 BARS.


GSA
GENERAL SERVICES ADMINISTRATION
77 FORSYTH STREET
SUITE 600
ATLANTA, GA 30303
TEL: (404)331-3200

AFRH The Premier Retirement Community for America's Veterans
JE JACOBS
PROJECT MANAGEMENT CONSULTANT TO THE GENERAL SERVICES ADMINISTRATION

YATES CONSTRUCTION

SFCS Architecture Engineering Planning Interiors

URS
URS CORPORATION
2020 K ST, NW
SUITE 300
WASHINGTON D.C. 20006


ISSUED FOR CONSTRUCTION

CERTIFICATIONS

DISTRICT OF COLUMBIA
MARK W. ZIMPELMAN
8572
REGISTERED
PROFESSIONAL ENGINEER
09/08/08

KEY PLAN

REVISION NOTES

| MARK | DATE | DESCRIPTION |
|---|---|---|
| 2 | 02/27/08 | ADD COLUMN REINF AND DETAILS |
| | 02/27/08 | ISSUED FOR CONSTRUCTION |
| 37 | 09/08/08 | RE-ISSUED FOR CONSTRUCTION |

GRAPHIC SCALE

CONTRACTORS

| | |
|---|---|
| A/E CON. NO. | GS-04P-07-EX-C-0099 |
| A/E TASK NO. | |
| CONS. CONTR. | |
| CONS. WORK | |
| PRIME A/E | |
| SUB A/E | |
| CONSTR. CON. | |

BUILDING

| | |
|---|---|
| NAME | ARMED FORCES RETIREMENT HOME |
| STREET | 1800 BEACH DRIVE |
| CITY/ST./ZIP | GULFPORT, MS 39507 |
| BUILDING NO. | |
| OTHER BUILDING NOs. | |
| FACILITY CODE | |

PROJECT

| | |
|---|---|
| PROJECT TITLE | ARMED FORCES RETIREMENT HOME GULFPORT, MISSISSIPPI |
| PROJECT DESCRIPTION | NEW CONSTRUCTION |
| PROJECT NO. | 31942982 |
| GSA PM | STEVEN SMITH |
| SUBMISSION | ISSUED FOR CONSTRUCTION |
| SUB. DATE | 09/08/2008 |

DRAWING

| | |
|---|---|
| DRAWING TITLE | CONCRETE COLUMN DETAILS |
| FILE NAME | S-501-N0095730.DWG |
| FLOOR NO. | 00 |
| DRAWN BY | JVS DATE DRAFTED: |
| CHECKED BY | MWZ SHEET SIZE: 34 X 44 |
| DRAWING NO. 2 | S 5 01 |
| | DISCIPLINE SHEET TYPE SEQUENCE |
| | SHEET 000 OF 000 |

PROPERTY OF THE UNITED STATES GOVERNMENT – FOR OFFICIAL USE ONLY. Do not remove this notice. Properly destroy documents when no longer needed.

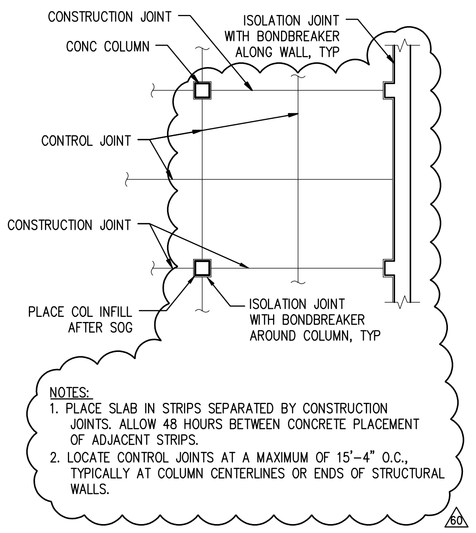


1 S511 **TYP SOG JOINT PATTERN**
N.T.S.

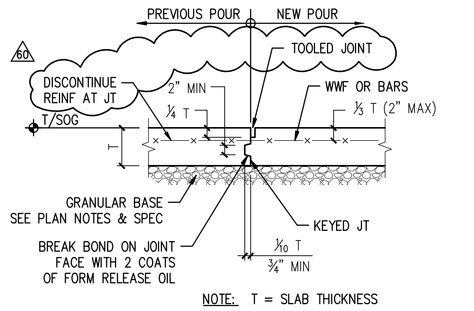


2 S511 **TYP SOG CONSTRUCTION JOINT DETAIL**
N.T.S.

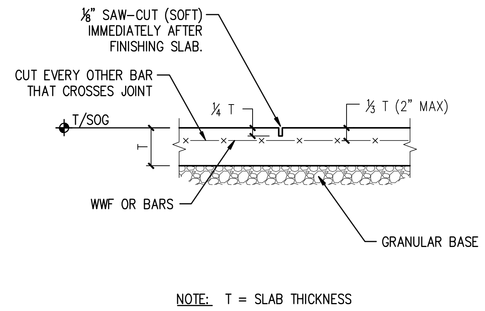


3 S511 **TYP SOG CONTROL JOINT DETAIL**
N.T.S.

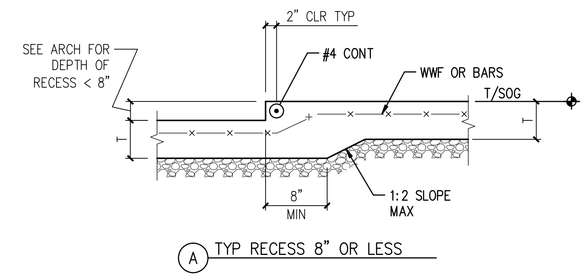


4 S511 **TYP SOG RECESS DETAIL**
N.T.S.

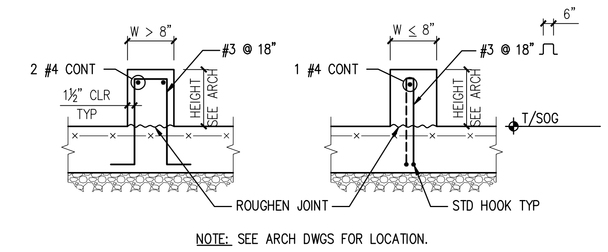


5 S511 **TYP CONCRETE CURB DETAILS**
N.T.S.

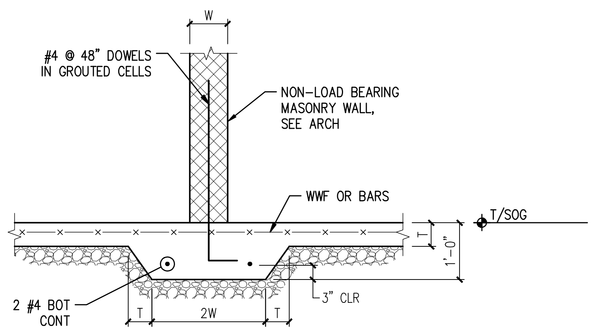


6 S511 **TYP THICKENED SLAB DETAIL UNDER NON-LOAD BEARING MASONRY WALL**
N.T.S.

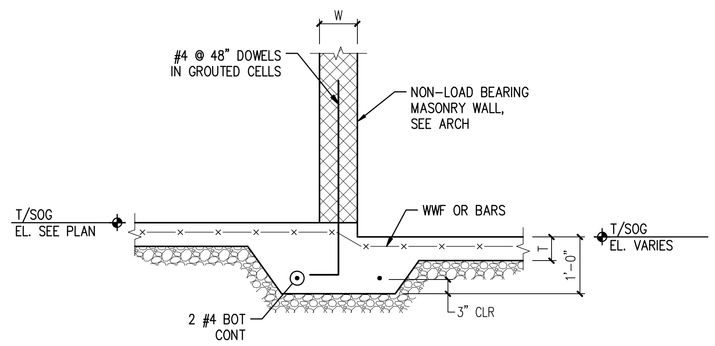


7 S511 **SECTION**
3/4" = 1'-0"

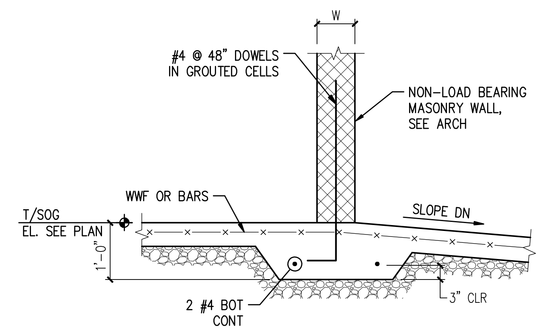


8 S511 **SECTION**
3/4" = 1'-0"

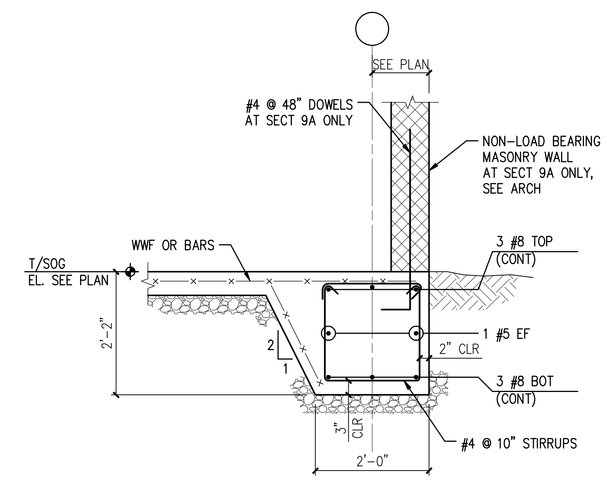


9A S511 9 S511 **SECTION**
3/4" = 1'-0"

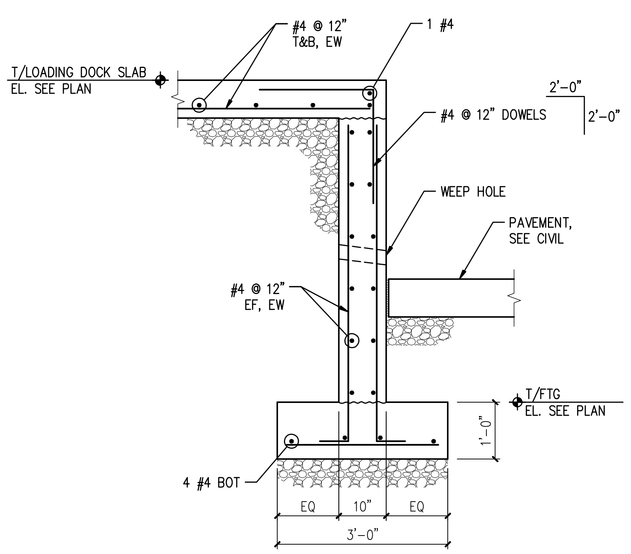


10 S511 **SECTION**
3/4" = 1'-0"

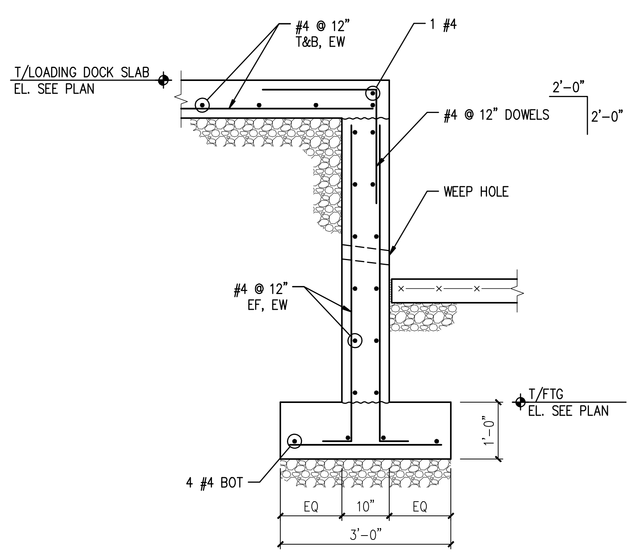


11 S511 **SECTION**
3/4" = 1'-0"

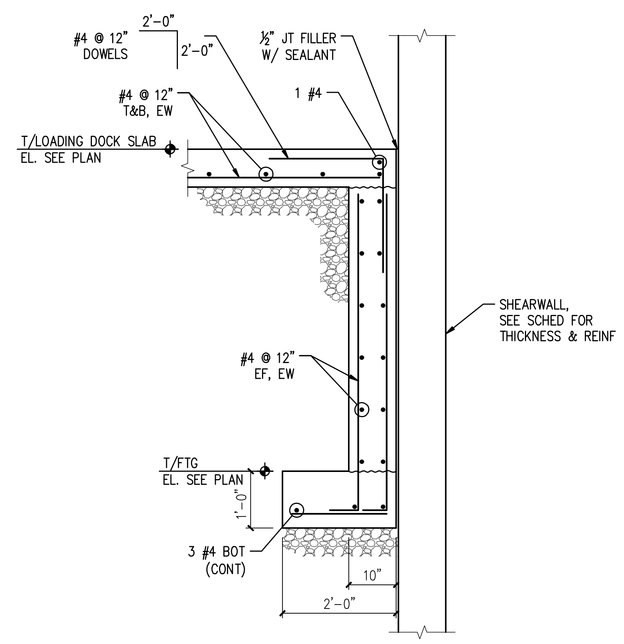


12 S511 **SECTION**
3/4" = 1'-0"

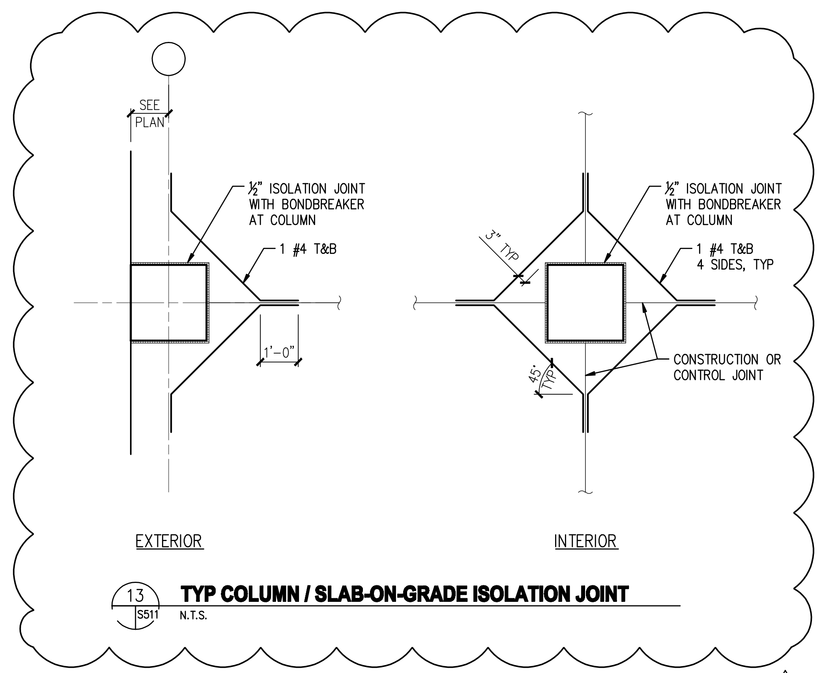


13 S511 **TYP COLUMN / SLAB-ON-GRADE ISOLATION JOINT**
N.T.S.

PROPERTY OF THE UNITED STATES GOVERNMENT – FOR OFFICIAL USE ONLY. Do not remove this notice. Properly destroy documents when no longer needed.

GSA
GENERAL SERVICES ADMINISTRATION
77 FORSYTH STREET
SUITE 600
ATLANTA, GA 30303
TEL: (404)331-3200

AFRH The Premier Retirement Community for America's Veterans
JE JACOBS
PROJECT MANAGEMENT CONSULTANT TO THE GENERAL SERVICES ADMINISTRATION

YATES CONSTRUCTION

SFCS Architecture Engineering Planning Interiors

URS
URS CORPORATION
2020 K ST, NW
SUITE 300
WASHINGTON D.C. 20006

ISSUED FOR CONSTRUCTION

CERTIFICATIONS
DISTRICT OF COLUMBIA MARK W. ZIMPFLEAN 8572 REGISTERED PROFESSIONAL ENGINEER
12/02/08

KEY PLAN

REVISION NOTES

| MARK | DATE | DESCRIPTION |
|---|---|---|
| 59 | 09/08/08 | ISSUED FOR CONSTRUCTION |
| 60 | 12/02/08 | CIVIL, STRUCT, ARCH REV |

GRAPHIC SCALE

| | |
|---|---|
| A/E CON. NO. | GS-04P-07-EX-C-0099 |
| A/E TASK NO. | |
| CONS. CONTR. | |
| CONS. WORK | |
| PRIME A/E | |
| SUB A/E | |
| CONSTR. CON. | |
| NAME | ARMED FORCES RETIREMENT HOME |
| STREET | 1800 BEACH DRIVE |
| CITY/ST./ZIP | GULFPORT, MS 39507 |
| BUILDING NO. | |
| OTHER BUILDING NOs. | |
| FACILITY CODE | |
| PROJECT TITLE | ARMED FORCES RETIREMENT HOME GULFPORT, MISSISSIPPI |
| PROJECT DESCRIPTION | NEW CONSTRUCTION |
| PROJECT NO. | 31942982 |
| GSA PM | STEVEN SMITH |
| SUBMISSION | ISSUED FOR CONSTRUCTION |
| SUB. DATE | 09/08/2008 |
| DRAWING TITLE | SLAB-ON-GRADE TYPICAL DETAILS |
| FILE NAME | S-511-N0095730.DWG |
| FLOOR NO. | 00 |
| DRAWN BY | JVS DATE DRAFTED: |
| CHECKED BY | MWZ SHEET SIZE: 34 X 44 |
| DRAWING NO. | 57 S 5 11 (DISCIPLINE SHEET TYPE SEQUENCE) |
| | SHEET 000 OF 000 |

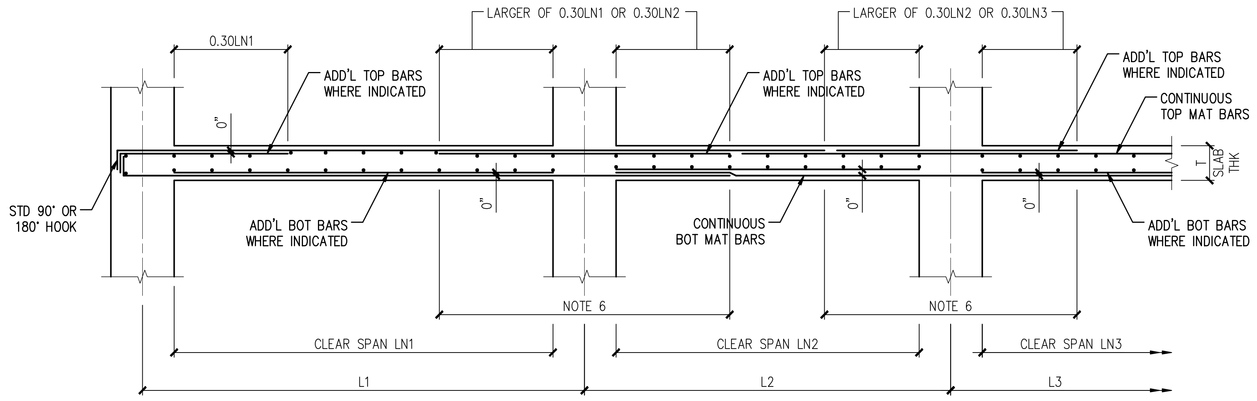


NOTES:

1. SEE PLAN NOTES FOR SLAB THICKNESS, REINFORCING REQUIREMENTS AND BAR PLACING SEQUENCE.
2. SEE PLAN FOR ADDITIONAL T (TOP) BARS AND B (BOTTOM) BARS, IF ANY.
3. CENTER ALL ADDITIONAL TOP BARS AND BOTTOM BARS OVER LINE CONNECTING COLUMN CENTERLINES (SKEW WHERE NEEDED).
4. PLACE FIRST ADDITIONAL BAR AT COLUMN CENTERLINE (OR IF UNIFORMLY SPACED CONTINUOUS MAT BAR IS ON CENTERLINE THEN PLACE ADDITIONAL BARS ON EACH SIDE BETWEEN MAT BARS). PLACE REMAINDER OF ADDITIONAL BARS BETWEEN MAT BARS WITHIN COLUMN STRIP.
5. LOCATE AT LEAST TWO BOTTOM MAT BARS WITHIN COLUMN AND HOOK AT EXTERIOR COLUMNS.
6. TENSION LAP SPLICES ARE PERMITTED IN THIS REGION.
7. TURN HOOK AS REQUIRED TO FIT INTO SLAB DEPTH.

1 S521 **TYP TWO-WAY FLAT SLAB DETAIL**
N.T.S.

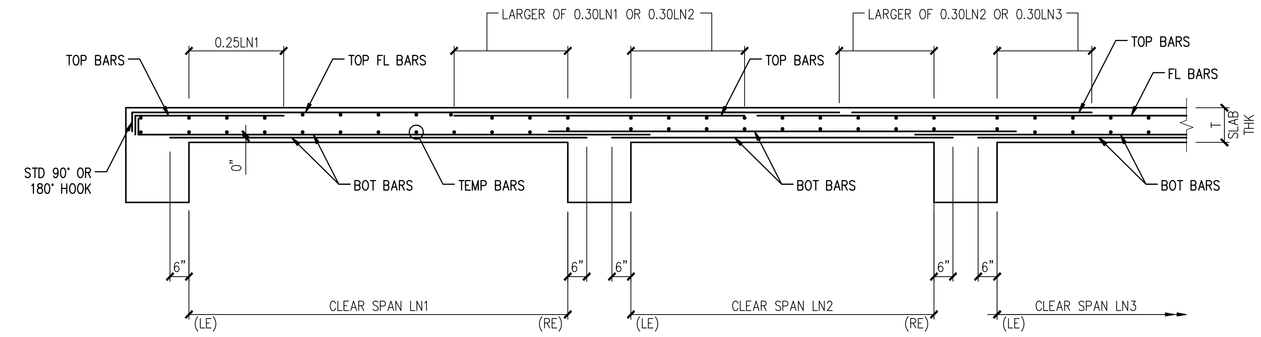


NOTES:

1. SEE SLAB SCHEDULE S611 FOR SLAB THICKNESS AND REINFORCING.
2. PROVIDE THE LARGER AMOUNT OF TOP LE OR RE BARS AT COMMON SUPPORT FOR ADJACENT SPANS.
3. LOCATE AT LEAST TWO BOTTOM BARS WITHIN COLUMN AND HOOK AT EXTERIOR COLUMNS.
4. PROVIDE CONTINUOUS BOTTOM BARS WHERE INDICATED IN SLAB SCHEDULE.
5. PROVIDE TEMPERATURE REINFORCING TRANSVERSE TO SCHEDULED REINFORCING.
6. TURN HOOK AS REQUIRED TO FIT INTO SLAB DEPTH.

2 S521 **TYP ONE-WAY SLAB DETAIL**
N.T.S.

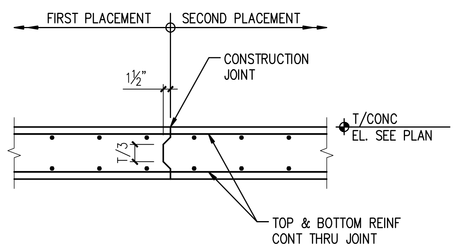


NOTES:

1. SEE GENERAL NOTES FOR ADDITIONAL INFORMATION.
2. THIS DETAIL APPLIES TO TWO-WAY & ONE-WAY SLABS AND BEAMS.
3. AT CONSTRUCTION JOINTS, PREPARE JOINT FACE OF FIRST FRAMED SECTION PRIOR TO PLACEMENT OF SECOND FRAMED SECTION.
4. WHERE NO TOP FULL LENGTH BARS OCCUR, PROVIDE #4 x 3'-4" LG @ 12"; CENTER BARS OVER CONSTRUCTION JOINT.
5. SUBMIT CONSTRUCTION JOINT LOCATION PLAN TO THE ARCHITECT FOR REVIEW.

3 S521 **TYP FRAMED SLAB CONSTRUCTION JOINT DETAIL**
N.T.S.

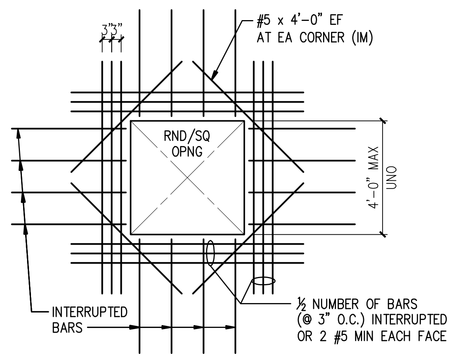


NOTE:
ALL OPENINGS IN THE FLOOR SLAB SHALL BE EITHER FORMED OR PROVIDED WITH PIPE SLEEVES BEFORE PLACING CONCRETE. NO OPENINGS SHALL BE DRILLED WITHOUT THE WRITTEN PERMISSION OF THE ARCHITECT.

4 S521 **TYP OPENING IN CONCRETE SLAB DETAIL**
N.T.S.

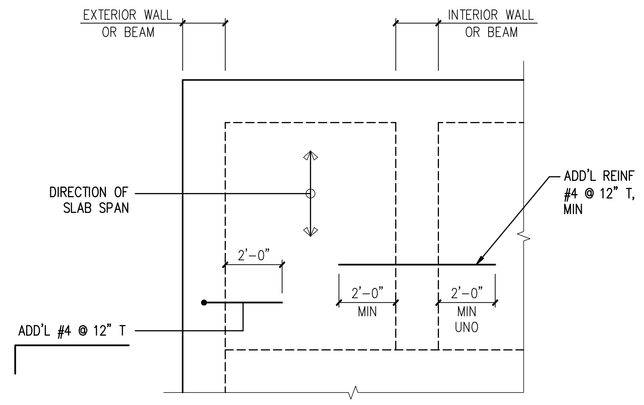


5 S521 **ADDITIONAL ONE-WAY SLAB REINFORCING PERPENDICULAR TO MAIN REINFORCEMENT**
N.T.S.

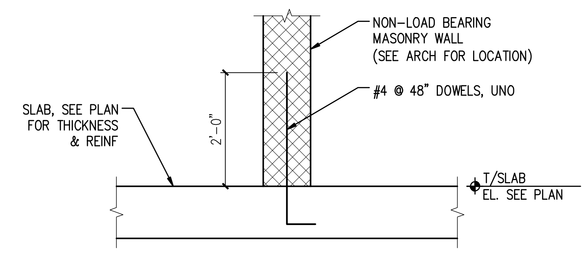


6 S521 **TYP DETAIL AT NON-LOAD BEARING CMU WALL**
3/4" = 1'-0"

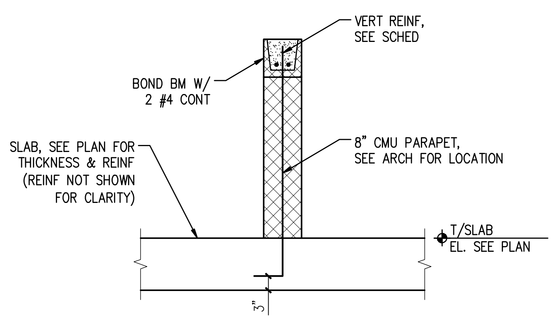


| MASONRY PARAPET REINF SCHEDULE | | | |
|---|---|---|---|
| LEVEL | PARAPET HT | VERT REINF | REMARKS |
| | | | |
| LEVEL 2 | ≤ 32" | #4 @ 48" MID | |
| LEVEL 2 | ≤ 40" | #4 @ 40" MID | |
| LEVEL 2 | ≤ 48" | #4 @ 24" MID | |
| | | | |
| MAIN ROOF | ≤ 32" | #4 @ 32" MID | |
| | | | |

NOTE: REFER TO ARCH DRAWINGS FOR LOCATION OF MASONRY PARAPETS.

7 S521 **TYP MASONRY PARAPET DETAIL**
3/4" =1 '-0"

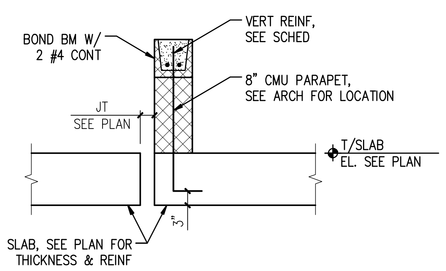


8 S521 **SECTION**
3/4" =1 '-0"

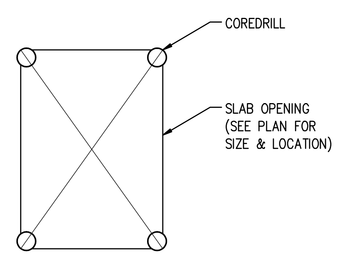


NOTES:

1. LOCATE EXISTING REBAR AND P-T TENDONS IN SLAB.
2. COORDINATE SIZE AND LOCATION OF OPENINGS WITH ARCH DRAWING.
3. COREDRILL FOUR 2" DIA HOLES AT CORNERS OF PROPOSED SLAB OPENING.
4. AFTER COREDRILLING, SAW CUT OPENINGS. DO NOT CUT PAST COREDRILLS.

9 S521 **NEW SLAB OPENINGS IN EXISTING SLAB**
N.T.S.

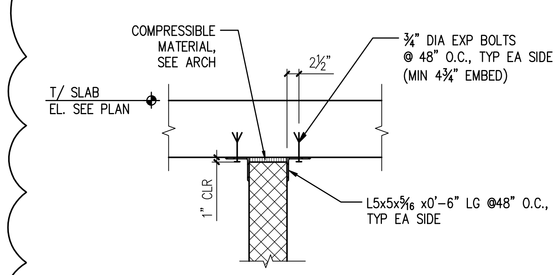


NOTE: ANGLES NOT REQUIRED WHERE INTERIOR CROSSWALLS PROVIDE LATERAL SUPPORT AT LESS THAN OR EQUAL TO 18'-0" O.C. FOR 8" CMU WALLS.

10 S521 **TYP TOP LATERAL SUPPORT OF NON - LOAD BEARING MASONRY WALL**
3/4" =1 '-0"

57

59

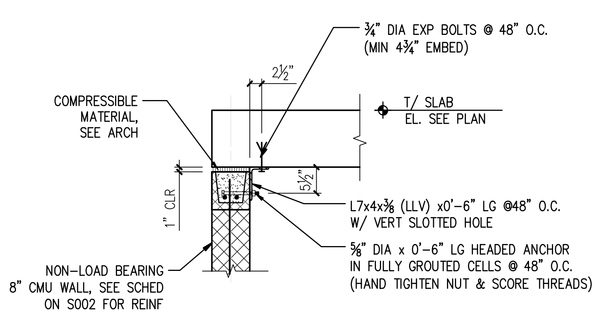


11 S521 **TYP TOP LATERAL SUPPORT OF EXTERIOR NON - LOAD BEARING MASONRY WALL**
3/4" =1 '-0"

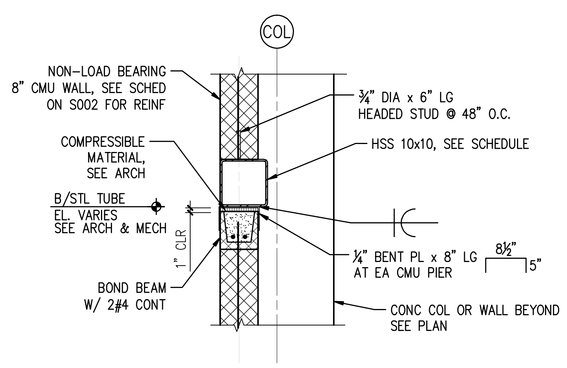


12 S521 **TYP CMU WALL TO HSS TUBE CONN AT LOUVERS**
3/4" =1 '-0"

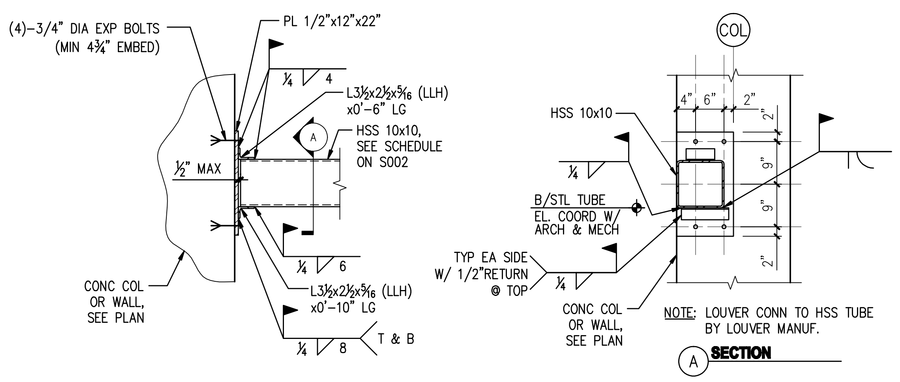


13 S521 **TYP CONN OF HSS TUBE (LOUVER SUPPORT ) TO ADJACENT CONCRETE COL / WALL**
3/4" =1 '-0"

60

PROPERTY OF THE UNITED STATES GOVERNMENT – FOR OFFICIAL USE ONLY. Do not remove this notice. Properly destroy documents when no longer needed.

GENERAL SERVICES ADMINISTRATION
77 FORSYTH STREET
SUITE 600
ATLANTA, GA 30303
TEL: (404)331-3200

AFRH The Premier Retirement Community for America's Veterans
JACOBS PROJECT MANAGEMENT CONSULTANT TO THE GENERAL SERVICES ADMINISTRATION
YATES CONSTRUCTION
SFCS Architecture Engineering Planning Interiors
URS CORPORATION
2020 K ST, NW
SUITE 300
WASHINGTON D.C. 20006

ISSUED FOR CONSTRUCTION

CERTIFICATIONS

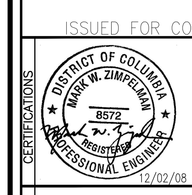


KEY PLAN

REVISION NOTES

| MARK | DATE | DESCRIPTION |
|---|---|---|
| 8 | 03/25/08 | FIRST FLOOR SLAB SUBMISSION |
| | 03/25/08 | ISSUED FOR CONSTRUCTION |
| 57 | 09/08/08 | RE-ISSUED FOR CONSTRUCTION |
| 59 | 10/31/08 | REVISE SLAB OPENINGS |
| 60 | 12/02/08 | CIVIL, STRUCT, ARCH REV. |

GRAPHIC SCALE

CONTRACTORS

| | |
|---|---|
| A/E CON. NO. | GS-04P-07-EX-C-0099 |
| A/E TASK NO. | |
| CONS. CONTR. | |
| CONS. WORK | |
| PRIME A/E | |
| SUB A/E | |
| CONSTR. CON. | |

BUILDING

| | |
|---|---|
| NAME | ARMED FORCES RETIREMENT HOME |
| STREET | 1800 BEACH DRIVE |
| CITY/ST./ZIP | GULFPORT, MS 39507 |
| BUILDING NO. | |
| OTHER | |
| BUILDING NOs. | |
| FACILITY CODE | |

PROJECT

| | |
|---|---|
| PROJECT TITLE | ARMED FORCES RETIREMENT HOME GULFPORT, MISSISSIPPI |
| PROJECT DESCRIPTION | NEW CONSTRUCTION |
| PROJECT NO. | 31942982 |
| GSA PM | STEVEN SMITH |
| SUBMISSION | ISSUED FOR CONSTRUCTION |
| SUB. DATE | 09/08/2008 |

DRAWING

| | |
|---|---|
| DRAWING TITLE | SLAB TYPICAL DETAILS |
| FILE NAME | S-521-N0095730.DWG |
| FLOOR NO. | 00 |
| DRAWN BY | JVS DATE DRAFTED: |
| CHECKED BY | MWZ SHEET SIZE: 34 X 44 |
| DRAWING NO. 8 | S 5 21 |
| | DISCIPLINE SHEET TYPE SEQUENCE |
| | SHEET 000 OF 000 |

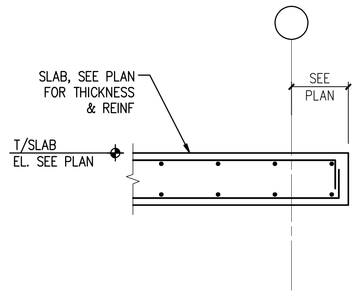


1 S522 **SECTION** 3/4" = 1'-0"

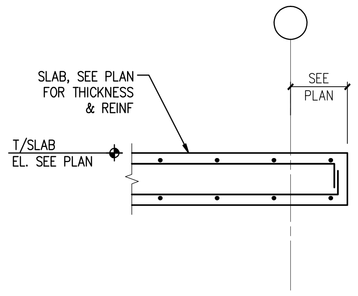


2 S522 **SECTION** 3/4" = 1'-0"

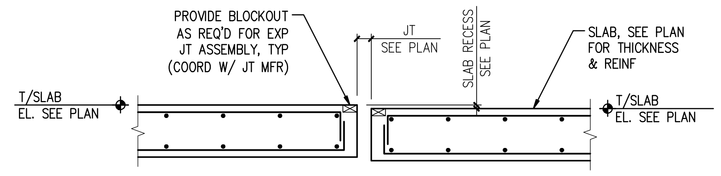


3 S522 **SECTION** 3/4" = 1'-0"

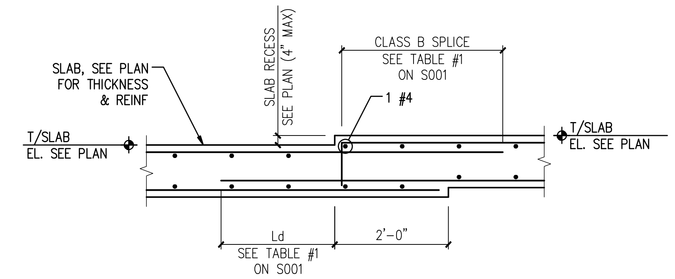


4 S522 **SECTION** 3/4" = 1'-0"

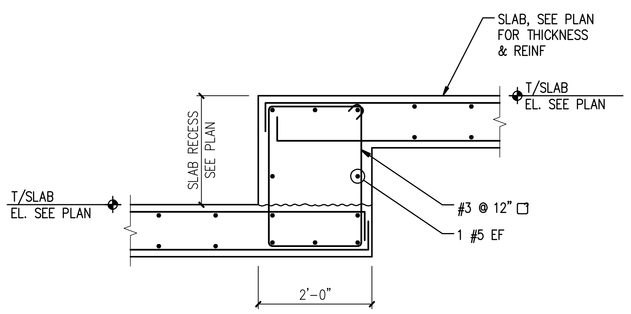


5 S522 **SECTION** 3/4" = 1'-0"

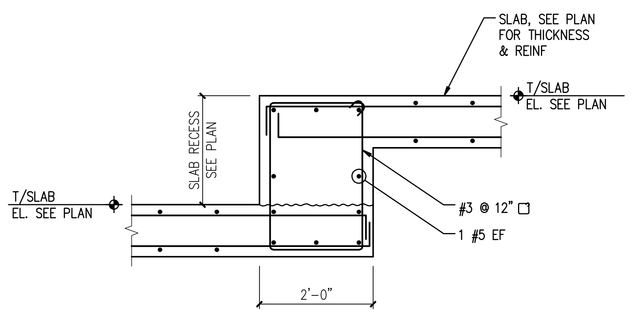


6 S522 **SECTION** 3/4" = 1'-0"

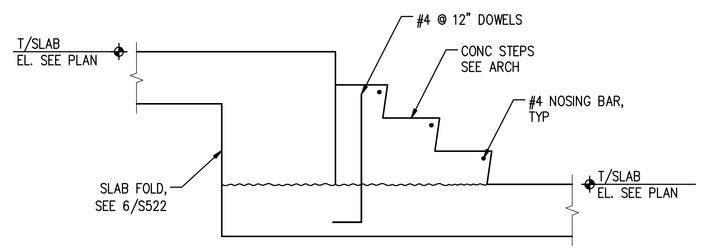


7 S522 **SECTION** 3/4" = 1'-0"

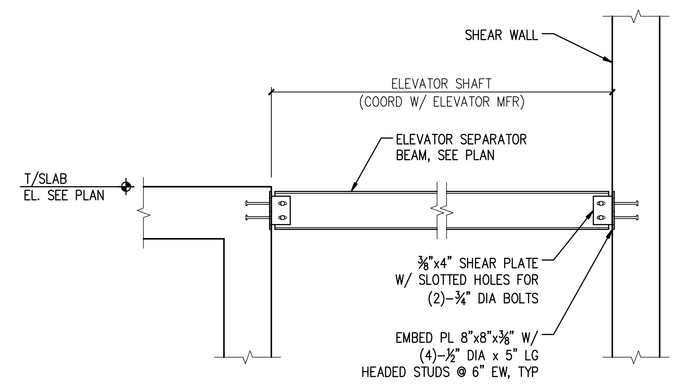


8 S522 **SECTION** 3/4" = 1'-0"

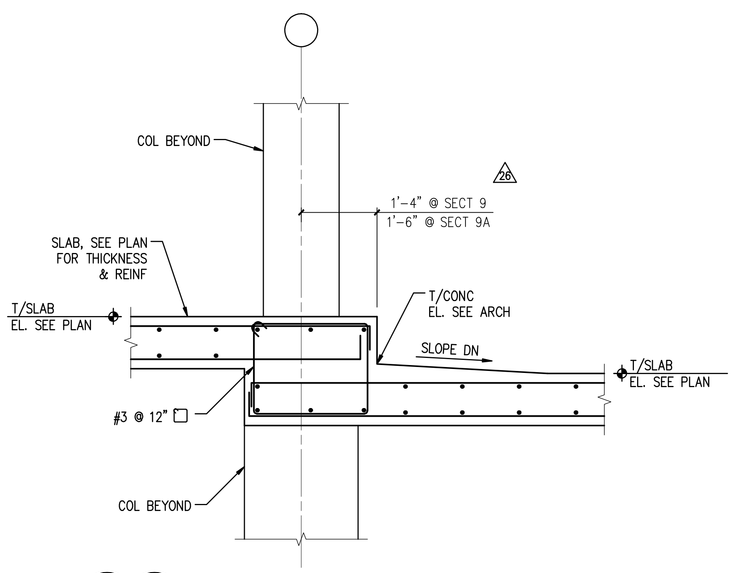


9A 9 S522 S522 **SECTION** 3/4" = 1'-0"

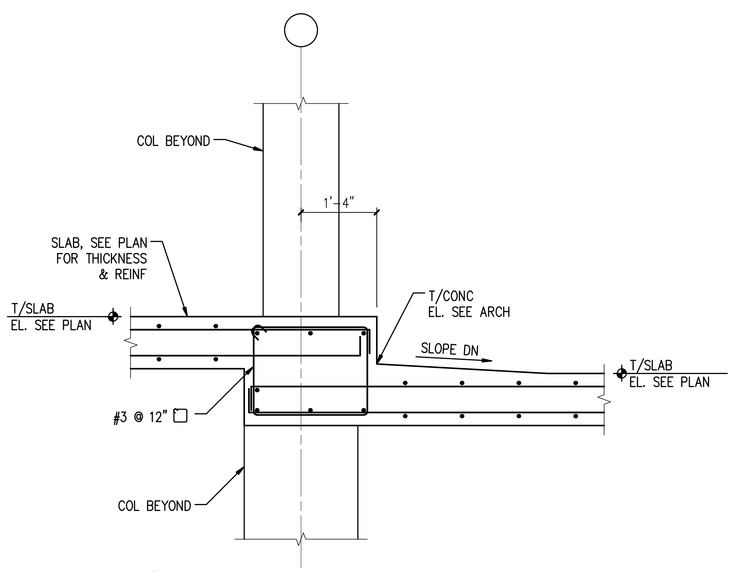


10 S522 **SECTION** 3/4" = 1'-0"

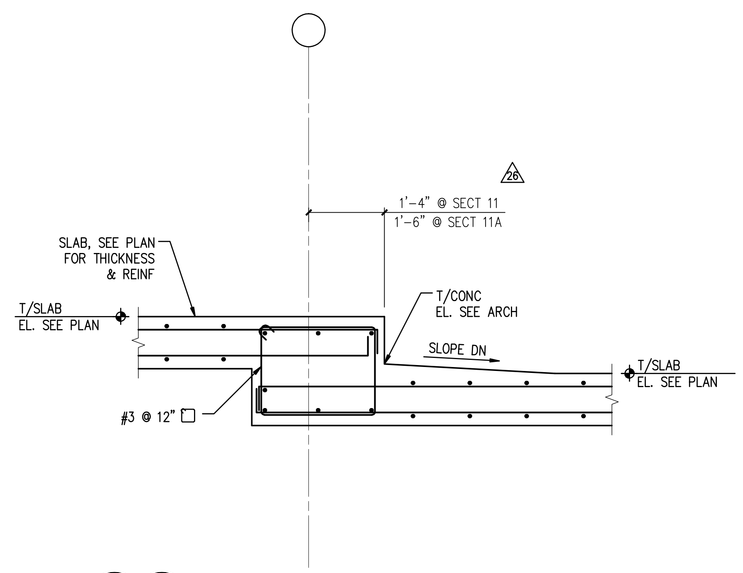


11A 11 S522 S522 **SECTION** 3/4" = 1'-0"

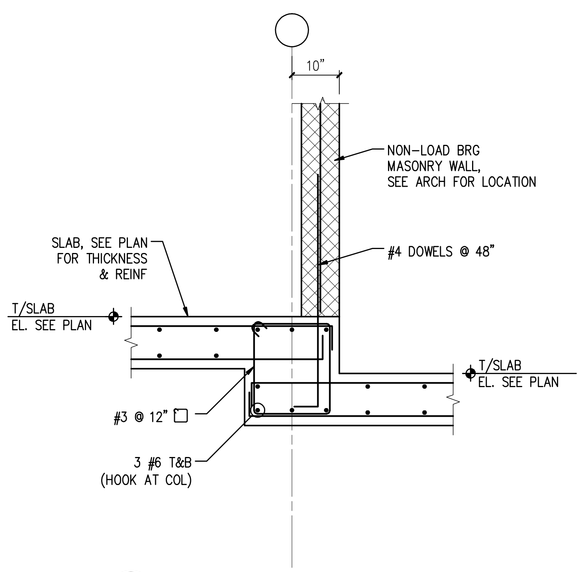


12 S522 **SECTION** 3/4" = 1'-0"

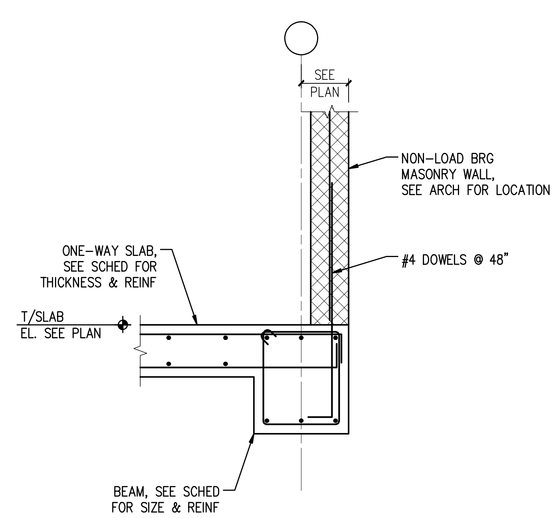


13 S522 **SECTION** 3/4" = 1'-0"

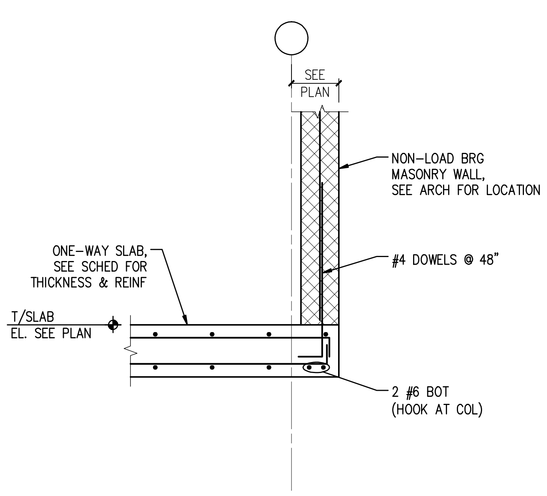


14 S522 **SECTION** 3/4" = 1'-0"

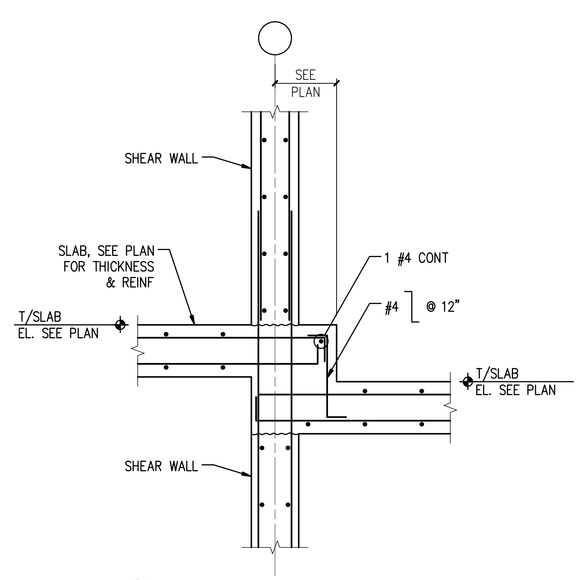


15 S522 **SECTION** 3/4" = 1'-0"

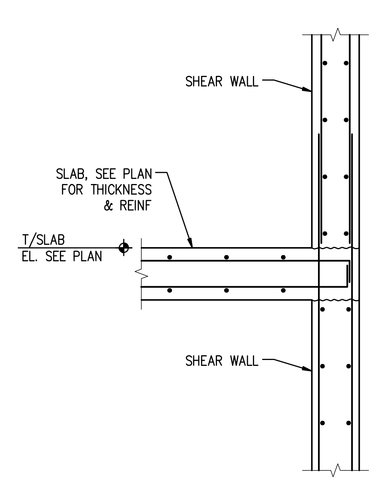


16 S522 **SECTION** 3/4" = 1'-0"

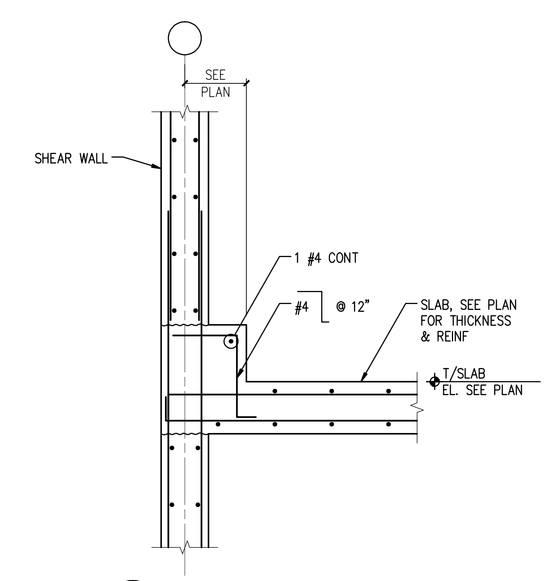


17 S522 **SECTION** 3/4" = 1'-0"

PROPERTY OF THE UNITED STATES GOVERNMENT – FOR OFFICIAL USE ONLY. Do not remove this notice. Properly destroy documents when no longer needed.

GENERAL SERVICES ADMINISTRATION
77 FORSYTH STREET
SUITE 600
ATLANTA, GA 30303
TEL: (404)331-3200

JACOBS
PROJECT MANAGEMENT CONSULTANT TO
THE GENERAL SERVICES ADMINISTRATION

YATES CONSTRUCTION

SFCS Architecture Engineering Planning Interiors

URS CORPORATION
2020 K ST, NW
SUITE 300
WASHINGTON D.C. 20006

ISSUED FOR CONSTRUCTION

CERTIFICATIONS

DISTRICT OF COLUMBIA
MARK W. ZIMPFERMAN
8572
REGISTERED
PROFESSIONAL ENGINEER
09/08/08

KEY PLAN

REVISION NOTES

| MARK | DATE | DESCRIPTION |
|---|---|---|
| 6 | 03/25/08 | FIRST FLOOR SLAB SUBMISSION |
| | 03/25/08 | ISSUED FOR CONSTRUCTION |
| 18 | 05/09/08 | LEVEL 2 SLAB – PENETRATIONS |
| 26 | 06/20/08 | PENTHOUSE, PH ROOF & PAV D SLABS |
| 7 | 09/08/08 | RE-ISSUED FOR CONSTRUCTION |

GRAPHIC SCALE

CONTRACTORS

| | |
|---|---|
| A/E CON. NO. | GS-04P-07-EX-C-0099 |
| A/E TASK NO. | |
| CONS. CONTR. | |
| CONS. WORK | |
| PRIME A/E | |
| SUB A/E | |
| CONSTR. CON. | |

BUILDING

| | |
|---|---|
| NAME | ARMED FORCES RETIREMENT HOME |
| STREET | 1800 BEACH DRIVE |
| CITY/ST./ZIP | GULFPORT, MS 39507 |
| BUILDING NO. | |
| OTHER BUILDING NOs. | |
| FACILITY CODE | |

PROJECT

| | |
|---|---|
| PROJECT TITLE | ARMED FORCES RETIREMENT HOME GULFPORT, MISSISSIPPI |
| PROJECT DESCRIPTION | NEW CONSTRUCTION |
| PROJECT NO. | 31942982 |
| GSA PM | STEVEN SMITH |
| SUBMISSION | ISSUED FOR CONSTRUCTION |
| SUB. DATE | 09/08/2008 |

DRAWING

| | |
|---|---|
| DRAWING TITLE | CONCRETE SECTIONS & DETAILS |
| FILE NAME | S-522-N0095730.DWG |
| FLOOR NO. | 00 |
| DRAWN BY | JVS DATE DRAFTED: |
| CHECKED BY | MWZ SHEET SIZE: 34 X 44 |
| DRAWING NO. | 8 S 5 22 |
| | DISCIPLINE SHEET TYPE SEQUENCE |
| | SHEET 000 OF 000 |

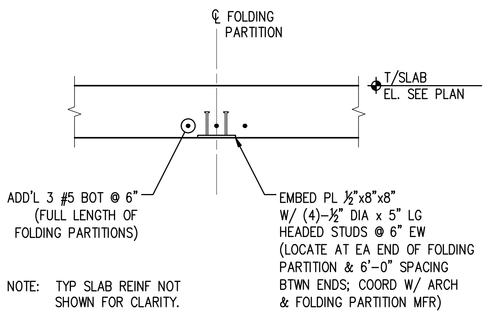


1 S523 **SECTION** 3/4" = 1'-0"

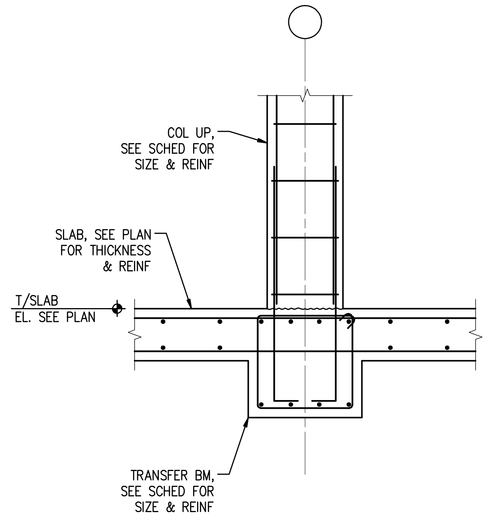


2 S523 **SECTION** 3/4" = 1'-0"

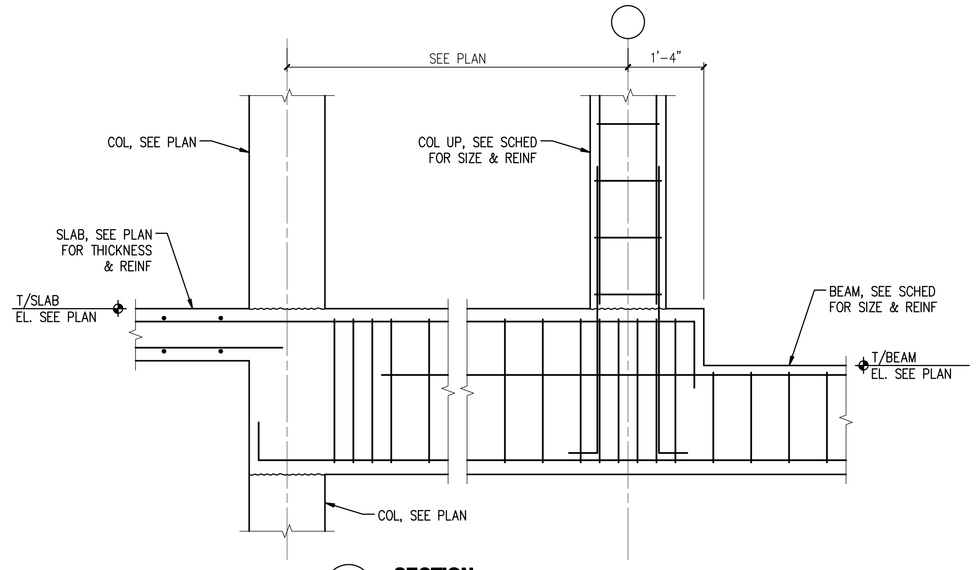


3 S523 **SECTION** 3/4" = 1'-0"

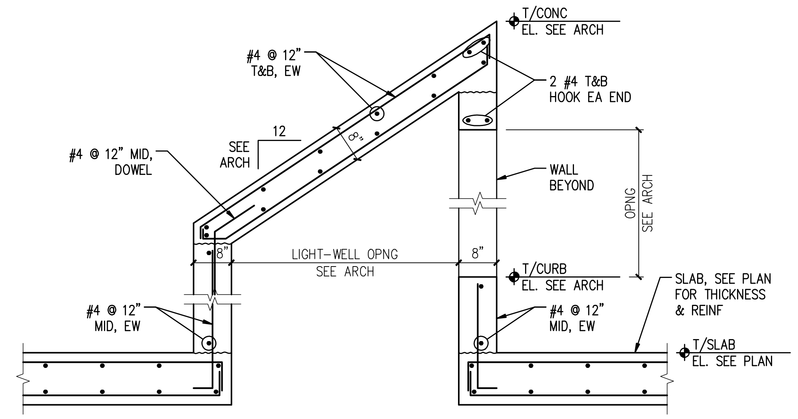


4 S523 **SECTION** 3/4" = 1'-0"

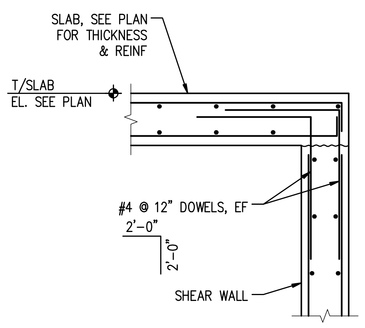


5 S523 **SECTION** 3/4" = 1'-0"

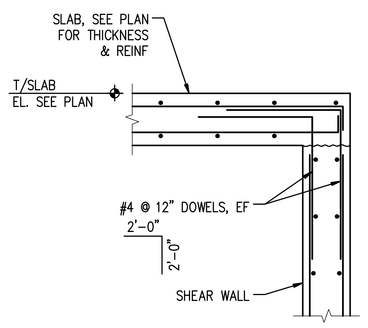


6 S523 **SECTION** 3/4" = 1'-0"

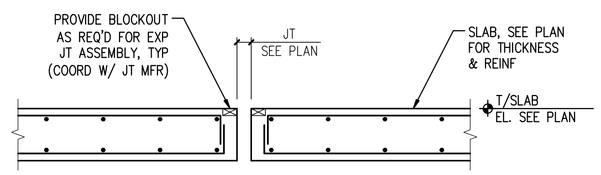


7 S523 **SECTION** 3/4" = 1'-0"

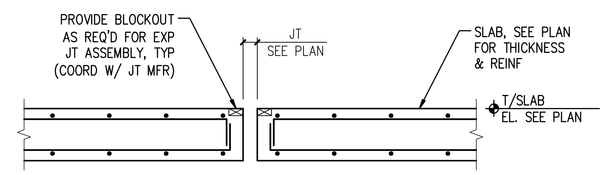


8 S523 **SECTION** 3/4" = 1'-0"

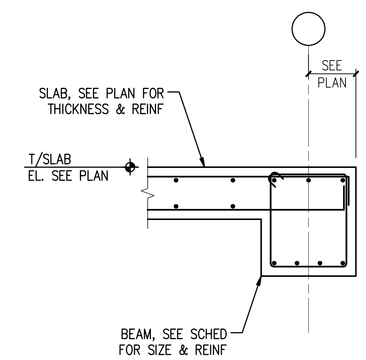


9 S523 **SECTION** 3/4" = 1'-0"

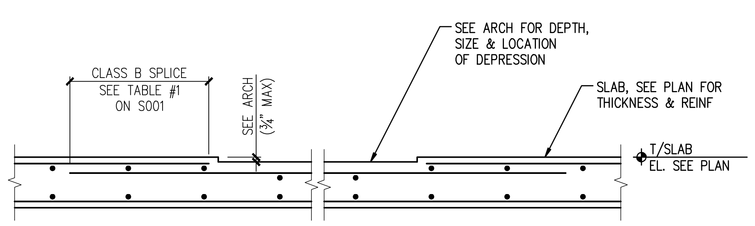


10 S523 **SLAB DEPRESSION DETAIL** 1" = 1'-0"

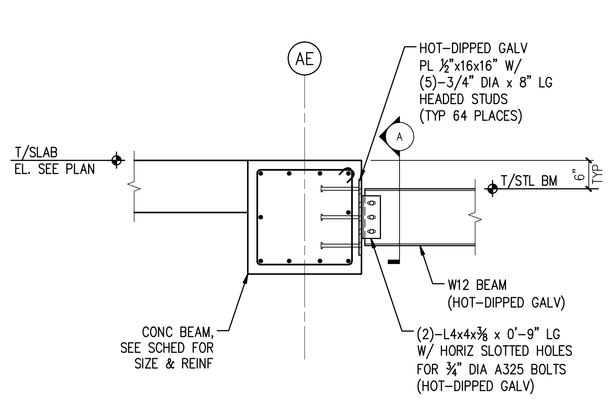


11 S523 **SECTION** 3/4" = 1'-0"

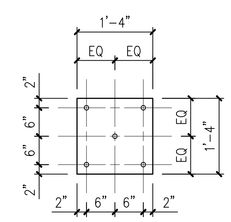


A **EMBED PLATE DETAIL AT EXTERIOR MECH AREA**

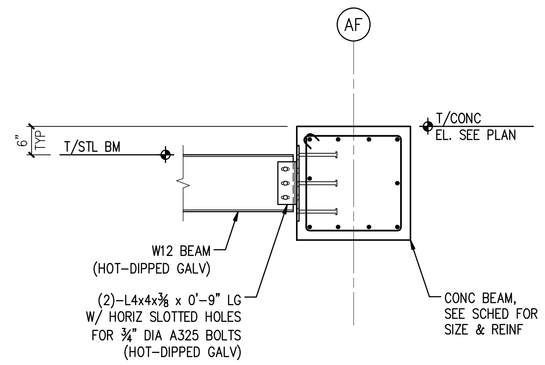


12 S523 **SECTION** 3/4" = 1'-0"

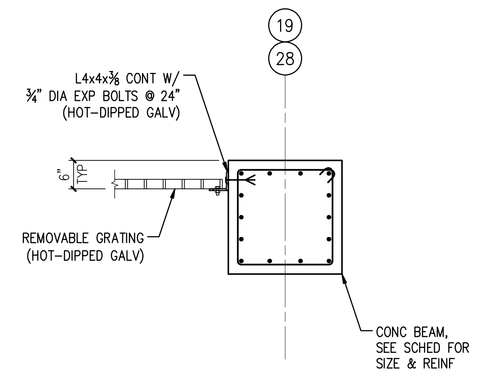


13 S523 **SECTION** 3/4" = 1'-0"

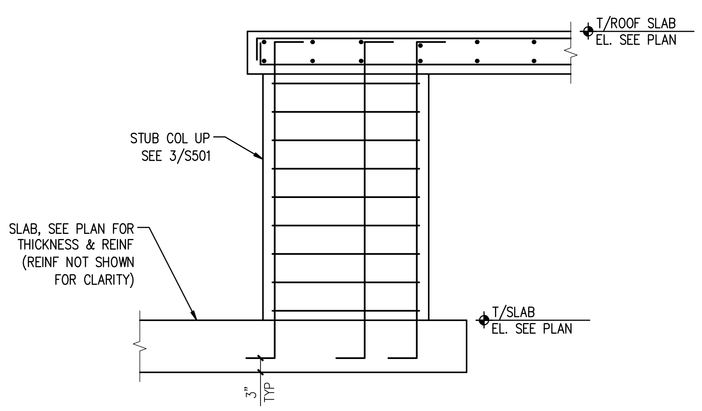


14 S523 **SECTION** 3/4" = 1'-0"

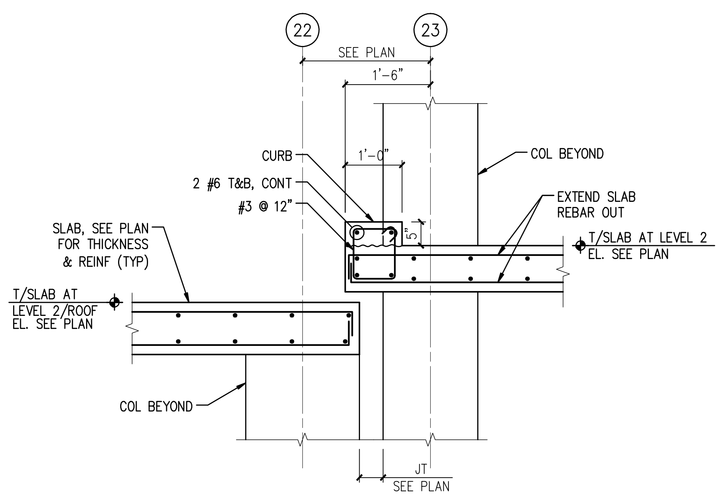


15 S523 **SECTION** 3/4" = 1'-0"

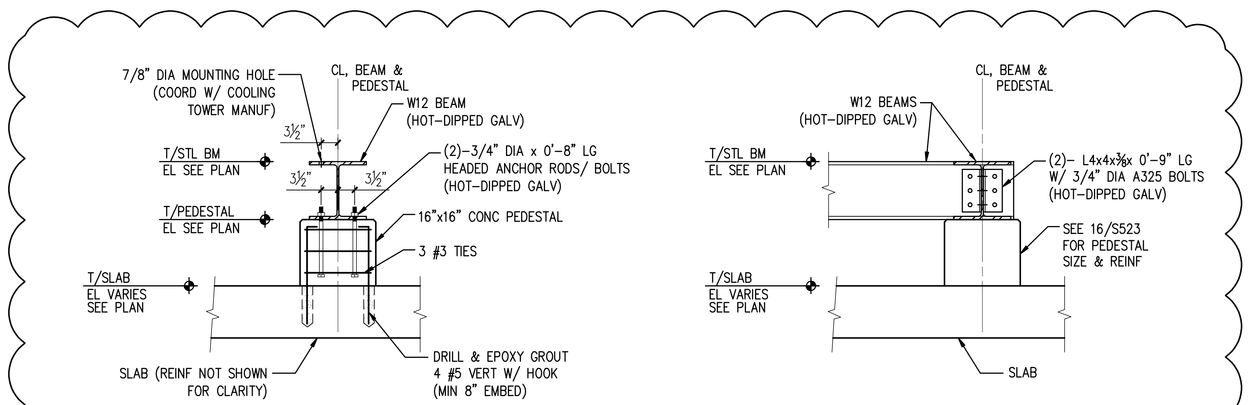


16 S523 **SECTION** 3/4" = 1'-0"

17 S523 **SECTION** 3/4" = 1'-0"

PROPERTY OF THE UNITED STATES GOVERNMENT – FOR OFFICIAL USE ONLY. Do not remove this notice. Properly destroy documents when no longer needed.

GENERAL SERVICES ADMINISTRATION
77 FORSYTH STREET
SUITE 600
ATLANTA, GA 30303
TEL: (404)331-3200

JACOBS
PROJECT MANAGEMENT CONSULTANT TO THE GENERAL SERVICES ADMINISTRATION

YATES CONSTRUCTION

SFCS Architecture Engineering Planning Interiors

URS CORPORATION
2020 K ST, NW
SUITE 300
WASHINGTON D.C. 20006

ISSUED FOR CONSTRUCTION

CERTIFICATIONS

DISTRICT OF COLUMBIA — MARK W. ZIMPELMAN — 8572 — REGISTERED PROFESSIONAL ENGINEER — 12/02/08

KEY PLAN

REVISION NOTES

| MARK | DATE | DESCRIPTION |
|---|---|---|
| 18 | 05/09/08 | LEVEL 2 SLAB – PENETRATIONS |
| | 05/09/08 | ISSUED FOR CONSTRUCTION |
| 20 | 06/20/08 | PENTHOUSE, PH ROOF & PW D SLABS |
| 27 | 09/08/08 | RE-ISSUED FOR CONSTRUCTION |
| 43 | 09/24/08 | REVISION TO LEVEL 3 CONNECTOR |
| 60 | 12/02/08 | CIVIL, STRUCT, ARCH REV |

GRAPHIC SCALE

CONTRACTORS

| | |
|---|---|
| A/E CON. NO. | GS-04P-07-EX-C-0099 |
| A/E TASK NO. | |
| CONS. CONTR. | |
| CONS. WORK | |
| PRIME A/E | |
| SUB A/E | |
| CONSTR. CON. | |

BUILDING

| | |
|---|---|
| NAME | ARMED FORCES RETIREMENT HOME |
| STREET | 1800 BEACH DRIVE |
| CITY/ST./ZIP | GULFPORT, MS 39507 |
| BUILDING NO. | |
| OTHER BUILDING NOs. | |
| FACILITY CODE | |

PROJECT

| | |
|---|---|
| PROJECT TITLE | ARMED FORCES RETIREMENT HOME GULFPORT, MISSISSIPPI |
| PROJECT DESCRIPTION | NEW CONSTRUCTION |
| PROJECT NO. | 31942982 |
| GSA PM | STEVEN SMITH |
| SUBMISSION | ISSUED FOR CONSTRUCTION |
| SUB. DATE | 09/08/2008 |

DRAWING

| | |
|---|---|
| DRAWING TITLE | CONCRETE SECTIONS & DETAILS |
| FILE NAME | S-523-N0095730.DWG |
| FLOOR NO. | 00 |
| DRAWN BY | JVS DATE DRAFTED: |
| CHECKED BY | MWZ SHEET SIZE: 34 X 44 |
| DRAWING NO. | 18 S 5 23 (DISCIPLINE SHEET TYPE SEQUENCE) |
| | SHEET 000 OF 000 |

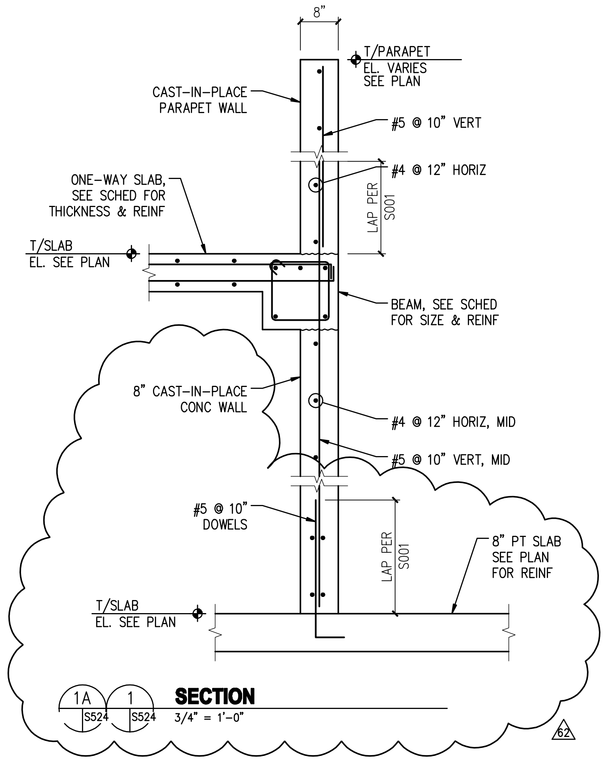


1A S524 1 S524 **SECTION** 3/4" = 1'-0"

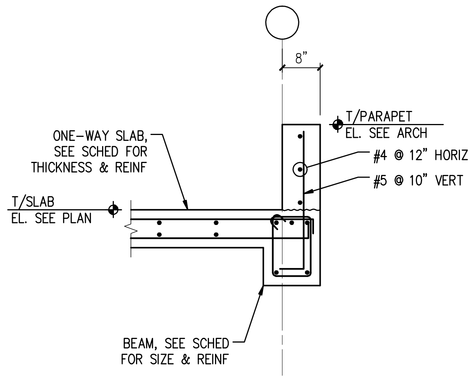


2 S524 **SECTION** 3/4" = 1'-0"

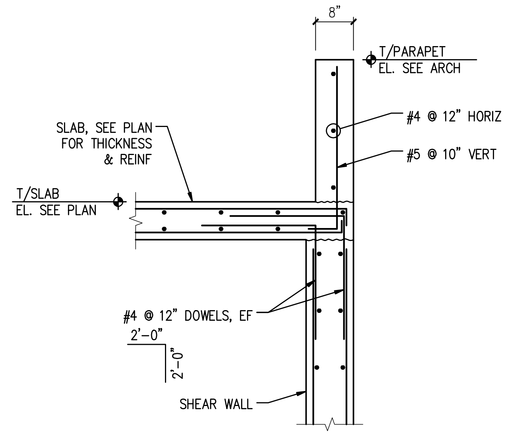


3 S524 **SECTION** 3/4" = 1'-0"

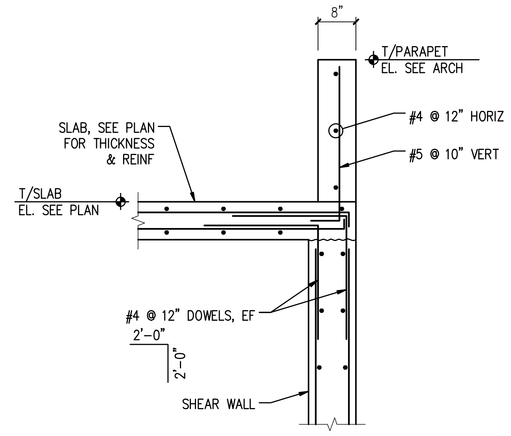


4 S524 **SECTION** 3/4" = 1'-0"

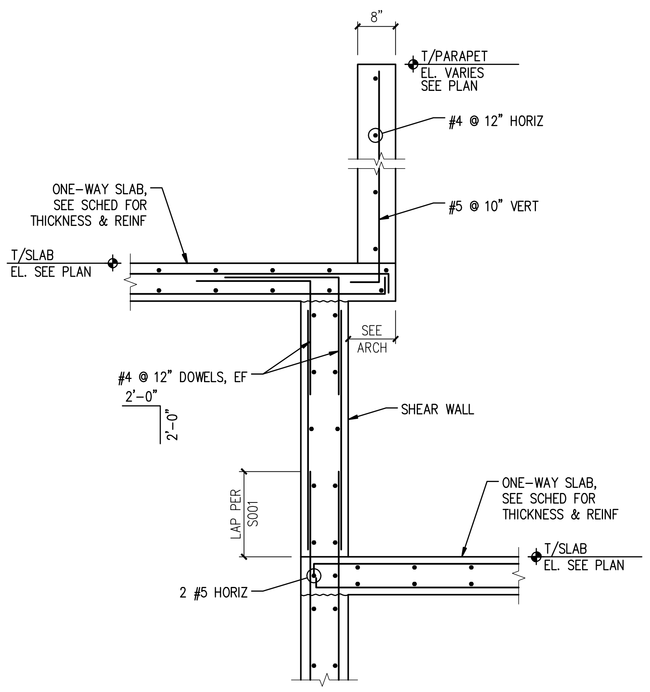


5 S524 **SECTION** 3/4" = 1'-0"

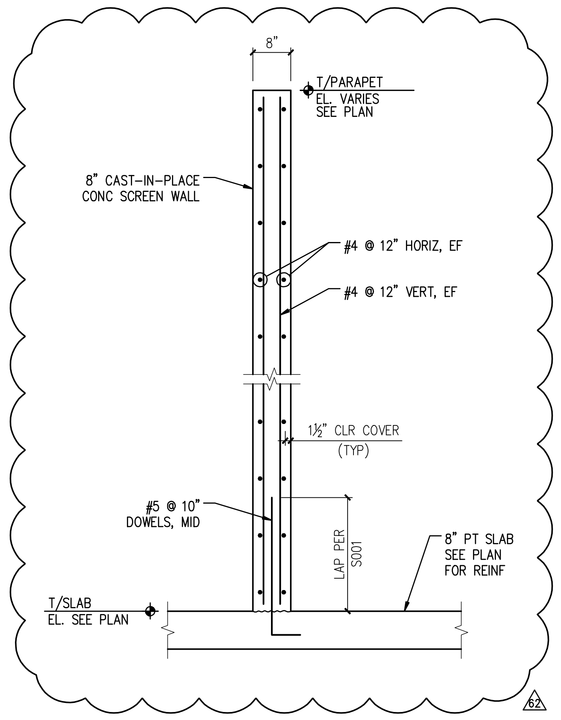


6 S524 **SECTION** 3/4" = 1'-0"

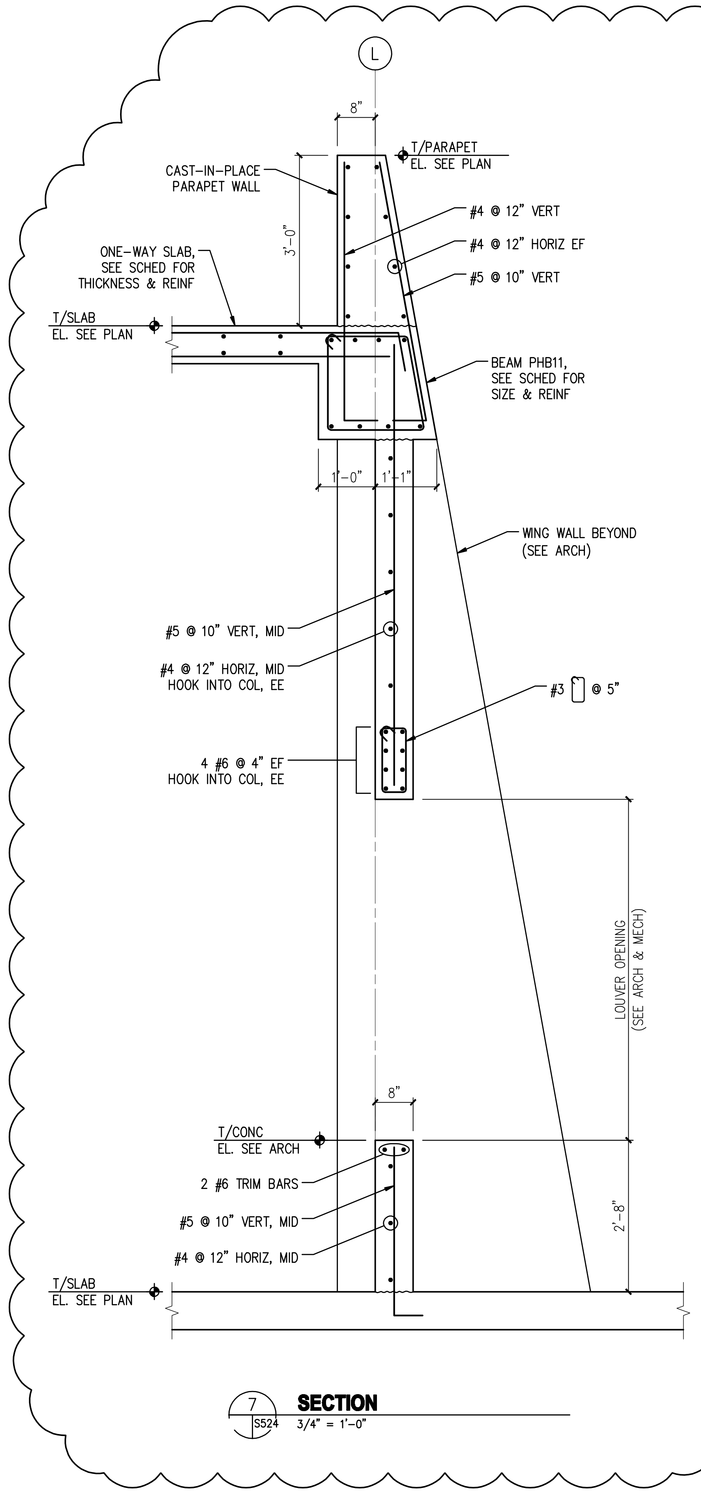


7 S524 **SECTION** 3/4" = 1'-0"

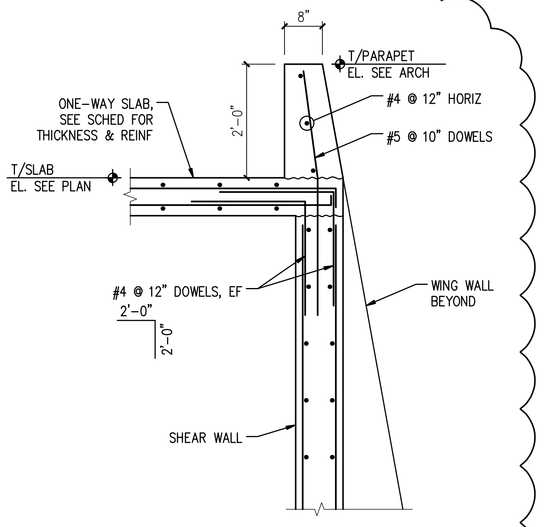


8 S524 **SECTION** 3/4" = 1'-0"

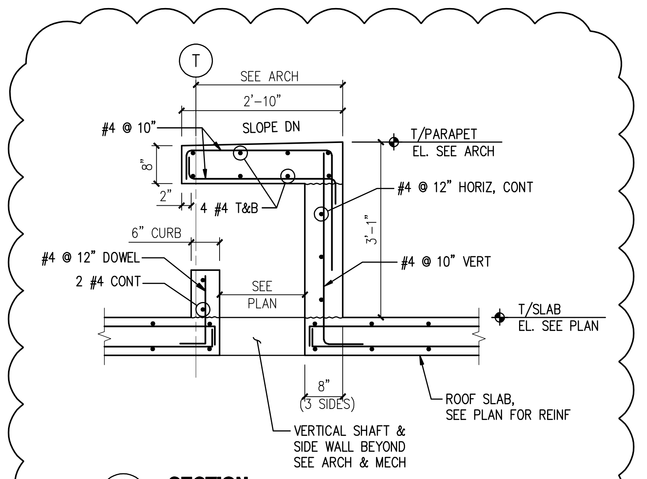


9 S524 **SECTION** 3/4" = 1'-0"

PROPERTY OF THE UNITED STATES GOVERNMENT – FOR OFFICIAL USE ONLY. Do not remove this notice. Properly destroy documents when no longer needed.

GSA
GENERAL SERVICES ADMINISTRATION
77 FORSYTH STREET
SUITE 600
ATLANTA, GA 30303
TEL: (404)331-3200

AFRH The Premier Retirement Community for America's Veterans

JACOBS
PROJECT MANAGEMENT CONSULTANT TO
THE GENERAL SERVICES ADMINISTRATION

YATES CONSTRUCTION

SFCS Architecture Engineering Planning Interiors

URS
URS CORPORATION
2020 K ST, NW
SUITE 300
WASHINGTON D.C. 20006

CERTIFICATIONS

DISTRICT OF COLUMBIA
MARK W. ZIMPELMAN
8572
REGISTERED
PROFESSIONAL ENGINEER
01/09/09

KEY PLAN

REVISION NOTES

| MARK | DATE | DESCRIPTION |
|---|---|---|
| 26 | 06/20/08 | PENTHOUSE, PH ROOF & PAV D SLABS |
| | 06/20/08 | ISSUED FOR CONSTRUCTION |
| 27 | 09/08/08 | RE-ISSUED FOR CONSTRUCTION |
| 62 | 12/02/08 | CIVIL, STRUCT, ARCH REV |
| 62 | 01/09/09 | PENTHOUSE & STEEL REDESIGN |

GRAPHIC SCALE

CONTRACTORS

| | |
|---|---|
| A/E CON. NO. | GS-04P-07-EX-C-0099 |
| A/E TASK NO. | |
| CONS. CONTR. | |
| CONS. WORK | |
| PRIME A/E | |
| SUB A/E | |
| CONSTR. CON. | |

BUILDING

| | |
|---|---|
| NAME | ARMED FORCES RETIREMENT HOME |
| STREET | 1800 BEACH DRIVE |
| CITY/ST./ZIP | GULFPORT, MS 39507 |
| BUILDING NO. | |
| OTHER BUILDING NOs. | |
| FACILITY CODE | |

PROJECT

| | |
|---|---|
| PROJECT TITLE | ARMED FORCES RETIREMENT HOME GULFPORT, MISSISSIPPI |
| PROJECT DESCRIPTION | NEW CONSTRUCTION |
| PROJECT NO. | 31942982 |
| GSA PM | STEVEN SMITH |
| SUBMISSION | ISSUED FOR CONSTRUCTION |
| SUB. DATE | 09/08/2008 |

DRAWING

| | |
|---|---|
| DRAWING TITLE | CONCRETE SECTIONS & DETAILS |
| FILE NAME | S-524-N0095730.DWG |
| FLOOR NO. | 00 |
| DRAWN BY | JVS DATE DRAFTED: |
| CHECKED BY | MWZ SHEET SIZE: 34 X 44 |
| DRAWING NO. | 26 S 5 24 |
| | DISCIPLINE SHEET TYPE SEQUENCE |
| | SHEET 000 OF 000 |

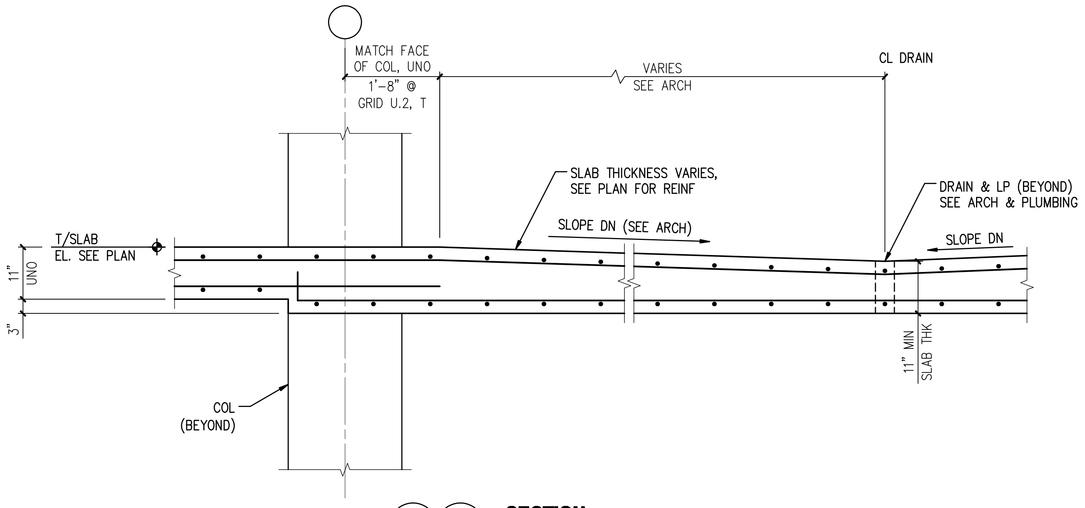


1A S525 1 S525 **SECTION** 3/4" = 1'-0"

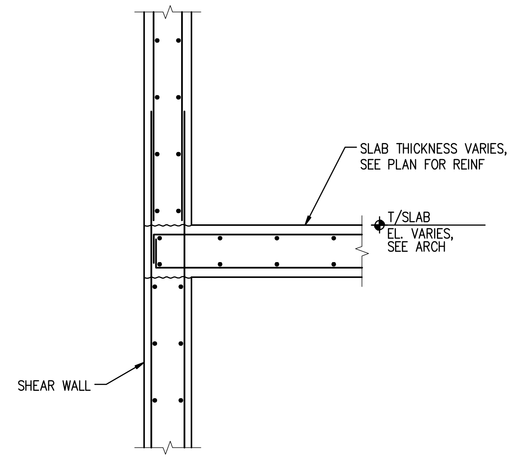


2 S525 **SECTION** 3/4" = 1'-0"

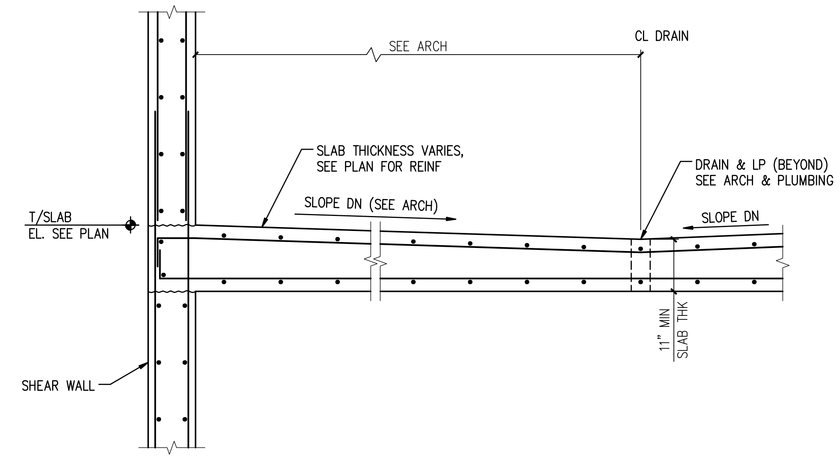


3 S525 **SECTION** 3/4" = 1'-0"

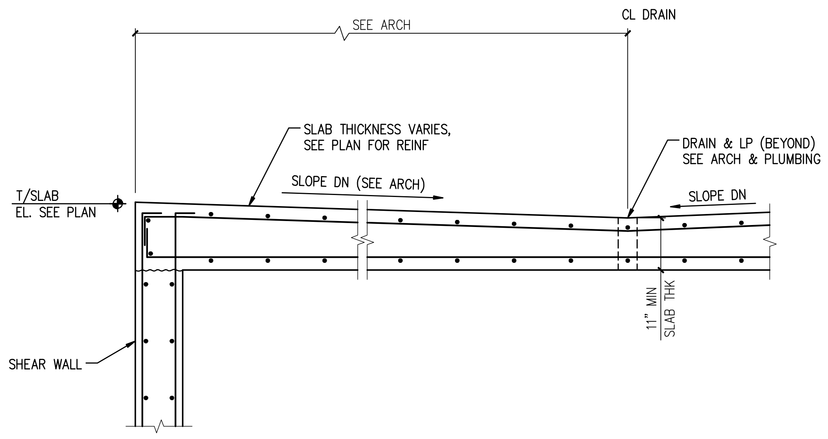


4 S525 **SECTION** 3/4" = 1'-0"

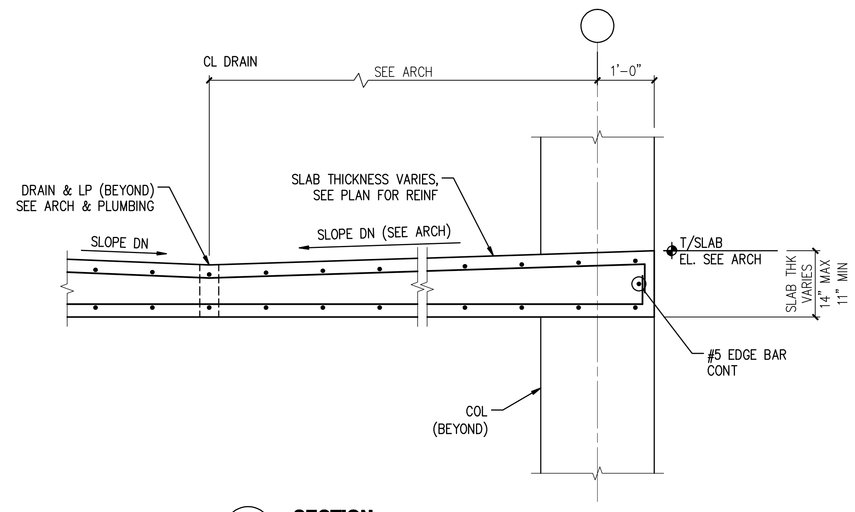


5 S525 **SECTION** 3/4" = 1'-0"

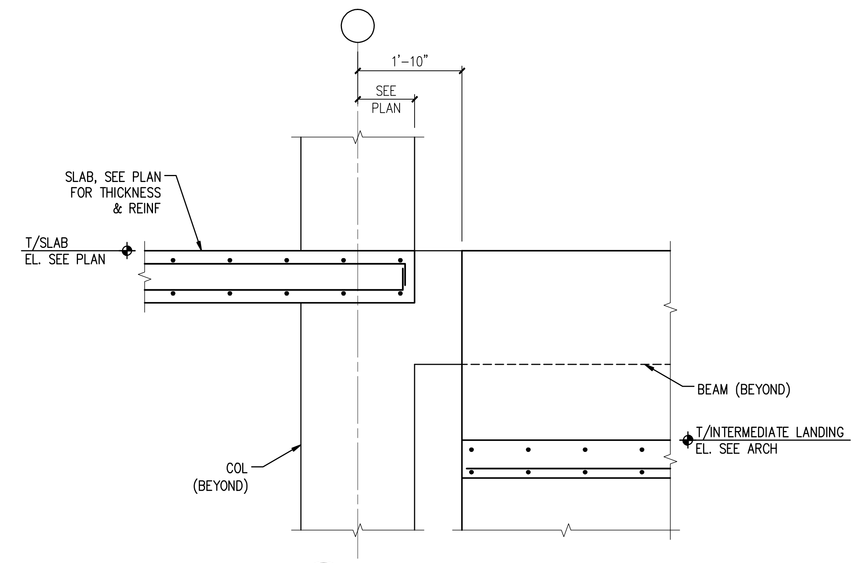


6 S525 **SECTION** 3/4" = 1'-0"

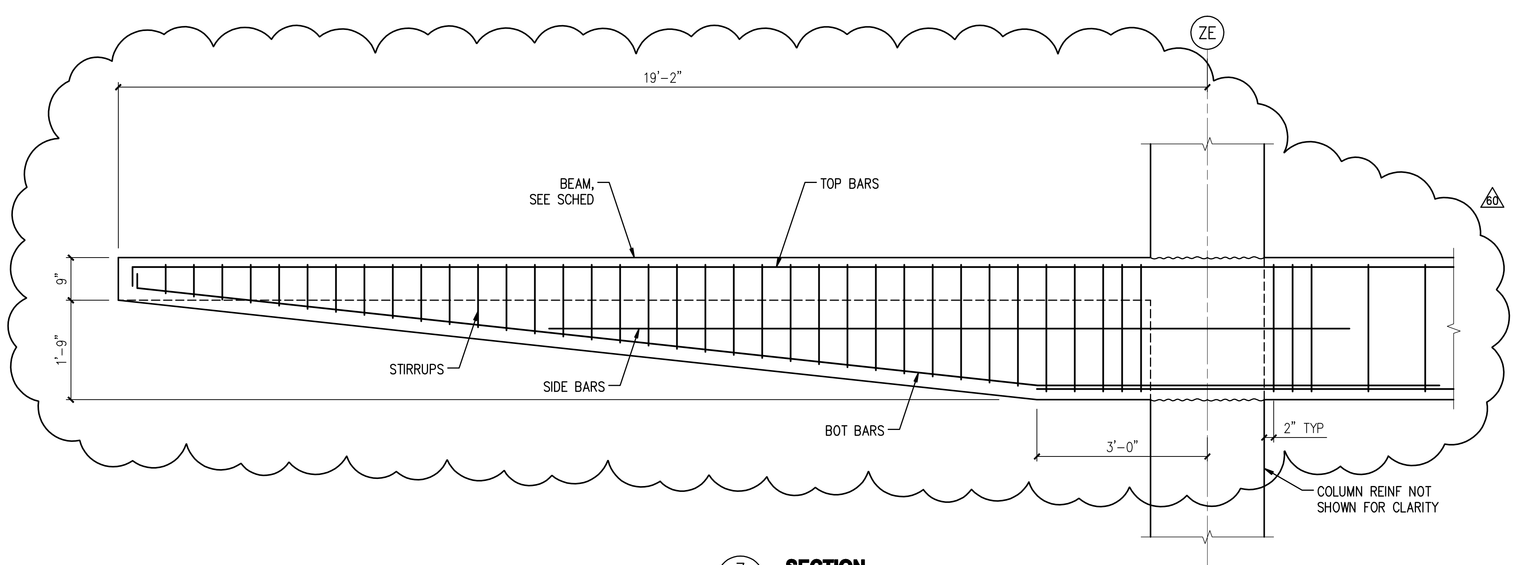


7 S525 **SECTION** 3/4" = 1'-0"

8 S525 **NOT USED** 3/4" = 1'-0"

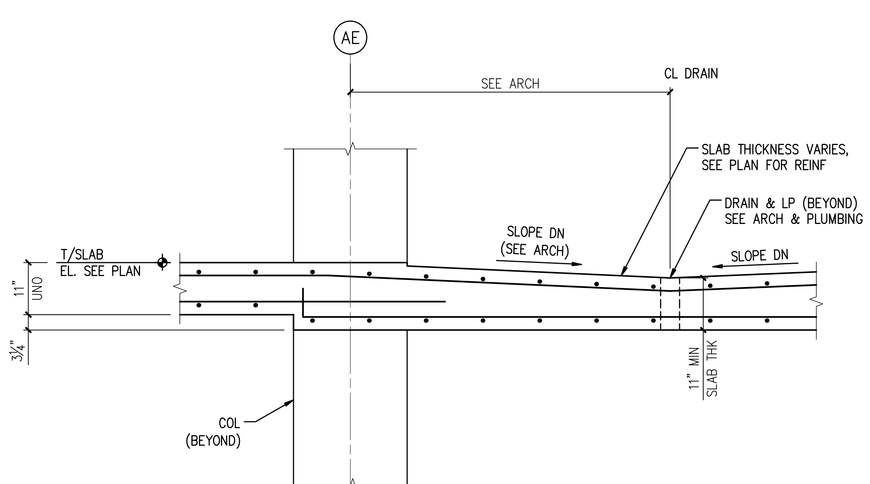


9 S525 **SECTION** 3/4" = 1'-0"

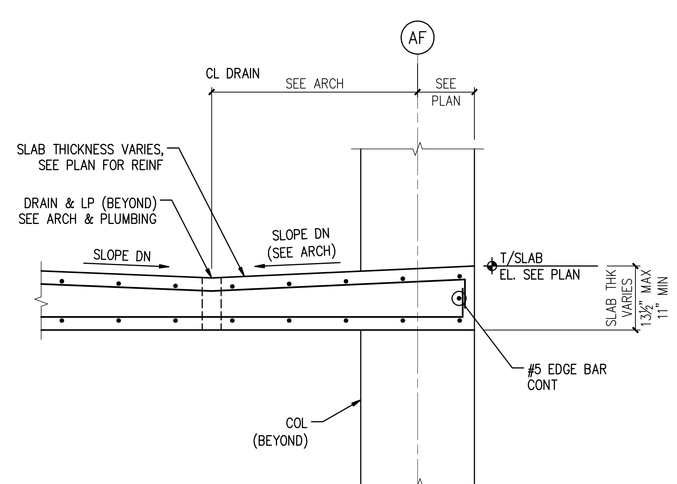


10 S525 **SECTION** 3/4" = 1'-0"

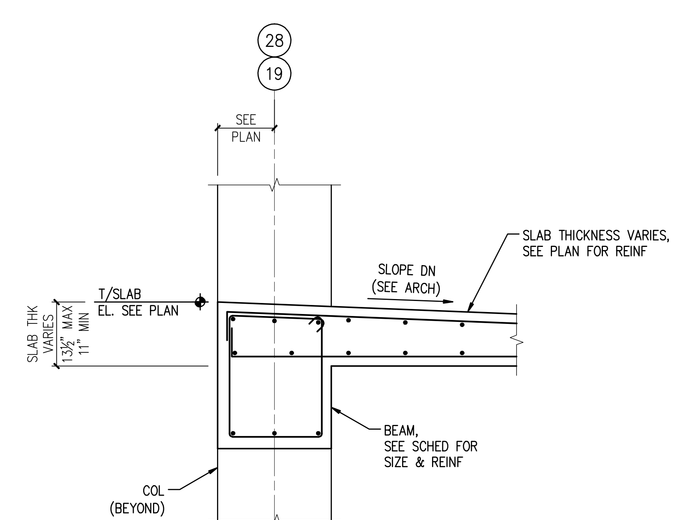


11 S525 **SECTION** 3/4" = 1'-0"

PROPERTY OF THE UNITED STATES GOVERNMENT – FOR OFFICIAL USE ONLY. Do not remove this notice. Properly destroy documents when no longer needed.

GENERAL SERVICES ADMINISTRATION
77 FORSYTH STREET
SUITE 600
ATLANTA, GA 30303
TEL: (404)331-3200

AFRH The Premier Retirement Community for America's Veterans

JACOBS
PROJECT MANAGEMENT CONSULTANT TO THE GENERAL SERVICES ADMINISTRATION

YATES CONSTRUCTION

SFCS Architecture Engineering Planning Interiors

URS CORPORATION
2020 K ST, NW
SUITE 300
WASHINGTON D.C. 20006

ISSUED FOR CONSTRUCTION

CERTIFICATIONS

DISTRICT OF COLUMBIA MARK W. ZIMPELMAN 8572 REGISTERED PROFESSIONAL ENGINEER
12/02/08

KEY PLAN

REVISION NOTES

| MARK | DATE | DESCRIPTION |
|---|---|---|
| 34 | 08/18/08 | REVISED ENTRY & LOADING DOCK |
| | 08/18/08 | ISSUED FOR CONSTRUCTION |
| 38 | 08/29/08 | ENTRY CANOPY |
| 37 | 09/08/08 | RE-ISSUED FOR CONSTRUCTION |
| 46 | 09/25/08 | ADD SLOPES AT MECH RM #3 |
| 60 | 12/02/08 | CIVIL, STRUCT, ARCH REV |

GRAPHIC SCALE

CONTRACTORS

| | |
|---|---|
| A/E CON. NO. | GS-04P-07-EX-C-0099 |
| A/E TASK NO. | |
| CONS. CONTR. | |
| CONS. WORK | |
| PRIME A/E | |
| SUB A/E | |
| CONSTR. CON. | |

BUILDING

| | |
|---|---|
| NAME | ARMED FORCES RETIREMENT HOME |
| STREET | 1800 BEACH DRIVE |
| CITY/ST./ZIP | GULFPORT, MS 39507 |
| BUILDING NO. | |
| OTHER BUILDING NOs. | |
| FACILITY CODE | |

PROJECT

| | |
|---|---|
| PROJECT TITLE | ARMED FORCES RETIREMENT HOME GULFPORT, MISSISSIPPI |
| PROJECT DESCRIPTION | NEW CONSTRUCTION |
| PROJECT NO. | 31942982 |
| GSA PM | STEVEN SMITH |
| SUBMISSION | ISSUED FOR CONSTRUCTION |
| SUB. DATE | 09/08/2008 |

DRAWING

| | |
|---|---|
| DRAWING TITLE | CONCRETE SECTIONS & DETAILS |
| FILE NAME | S-525-N0095730.DWG |
| FLOOR NO. | 00 |
| DRAWN BY | JVS DATE DRAFTED: |
| CHECKED BY | MWZ SHEET SIZE: 34 X 44 |
| DRAWING NO. | 34 S 5 25 |
| | DISCIPLINE SHEET TYPE SEQUENCE |
| | SHEET 000 OF 000 |

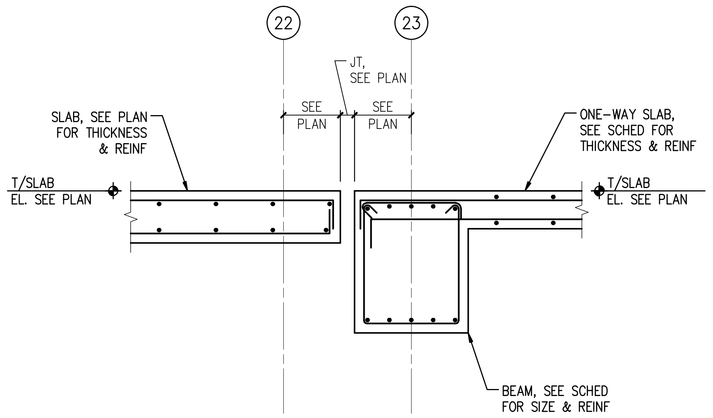


1 S526 **SECTION**
3/4" = 1'-0"

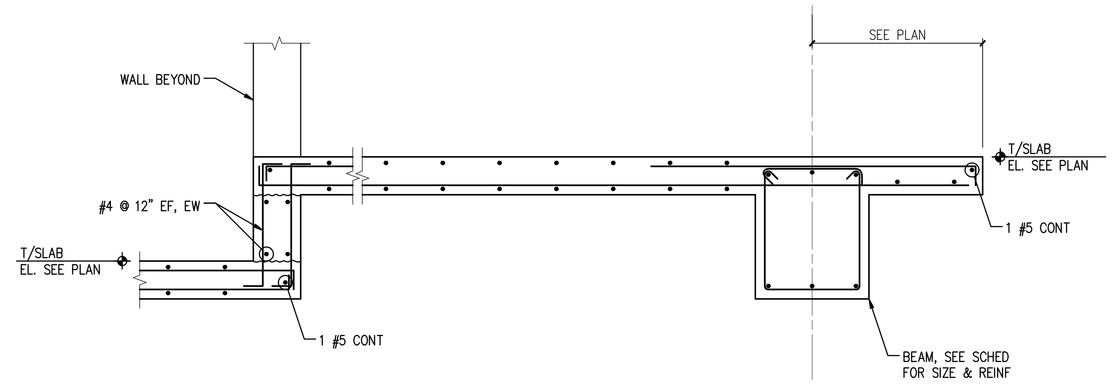


2 S526 **SECTION**
3/4" = 1'-0"

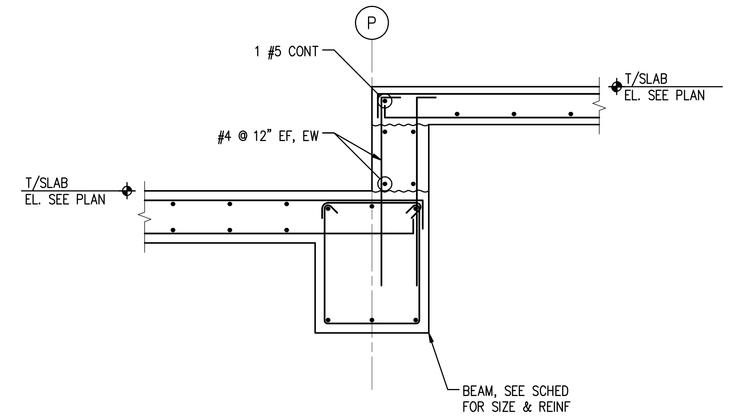


3 S526 **SECTION**
3/4" = 1'-0"

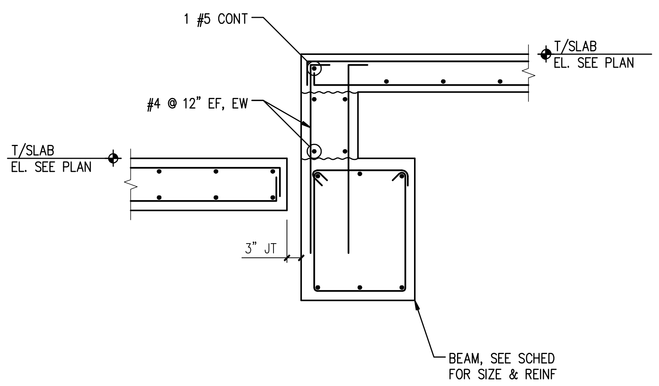


4 S526 **SECTION**
3/4" = 1'-0"

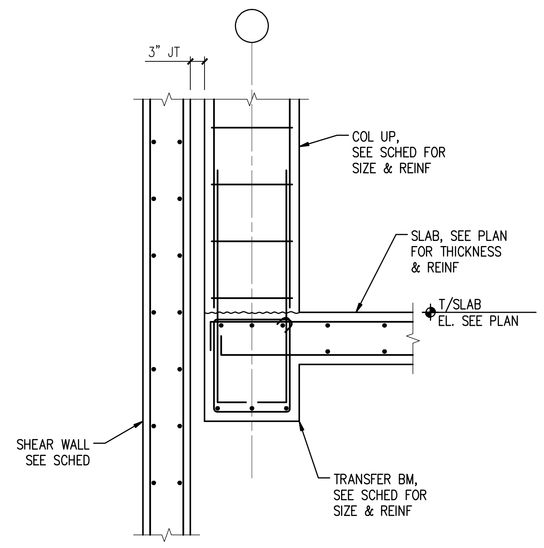


5 S526 **SECTION**
3/4" = 1'-0"

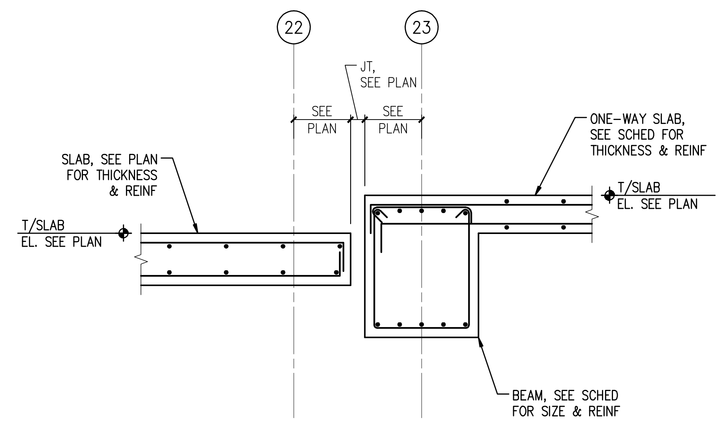


6 S526 **SECTION**
3/4" = 1'-0"

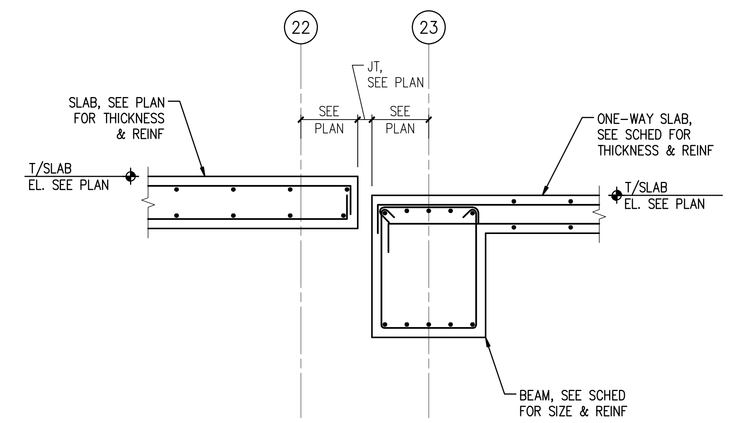


7 S526 **SECTION**
3/4" = 1'-0"

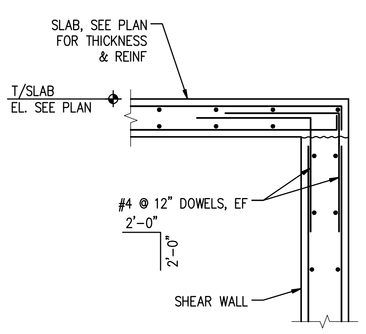


8 S526 **SECTION**
3/4" = 1'-0"

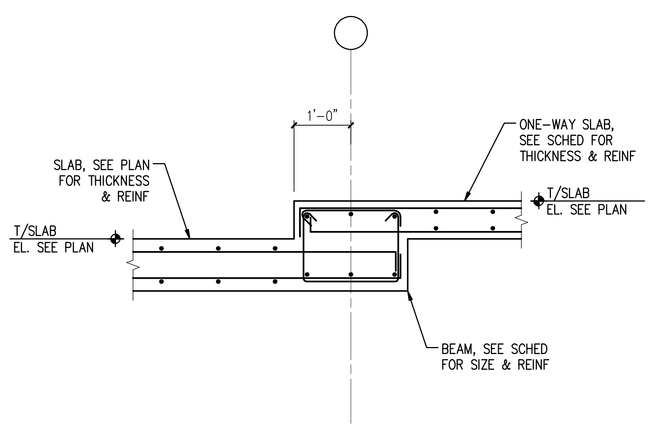


9 S526 **SECTION**
3/4" = 1'-0"

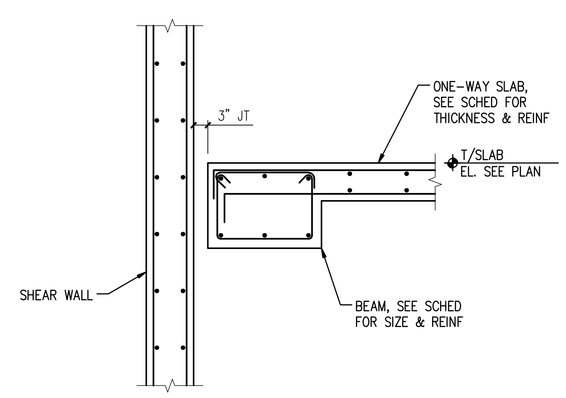


10 S526 **SECTION**
3/4" = 1'-0"

PROPERTY OF THE UNITED STATES GOVERNMENT – FOR OFFICIAL USE ONLY. Do not remove this notice. Properly destroy documents when no longer needed.

GSA
GENERAL SERVICES ADMINISTRATION
77 FORSYTH STREET
SUITE 600
ATLANTA, GA 30303
TEL: (404)331-3200

AFRH The Premier Retirement Community for America's Veterans

JACOBS
PROJECT MANAGEMENT CONSULTANT TO THE GENERAL SERVICES ADMINISTRATION

YATES CONSTRUCTION

SFCS Architecture Engineering Planning Interiors

URS
URS CORPORATION
2020 K ST, NW
SUITE 300
WASHINGTON D.C. 20006

ISSUED FOR CONSTRUCTION

CERTIFICATIONS

DISTRICT OF COLUMBIA
MARK W. ZIMPFELMAN
8572
REGISTERED PROFESSIONAL ENGINEER
09/08/08

KEY PLAN

REVISION NOTES

| MARK | DATE | DESCRIPTION |
|---|---|---|
| 6A | 08/18/08 | REVISED ENTRY & LOADING DOCK |
| | 08/18/08 | ISSUED FOR CONSTRUCTION |
| 6B | 09/08/08 | RE-ISSUED FOR CONSTRUCTION |

GRAPHIC SCALE

CONTRACTORS

| | |
|---|---|
| A/E CON. NO. | GS-04P-07-EX-C-0099 |
| A/E TASK NO. | |
| CONS. CONTR. | |
| CONS. WORK | |
| PRIME A/E | |
| SUB A/E | |
| CONSTR. CON. | |

BUILDING

| | |
|---|---|
| NAME | ARMED FORCES RETIREMENT HOME |
| STREET | 1800 BEACH DRIVE |
| CITY/ST./ZIP | GULFPORT, MS 39507 |
| BUILDING NO. | |
| OTHER BUILDING NOs. | |
| FACILITY CODE | |

PROJECT

| | |
|---|---|
| PROJECT TITLE | ARMED FORCES RETIREMENT HOME GULFPORT, MISSISSIPPI |
| PROJECT DESCRIPTION | NEW CONSTRUCTION |
| PROJECT NO. | 31942982 |
| GSA PM | STEVEN SMITH |
| SUBMISSION | ISSUED FOR CONSTRUCTION |
| SUB. DATE | 09/08/2008 |

DRAWING

| | |
|---|---|
| DRAWING TITLE | CONCRETE SECTIONS & DETAILS |
| FILE NAME | S-526-N0095730.DWG |
| FLOOR NO. | 00 |
| DRAWN BY | JVS DATE DRAFTED: |
| CHECKED BY | MWZ SHEET SIZE: 34 X 44 |
| DRAWING NO. | 6A S 5 26 |
| | DISCIPLINE SHEET TYPE SEQUENCE |
| | SHEET 000 OF 000 |

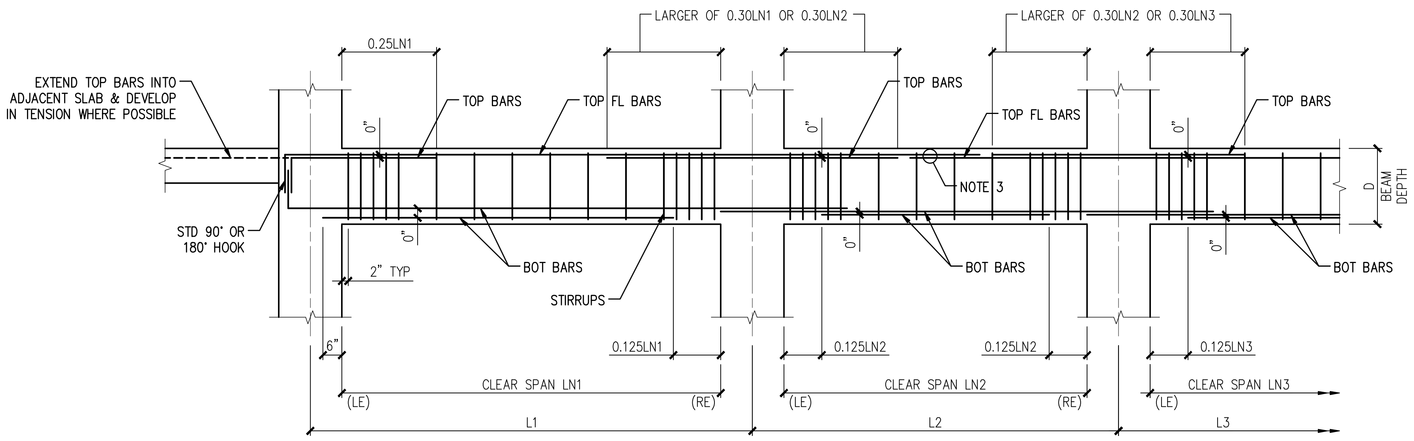


NOTES:

1. SEE BEAM SCHEDULE S611 FOR BEAM SIZE, REINFORCING AND STIRRUPS.
2. LOCATE AT LEAST TWO BOTTOM BARS WITHIN SUPPORT.
3. PROVIDE AT LEAST TWO TOP BAR CONTINUOUS AT PERIMETER BEAMS.
4. PROVIDE 2 #5 HOLDING BARS TO SUPPORT STIRRUPS WHERE TOP BARS ARE NOT FL BARS.
5. PROVIDE THE LARGER AMOUNT OF TOP LE OR RE BARS AT COMMON SUPPORT FOR ADJACENT SPANS.
6. MAXIMUM STIRRUP SPACING SHALL NOT EXCEED D/2, UNLESS NOTED OTHERWISE IN BEAM SCHEDULE.

1 S531 **TYP BEAM DETAIL**
N.T.S.

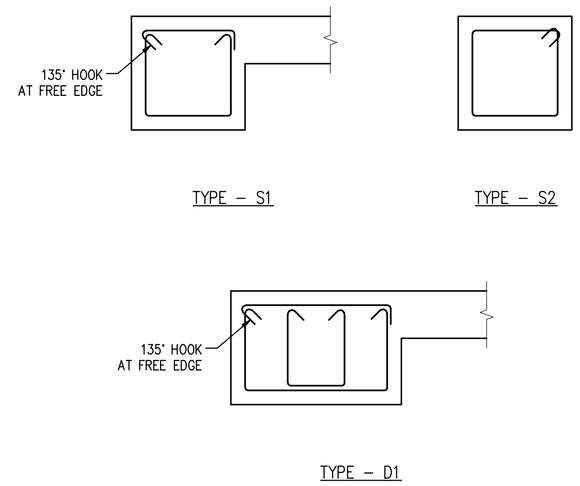


30

2 S531 **TYP STIRRUP TYPES**
N.T.S.

GENERAL SERVICES ADMINISTRATION
77 FORSYTH STREET
SUITE 600
ATLANTA, GA 30303
TEL: (404)331-3200

PROJECT MANAGEMENT CONSULTANT TO THE GENERAL SERVICES ADMINISTRATION

URS CORPORATION
2020 K ST, NW
SUITE 300
WASHINGTON D.C. 20006

ISSUED FOR CONSTRUCTION

CERTIFICATIONS

DISTRICT OF COLUMBIA
MARK W. ZIMPELMAN
8572
REGISTERED
PROFESSIONAL ENGINEER
09/08/08

KEY PLAN

REVISION NOTES

| MARK | DATE | DESCRIPTION |
|---|---|---|
| 0 | 03/25/08 | FIRST FLOOR SLAB SUBMISSION |
| | 03/25/08 | ISSUED FOR CONSTRUCTION |
| 30 | 07/21/08 | REVISED POUR STRIP LOCATION |
| 31 | 09/08/08 | RE-ISSUED FOR CONSTRUCTION |

GRAPHIC SCALE

CONTRACTORS

| | |
|---|---|
| A/E CON. NO. | GS-04P-07-EX-C-0099 |
| A/E TASK NO. | |
| CONS. CONTR. | |
| CONS. WORK | |
| PRIME A/E | |
| SUB A/E | |
| CONSTR. CON. | |

BUILDING

| | |
|---|---|
| NAME | ARMED FORCES RETIREMENT HOME |
| STREET | 1800 BEACH DRIVE |
| CITY/ST./ZIP | GULFPORT, MS 39507 |
| BUILDING NO. | |
| OTHER BUILDING NOs. | |
| FACILITY CODE | |

PROJECT

| | |
|---|---|
| PROJECT TITLE | ARMED FORCES RETIREMENT HOME GULFPORT, MISSISSIPPI |
| PROJECT DESCRIPTION | NEW CONSTRUCTION |
| PROJECT NO. | 31942982 |
| GSA PM | STEVEN SMITH |
| SUBMISSION | ISSUED FOR CONSTRUCTION |
| SUB. DATE | 09/08/2008 |

DRAWING

| | |
|---|---|
| DRAWING TITLE | BEAM TYPICAL DETAILS |
| FILE NAME | S-531-N0095730.DWG |
| FLOOR NO. | 00 |
| DRAWN BY | JVS DATE DRAFTED: |
| CHECKED BY | MWZ SHEET SIZE: 34 X 44 |
| DRAWING NO. | 0 S 5 31 |
| | DISCIPLINE SHEET TYPE SEQUENCE |
| | SHEET 000 OF 000 |

PROPERTY OF THE UNITED STATES GOVERNMENT – FOR OFFICIAL USE ONLY. Do not remove this notice. Properly destroy documents when no longer needed.

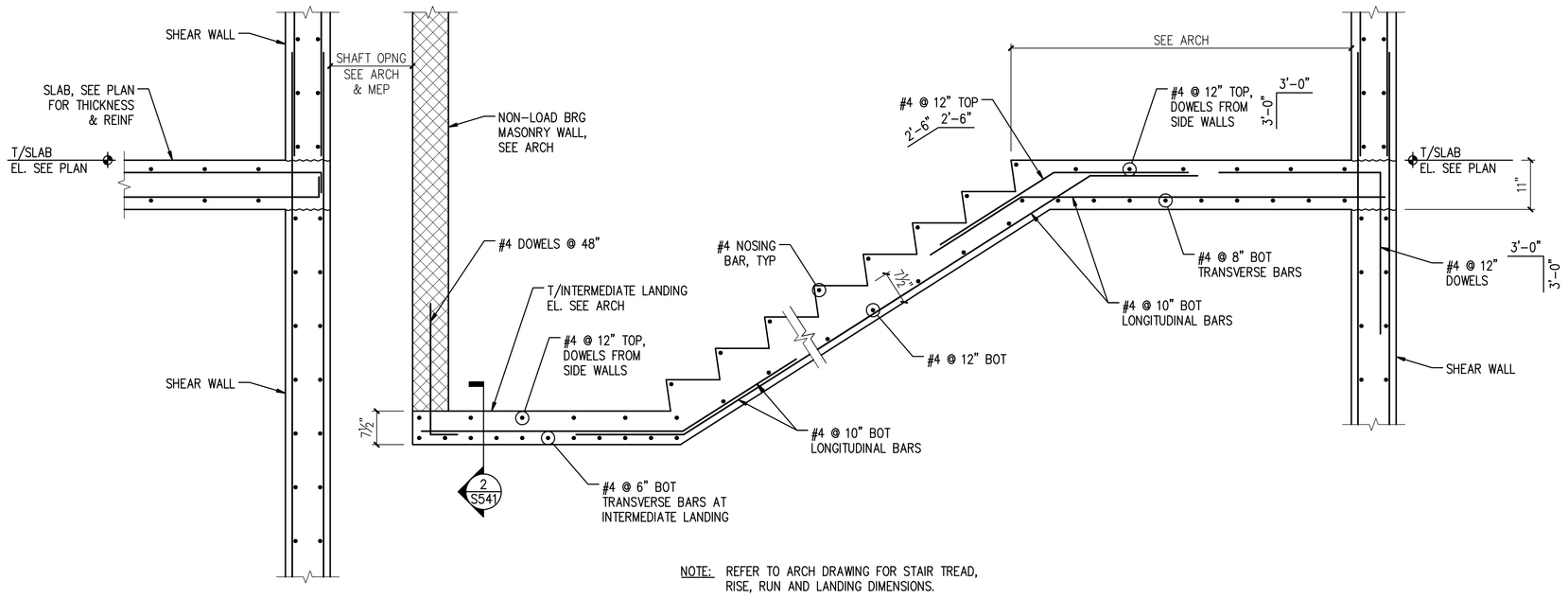


NOTE: REFER TO ARCH DRAWING FOR STAIR TREAD, RISE, RUN AND LANDING DIMENSIONS.

1 S541 **SECTION**
3/4" = 1'-0"

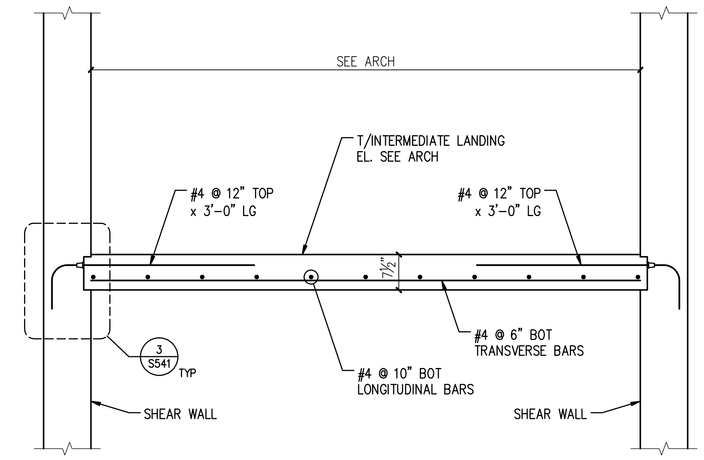


2 S541 **TYP INTERMEDIATE LANDING**
3/4" = 1'-0"

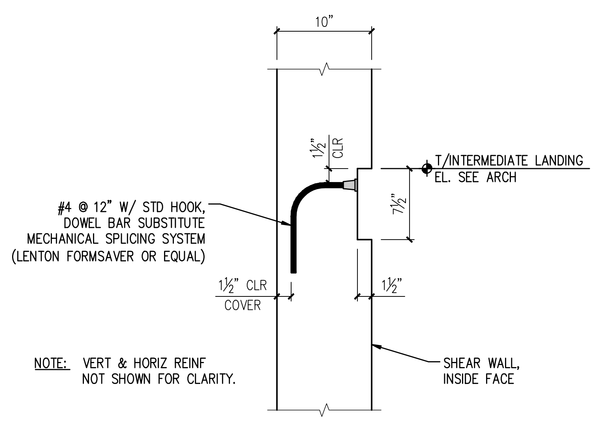


NOTE: VERT & HORIZ REINF NOT SHOWN FOR CLARITY.

3 S541 **SECTION**
1 1/2" = 1'-0"

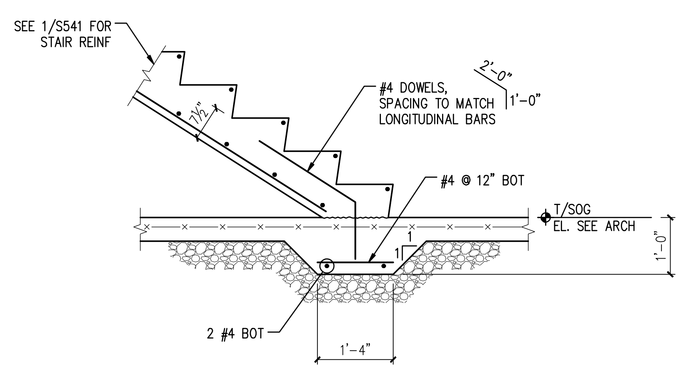


4 S541 **TYP STAIR AT SLAB-ON-GRADE**
3/4" = 1'-0"

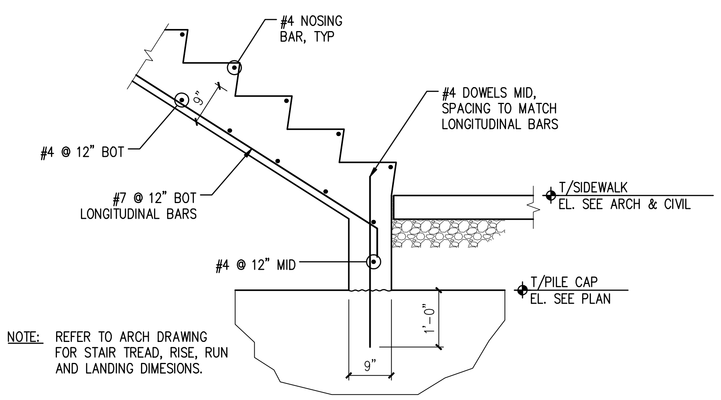


NOTE: REFER TO ARCH DRAWING FOR STAIR TREAD, RISE, RUN AND LANDING DIMESIONS.

5 S541 **TYP TERRACE STAIR AT PILE CAP**
3/4" = 1'-0"

PROPERTY OF THE UNITED STATES GOVERNMENT – FOR OFFICIAL USE ONLY. Do not remove this notice. Properly destroy documents when no longer needed.

GENERAL SERVICES ADMINISTRATION
77 FORSYTH STREET
SUITE 600
ATLANTA, GA 30303
TEL: (404)331-3200

AFRH The Premier Retirement Community for America's Veterans
JACOBS PROJECT MANAGEMENT CONSULTANT TO THE GENERAL SERVICES ADMINISTRATION
YATES CONSTRUCTION
SFCS Architecture Engineering Planning Interiors
URS CORPORATION
2020 K ST, NW
SUITE 300
WASHINGTON D.C. 20006

ISSUED FOR CONSTRUCTION

CERTIFICATIONS

DISTRICT OF COLUMBIA — MARK W. ZIMPFRAMAN — 8572 — REGISTERED PROFESSIONAL ENGINEER
09/08/08

KEY PLAN

REVISION NOTES

| MARK | DATE | DESCRIPTION |
|---|---|---|
| 1B | 05/09/08 | LEVEL 2 SLAB – PENETRATIONS |
| | 05/09/08 | ISSUED FOR CONSTRUCTION |
| 3A | 08/18/08 | REVISED ENTRY & LOADING DOCK |
| 3A | 09/08/08 | RE-ISSUED FOR CONSTRUCTION |

GRAPHIC SCALE

CONTRACTORS

| | |
|---|---|
| A/E CON. NO. | GS-04P-07-EX-C-0099 |
| A/E TASK NO. | |
| CONS. CONTR. | |
| CONS. WORK | |
| PRIME A/E | |
| SUB A/E | |
| CONSTR. CON. | |

BUILDING

| | |
|---|---|
| NAME | ARMED FORCES RETIREMENT HOME |
| STREET | 1800 BEACH DRIVE |
| CITY/ST./ZIP | GULFPORT, MS 39507 |
| BUILDING NO. | |
| OTHER BUILDING NOs. | |
| FACILITY CODE | |

PROJECT

| | |
|---|---|
| PROJECT TITLE | ARMED FORCES RETIREMENT HOME GULFPORT, MISSISSIPPI |
| PROJECT DESCRIPTION | NEW CONSTRUCTION |
| PROJECT NO. | 31942982 |
| GSA PM | STEVEN SMITH |
| SUBMISSION | ISSUED FOR CONSTRUCTION |
| SUB. DATE | 09/08/2008 |

DRAWING

| | |
|---|---|
| DRAWING TITLE | STAIR TYPICAL DETAILS |
| FILE NAME | S-541-N0095730.DWG |
| FLOOR NO. | 00 |
| DRAWN BY | JVS DATE DRAFTED: |
| CHECKED BY | MWZ SHEET SIZE: 34 X 44 |
| DRAWING NO. 1B | S 5 41 (DISCIPLINE SHEET TYPE SEQUENCE) |
| | SHEET 000 OF 000 |

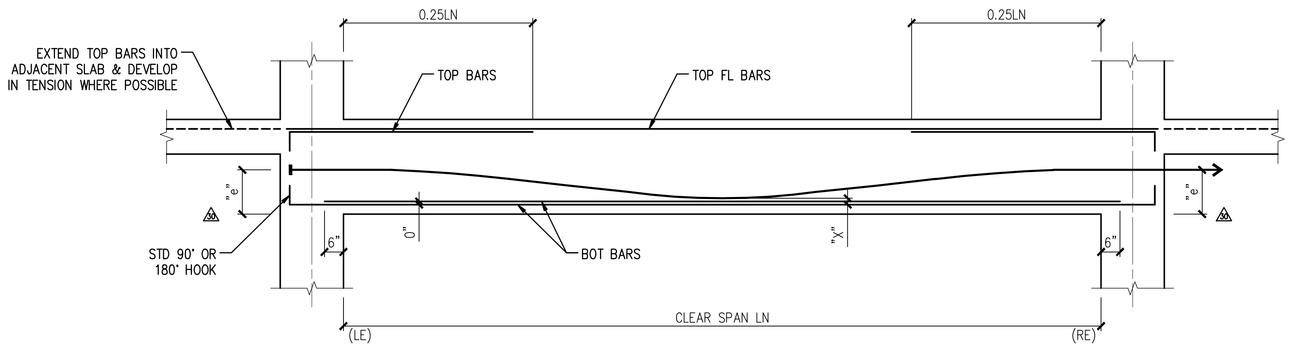


NOTES:

1. SEE POST-TENSIONED BEAM SCHEDULE ON S611 FOR BEAM SIZE, REINFORCING, STIRRUPS P-T FORCE AND TENDON PROFILE.
2. STIRRUPS NOT SHOWN FOR CLARITY.
3. LOCATE AT LEAST TWO BOTTOM BARS WITHIN SUPPORT.
4. MAXIMUM STIRRUP SPACING SHALL NOT EXCEED D/2, UNLESS NOTED OTHERWISE IN BEAM SCHEDULE.
5. PROVIDE HOLDING BARS AS REQUIRED TO MAINTAIN P-T TENDON PROFILE. WHERE TENDONS ARE WITHIN 6" OF BEAM SOFFIT, PROVIDE HOLDING BARS AT EACH BEAM STIRRUP.

1 / S561 **TYP POST-TENSIONED BEAM DETAIL - SINGLE SPAN**

N.T.S.

POST-TENSION CONCRETE:

1. POST-TENSION SYSTEM SHALL BE AN UNBONDED, MONO-STRAND TENDON SYSTEM. POST-TENSIONED TENDONS SHALL BE SEVEN-WIRE STRAND CONFORMING TO ASTM A416 WITH A MINIMUM ULTIMATE STRENGTH OF 270,000 PSI.
2. PROVIDE WATERTIGHT, ENCAPSULATED SYSTEM FOR TENDONS IN ALL EXTERIOR BALCONY SLABS.
3. COAT EXPOSED PORTION OF TENDONS AND GRIPPING PART OF THE ANCHORAGE WITH AN EPOXY-RESIN COMPOUND BEFORE BEING DRY-PACKED WITH NON-SHRINK GROUT.
4. REINFORCE ALL POCKETS REQUIRED FOR ANCHORAGE TO PREVENT ANY DECREASE IN THE STRENGTH OF THE STRUCTURE.
5. INDICATE OPENINGS, SLEEVES AND OTHER PENETRATIONS ON SHOP DRAWINGS. OPENINGS NOT SHOWN ON THE APPROVED SHOP DRAWINGS WILL REQUIRE REVIEW BY THE ARCHITECT PRIOR TO FIELD WORK.
6. SHOW PROPOSED CONSTRUCTION JOINT LOCATIONS ON BOTH POST-TENSIONED AND REINFORCING STEEL SHOP DRAWINGS. LOCATE CONSTRUCTION JOINTS WHERE THE TENDON PROFILE OCCURS AT MID-DEPTH OF CONCRETE MEMBER.
7. POST-TENSIONED FORCES INDICATED ON THE DRAWINGS ARE THE REQUIRED EFFECTIVE FORCES AFTER ALL APPROPRIATE LOSSES ARE TAKEN INTO ACCOUNT. SUBMIT SIGNED AND STAMPED CALCULATIONS FOR ALL LOSSES FOR SPECIFIED STRESSING LENGTHS TO ENSURE MINIMUM FINAL EFFECTIVE FORCE IS MAINTAINED.
8. DO NOT VARY TENDON PLACEMENT BY MORE THAN ⅛" VERTICALLY FROM THE POINTS DIMENSIONED.
9. COMMENCE WITH STRESSING OF TENDONS AFTER CONCRETE HAS OBTAINED A MINIMUM COMPRESSIVE STRENGTH OF 3,000 PSI. COMPLETE POST-TENSIONING OF TENDONS WITHIN 96 HOURS OF CONCRETE PLACEMENT.
10. SUBMIT STRESSING RECORDS TO THE ARCHITECT AFTER VERIFYING THAT THE REQUIRED NUMBER OF TENDONS INDICATED ON THE SHOP DRAWINGS HAVE BEEN STRESSED. DO NOT COMMENCE WITH FORMWORK STRIPPING AND CUTTING OF TENDON ENDS UNTIL STRESSING RECORDS AND ELONGATIONS HAVE BEEN REVIEWED AND APPROVED BY ARCHITECT.
11. IN THE EVENT OF A BROKEN TENDON OR BLOW-OUT, SUBMIT SIGNED AND STAMPED CALCULATIONS AND DETAILED PROCEDURES FOR REMEDIAL WORK REQUIRED.
12. PROVIDE CAST-IN-PLACE INSERTS TO SUPPORT SUSPENDED ARCHITECTURAL AND MEP COMPONENTS.
13. USE OF MECHANICAL ATTACHMENTS, SUCH AS POWDER ACTUATED FASTENERS OR EXPANSION ANCHORS, IN POST-TENSIONED BEAMS AND SLABS IS PROHIBITED UNLESS APPROVED BY THE ARCHITECT.
14. COREDRILLING OF POST-TENSIONED BEAMS AND SLABS IS NOT PERMITTED WITHOUT X-RAYS AND APPROVAL OF ARCHITECT.
15. INSPECTION BY AN APPROVED, INDEPENDENT TESTING AND INSPECTION AGENCY IS REQUIRED FOR ALL POST-TENSIONED WORK.

PROPERTY OF THE UNITED STATES GOVERNMENT – FOR OFFICIAL USE ONLY. Do not remove this notice. Properly destroy documents when no longer needed.

GSA
GENERAL SERVICES ADMINISTRATION
77 FORSYTH STREET
SUITE 600
ATLANTA, GA 30303
TEL: (404)331-3200

AFRH The Premier Retirement Community for America's Veterans
JACOBS
PROJECT MANAGEMENT CONSULTANT TO THE GENERAL SERVICES ADMINISTRATION

YATES CONSTRUCTION

SFCS Architecture Engineering Planning Interiors

URS
URS CORPORATION
2020 K ST, NW
SUITE 300
WASHINGTON D.C. 20006

ISSUED FOR CONSTRUCTION

CERTIFICATIONS

DISTRICT OF COLUMBIA
MARK W. ZIMPFELMAN
8572
REGISTERED
PROFESSIONAL ENGINEER
09/08/08

KEY PLAN

REVISION NOTES

| MARK | DATE | DESCRIPTION |
|---|---|---|
| 18 | 05/09/08 | LEVEL 2 SLAB – PENETRATIONS |
| | 05/09/08 | ISSUED FOR CONSTRUCTION |
| 19 | 07/21/08 | REVISED POUR STRIP LOCATION |
| 17 | 09/08/08 | RE-ISSUED FOR CONSTRUCTION |

GRAPHIC SCALE

CONTRACTORS

| | |
|---|---|
| A/E CON. NO. | GS-04P-07-EX-C-0099 |
| A/E TASK NO. | |
| CONS. CONTR. | |
| CONS. WORK | |
| PRIME A/E | |
| SUB A/E | |
| CONSTR. CON. | |

BUILDING

| | |
|---|---|
| NAME | ARMED FORCES RETIREMENT HOME |
| STREET | 1800 BEACH DRIVE |
| CITY/ST./ZIP | GULFPORT, MS 39507 |
| BUILDING NO. | |
| OTHER BUILDING NOs. | |
| FACILITY CODE | |

PROJECT

| | |
|---|---|
| PROJECT TITLE | ARMED FORCES RETIREMENT HOME GULFPORT, MISSISSIPPI |
| PROJECT DESCRIPTION | NEW CONSTRUCTION |
| PROJECT NO. | 31942982 |
| GSA PM | STEVEN SMITH |
| SUBMISSION | ISSUED FOR CONSTRUCTION |
| SUB. DATE | 09/08/2008 |

DRAWING

| | |
|---|---|
| DRAWING TITLE | POST-TENSIONED BEAM TYPICAL DETAILS |
| FILE NAME | S-561-N0095730.DWG |
| FLOOR NO. | 00 |
| DRAWN BY | JVS DATE DRAFTED: |
| CHECKED BY | MWZ SHEET SIZE: 34 X 44 |
| DRAWING NO. | 18 S 5 61 |
| | DISCIPLINE SHEET TYPE SEQUENCE |
| | SHEET 000 OF 000 |

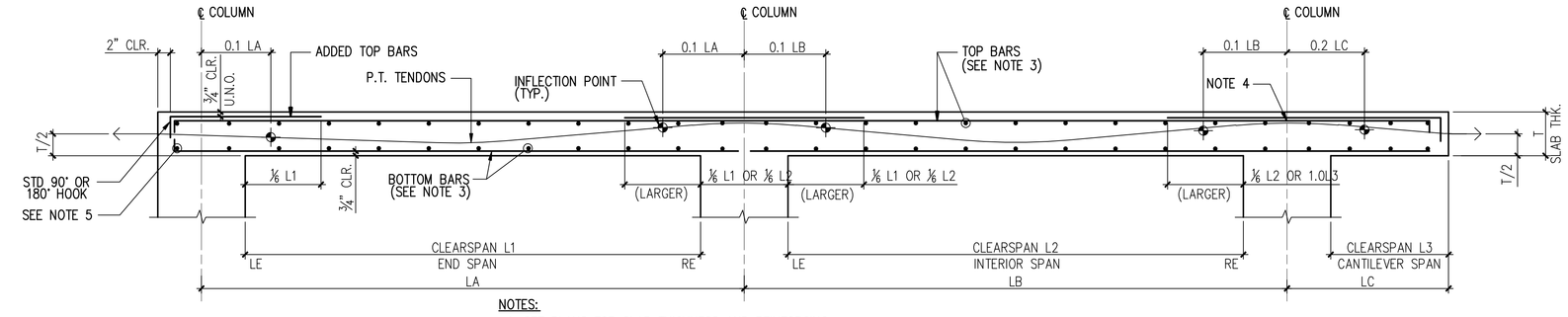


NOTES:
1. SEE PLANS FOR SLAB THICKNESS AND REINFORCING.
2. TENDON HIGH AND LOW POINTS SHALL BE BASED ON CLEAR COVERS INDICATED ABOVE UNLESS NOTED OTHERWISE ON PLAN.
3. PROVIDE CONTINUOUS TOP AND BOTTOM REINFORCING MAT EACH WAY AS INDICATED ON PLAN.
4. IF CANTILEVER LENGTH, LC, IS LESS THAN 3'-0", LOCATE TENDON AT T/2 AT ADJACENT SUPPORT. OTHERWISE, FOLLOW NOTE 2.
5. A MINIMUM OF TWO BOTTOM BARS SHALL TERMINATE WITH HOOKS INTO EXTERIOR COLUMNS AND CONTINUE THROUGH INTERIOR COLUMNS.

## 1 / S562 TWO WAY POST-TENSIONED FLAT PLATE BAR BENDING AND PLACING DETAIL
N.T.S.

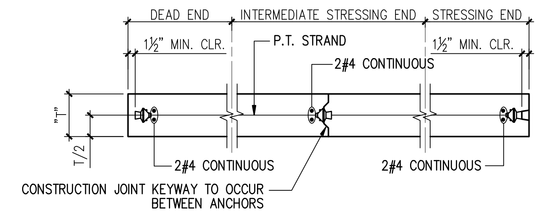


NOTES:
1. STRESSING POCKET OR CONTINUOUS POUR STOP AT STRESSING END AT CONTRACTOR'S OPTION WITH ENGINEERS APPROVAL.
2. AFTER STRESSING, COAT STRAND HARDWARE WITH RUST PREVENTIVE PAINT BEFORE CONCRETING OR DRYPACKING GROMMET HOLE.
3. STRANDS SHALL BE ADEQUATELY SUPPORTED TO MAINTAIN DESIGN PROFILE.
4. REMOVE EXCESS STRAND 3/4" BELOW SURFACE OF CONCRETE AFTER STRESSING AND WITH ENGINEERS AUTHORIZATION.
5. SEE 3/S562 FOR ADDITIONAL ANCHORAGE REINFORCEMENT REQUIRED AT BANDED TENDONS.

## 2 / S562 TYPICAL SLAB POST-TENSIONING
N.T.S.

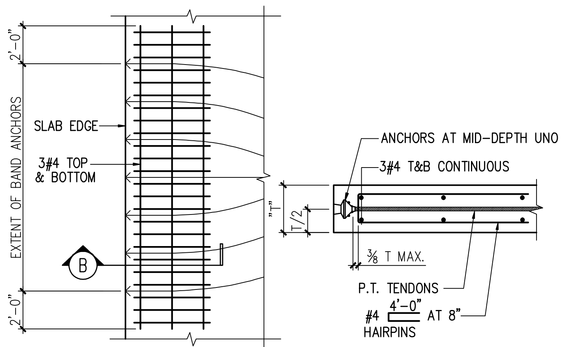


A PLAN

B SECTION

NOTE: ANCHORAGE REINFORCEMENT REQUIRED AT STRESSING END, DEAD END AND ALL INTERMEDIATE STRESSING POINTS.

## 3 / S562 POST-TENSIONING BAND ANCHORAGE
N.T.S.

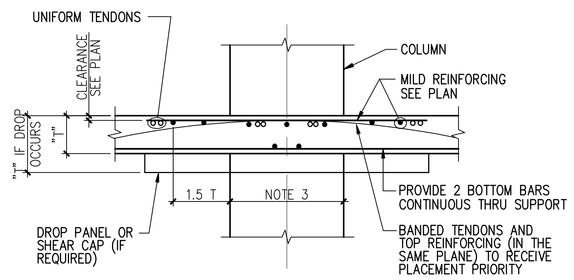


NOTES:
1. MILD REINFORCEMENT TO BE UNIFORMLY DISTRIBUTED WITHIN WIDTH OF 1.5T OUTSIDE THE COLUMN FACES WITH A MAXIMUM SPACING OF 12" O.C.
2. PROVIDE A MINIMUM OF TWO TENDONS THROUGH COLUMN IN EACH DIRECTION.
3. FOR COLUMN LENGTHS GREATER THAN 24" IN THE BANDED DIRECTION, PLACE TENDONS AT HIGH POINT INDICATED ON DRAWINGS FOR FULL LENGTH OF COLUMN.

## 4 / S562 TWO-WAY SLAB POST-TENSIONING AT COLUMN
N.T.S.

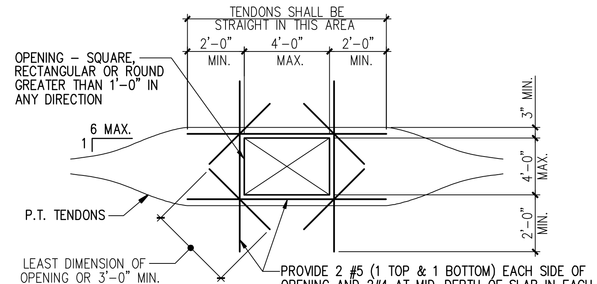


NOTE:
MAXIMUM NUMBER OF TENDONS OFFSET AT OPENING SHALL BE TWO TO EACH SIDE. IF MORE IS NECCESSARY, NOTIFY ENGINEER FOR SPECIFIC REQUIREMENTS.

## 5 / S562 SLAB POST-TENSIONING ARRANGEMENT AT OPENINGS
N.T.S.

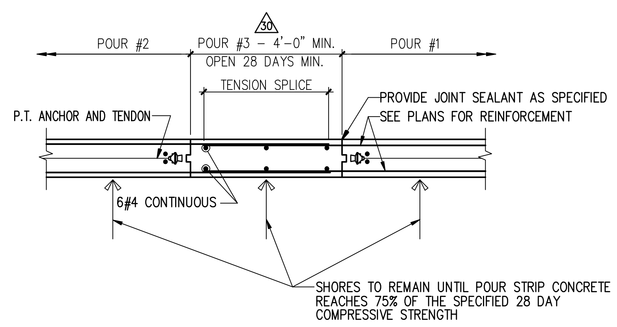


## 6 / S562 TYPICAL POST-TENSIONED SLAB POUR STRIP
N.T.S.

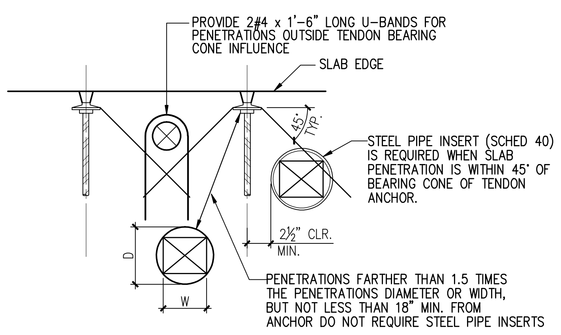


NOTE:
PROVIDE TRIM REINFORCEMENT PER DETAIL 4/S521.

## 7 / S562 PENETRATIONS AT TENDON ANCHORS
N.T.S.

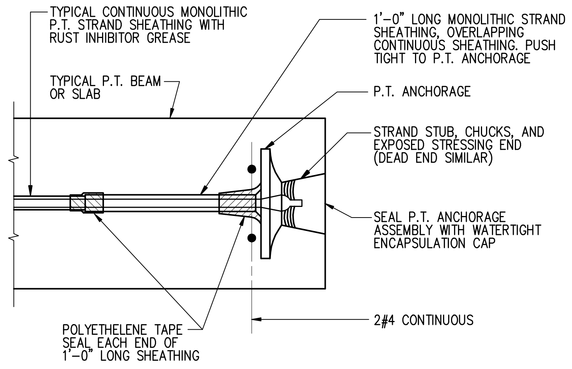


## 8 / S562 TYPICAL POST-TENSIONING ANCHORAGE AT ENCAPSULATED SLAB EDGES (REQ'D AT BALCONIES)
N.T.S.

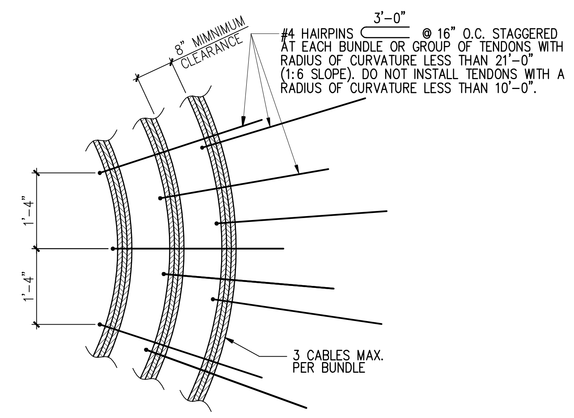


## 9 / S562 REINFORCEMENT AT OFFSET P.T. TENDONS
N.T.S.

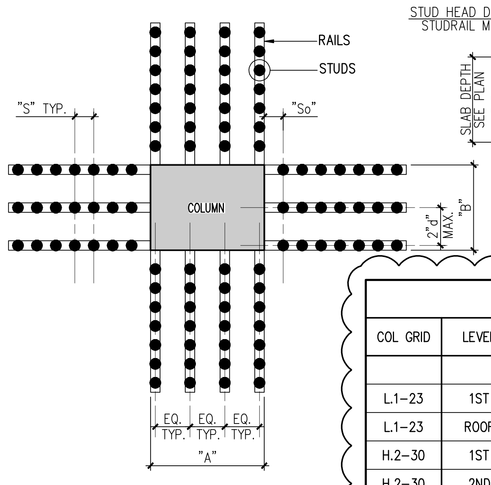


PLAN AT COLUMN

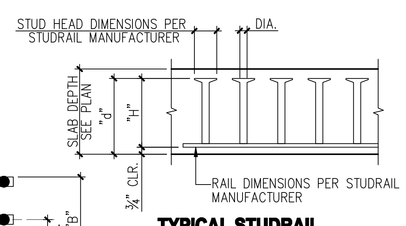


TYPICAL STUDRAIL

**STUDRAIL SCHEDULE**

| COL GRID | LEVEL | MARK | "A" FACE # OF RAILS | "B" FACE # OF RAILS | # OF STUDS PER RAIL | STUD DIA | So | S | H | d |
|---|---|---|---|---|---|---|---|---|---|---|
| | | SH-1 | 3 | 3 | 7 | ¾" | 3" | 3" | 6½" | 7¼" |
| L.1-23 | 1ST | – | 3 | 3 | 7 | ¾" | 3¾" | 4¾" | 9½" | 10¼" |
| L.1-23 | ROOF | – | 3 | 3 | 8 | ¾" | 2⅝" | 3¼" | 6½" | 7¼" |
| H.2-30 | 1ST | – | 3 | 3 | 8 | ¾" | 3¾" | 4¾" | 9½" | 10¼" |
| H.2-30 | 2ND | – | 3 | 3 | 8 | ¾" | 3¼" | 4⅛" | 8¼" | 9" |
| H.2-30 | ROOF | – | 3 | 3 | 9 | ¾" | 2⅝" | 3¼" | 6½" | 7¼" |
| J-20,M-20 N-20 | 3RD | SH-1 | 3 | 3 | 7 | ¾" | 3" | 3¼" | 6½" | 7¼" |
| K-20,L-20 | 3RD | – | 3 | 3 | 9 | ½" | 2⅝" | 3¼" | 6½" | 7¼" |
| K-21,L-21 | 3RD | – | 3 | 3 | 11 | ½" | 2⅝" | 3¼" | 6½" | 7¼" |
| J-21,J-22 K-22,L-22 | 3RD | – | 3 | 3 | 8 | ½" | 2⅝" | 3¼" | 6½" | 7¼" |

4

NOTES:
1. INSTALL A MINIMUM OF 2 STUDRAILS PER COLUMN FACE.
2. WHERE EDGE OF SLAB IS FLUSH WITH COLUMN FACE, STUDRAILS SHALL BE INSTALLED AT LEAST 2" FROM SLAB EDGE. OTHERWISE, INSTALL A RAIL FLUSH WITH EACH EDGE OF THE COLUMN.
3. FOR RECTANGULAR COLUMNS, A > B.
4. SEE MARK ON PLANS FOR STUDRAIL LOCATIONS. INTERIOR COLUMNS SHALL HAVE RAILS ON 4 SIDES, EDGE COLUMNS SHALL HAVE RAILS ON 3 SIDES, AND CORNER COLUMNS SHALL HAVE RAILS ON 2 SIDES.

## 10 / S562 SHEAR REINFORCEMENT FOR SLABS
N.T.S.

PROPERTY OF THE UNITED STATES GOVERNMENT – FOR OFFICIAL USE ONLY. Do not remove this notice. Properly destroy documents when no longer needed.

GSA
GENERAL SERVICES ADMINISTRATION
77 FORSYTH STREET
SUITE 600
ATLANTA, GA 30303
TEL: (404)331-3200

AFRH The Premier Retirement Community for America's Veterans
JACOBS
PROJECT MANAGEMENT CONSULTANT TO THE GENERAL SERVICES ADMINISTRATION

YATES CONSTRUCTION

SFCS Architecture Engineering Planning Interiors

URS
URS CORPORATION
2020 K ST, NW
SUITE 300
WASHINGTON D.C. 20006

ISSUED FOR CONSTRUCTION

CERTIFICATIONS

DISTRICT OF COLUMBIA MARK W. ZIMPELMAN 8572 REGISTERED PROFESSIONAL ENGINEER 09/24/08

KEY PLAN

REVISION NOTES

| MARK | DATE | DESCRIPTION |
|---|---|---|
| 2A | 06/02/08 | LEVEL 3 SLAB & PENETRATIONS |
| | 06/02/08 | ISSUED FOR CONSTRUCTION |
| 3A | 07/21/08 | REVISED POUR STRIP LOCATION |
| 4A | 09/08/08 | RE-ISSUED FOR CONSTRUCTION |
| 4A | 09/24/08 | REVISION TO LEVEL 3 CONNECTOR |

DRAWING SCALE

CONTRACTORS

| | |
|---|---|
| A/E CON. NO. | GS-04P-07-EX-C-0099 |
| A/E TASK NO. | |
| CONS. CONTR. | |
| CONS. WORK | |
| PRIME A/E | |
| SUB A/E | |
| CONSTR. CON. | |

BUILDING

| | |
|---|---|
| NAME | ARMED FORCES RETIREMENT HOME |
| STREET | 1800 BEACH DRIVE |
| CITY/ST./ZIP | GULFPORT, MS 39507 |
| BUILDING NO. | |
| OTHER BUILDING NOs. | |
| FACILITY CODE | |

PROJECT

| | |
|---|---|
| PROJECT TITLE | ARMED FORCES RETIREMENT HOME GULFPORT, MISSISSIPPI |
| PROJECT DESCRIPTION | NEW CONSTRUCTION |
| PROJECT NO. | 31942982 |
| GSA PM | STEVEN SMITH |
| SUBMISSION | ISSUED FOR CONSTRUCTION |
| SUB. DATE | 09/08/2008 |

DRAWING

| | |
|---|---|
| DRAWING TITLE | POST-TENSIONED SLAB TYPICAL DETAILS |
| FILE NAME | S-562-N0095730.DWG |
| FLOOR NO. | 00 |
| DRAWN BY | JVS DATE DRAFTED: |
| CHECKED BY | MWZ SHEET SIZE: 34 X 44 |
| DRAWING NO. | 2A S 5 62 (DISCIPLINE SHEET TYPE SEQUENCE) |
| | SHEET 000 OF 000 |

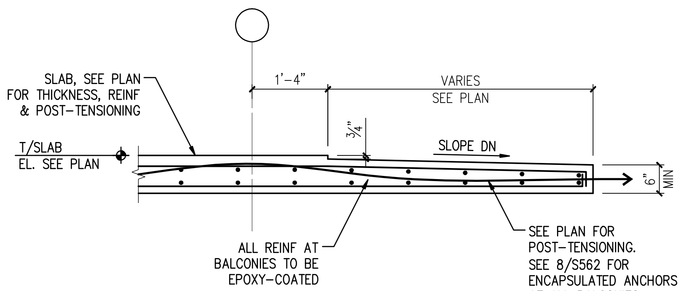


1 S563 **SECTION** 3/4" = 1'-0"

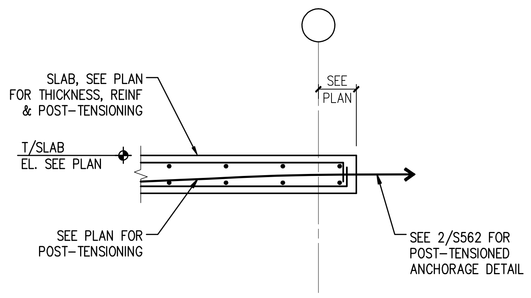


2 S563 **SECTION** 3/4" = 1'-0"

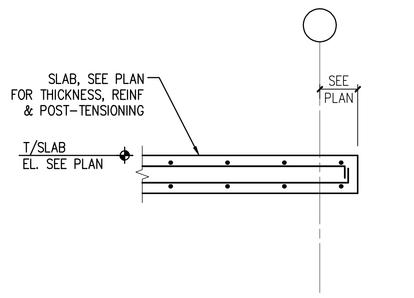


3 S563 **SECTION** 3/4" = 1'-0"

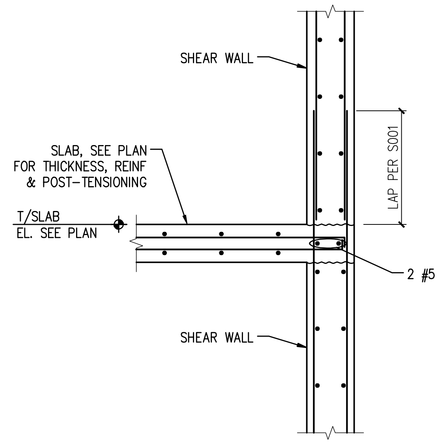


4 S563 **SECTION** 3/4" = 1'-0"

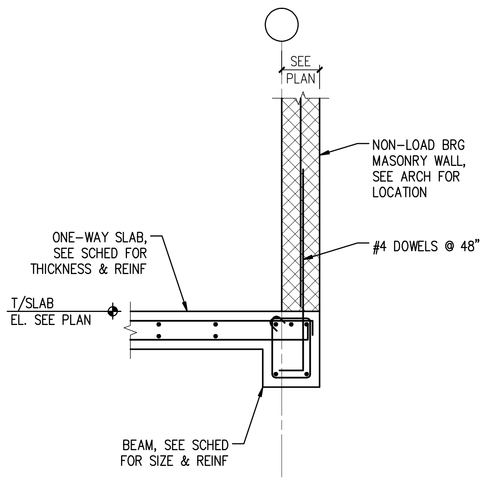


5 S563 **SECTION** 3/4" = 1'-0"

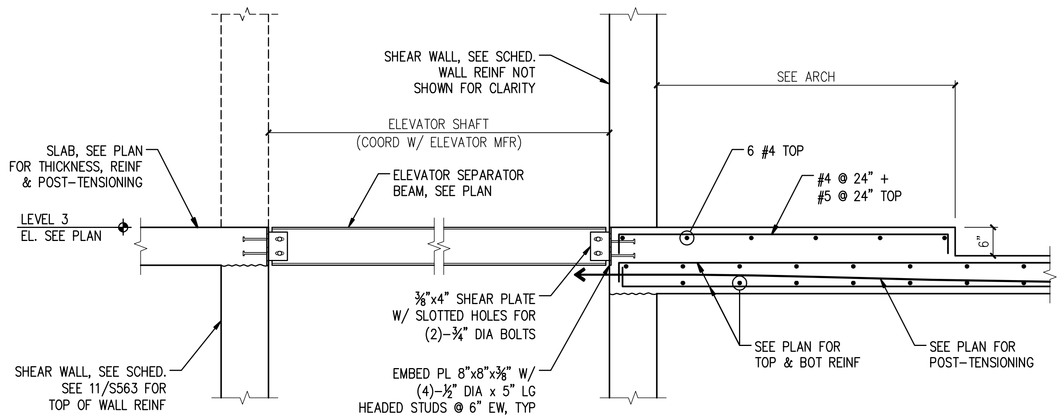


6 S563 **SECTION** 3/4" = 1'-0"

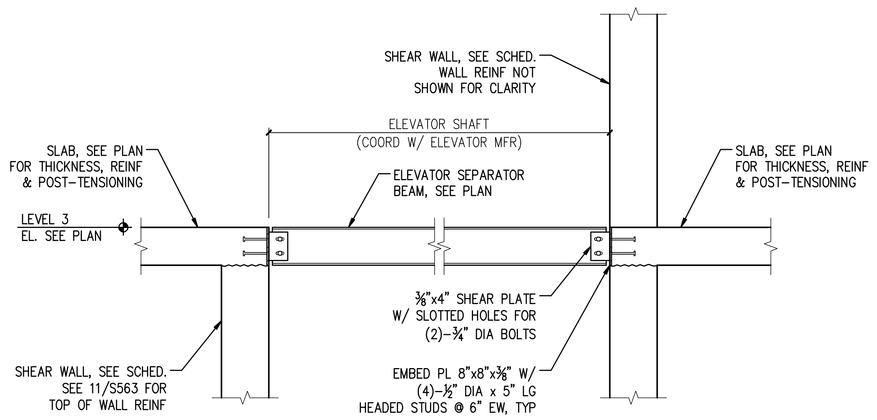


7 S563 **SECTION** 3/4" = 1'-0"

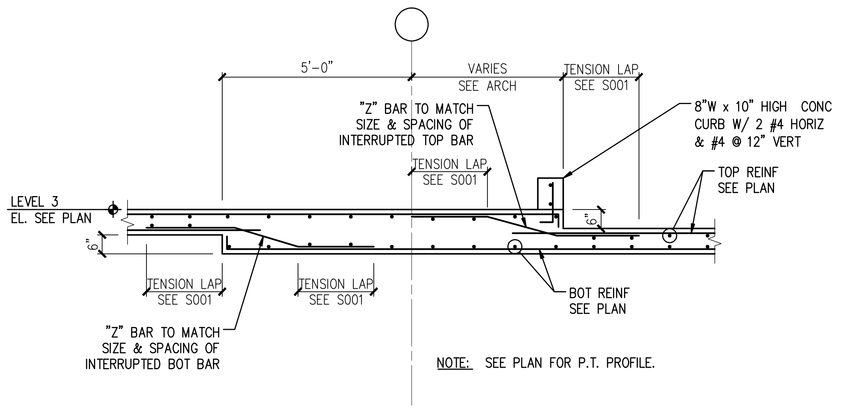


8 S563 **SECTION** 1/2" = 1'-0"

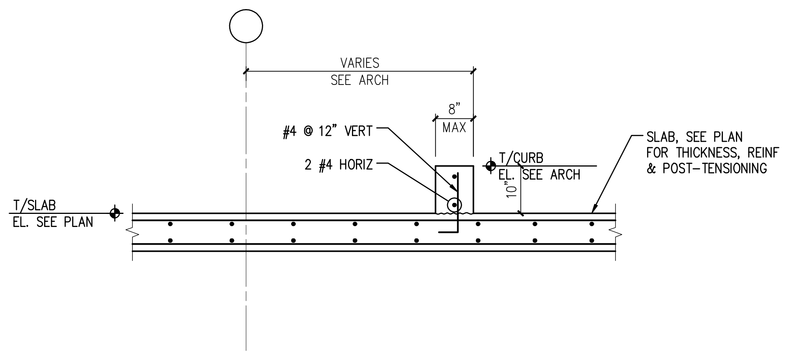


9 S563 **SECTION** 3/4" = 1'-0"

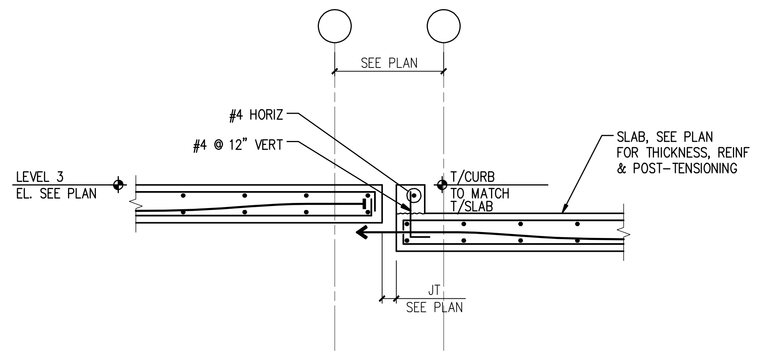


10 S563 **SECTION** 3/4" = 1'-0"

50

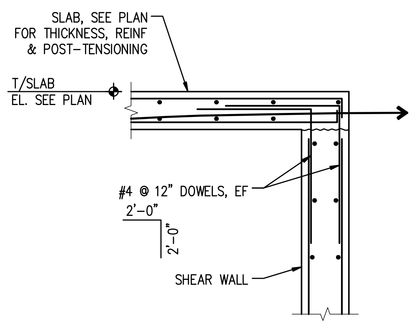


11 S563 **SECTION** 3/4" = 1'-0"

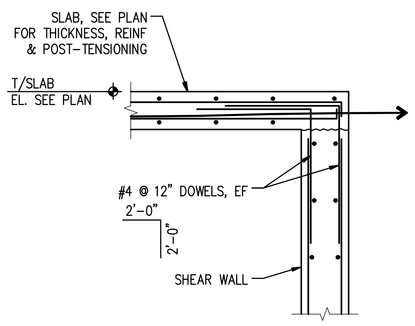


12 S563 **SECTION** 3/4" = 1'-0"

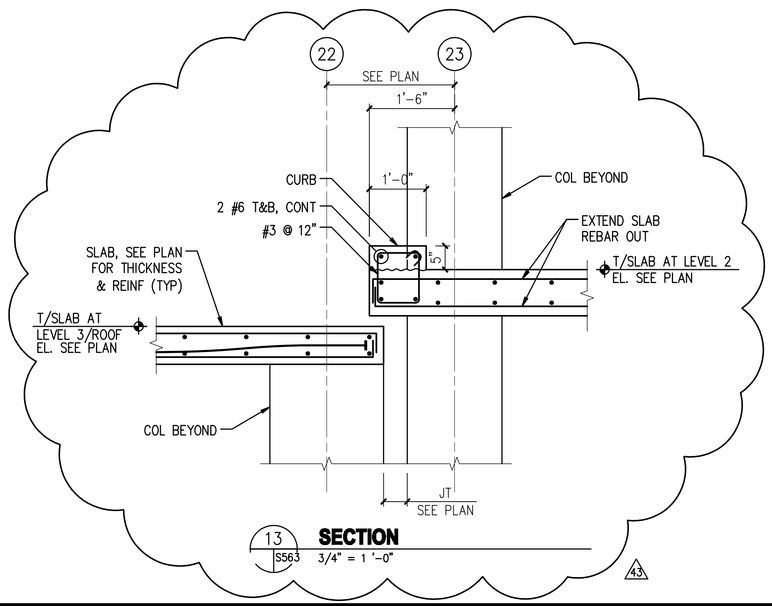


13 S563 **SECTION** 3/4" = 1'-0"

43

PROPERTY OF THE UNITED STATES GOVERNMENT – FOR OFFICIAL USE ONLY. Do not remove this notice. Properly destroy documents when no longer needed.

GSA
GENERAL SERVICES ADMINISTRATION
77 FORSYTH STREET
SUITE 600
ATLANTA, GA 30303
TEL: (404)331-3200

AFRH The Premier Retirement Community for America's Veterans
JE JACOBS
PROJECT MANAGEMENT CONSULTANT TO THE GENERAL SERVICES ADMINISTRATION

YATES CONSTRUCTION

SFCS Architecture Engineering Planning Interiors

URS
URS CORPORATION
2020 K ST, NW
SUITE 300
WASHINGTON D.C. 20006

ISSUED FOR CONSTRUCTION

CERTIFICATIONS

DISTRICT OF COLUMBIA
MARK W. ZIMPELMAN
8572
REGISTERED PROFESSIONAL ENGINEER
09/24/08

KEY PLAN

REVISION NOTES

| MARK | DATE | DESCRIPTION |
|---|---|---|
| 20 | 06/02/08 | LEVEL 3 SLAB & PENETRATIONS |
| | 06/02/08 | ISSUED FOR CONSTRUCTION |
| 30 | 07/21/08 | REVISED POUR STRIP LOCATION |
| 31 | 09/08/08 | RE-ISSUED FOR CONSTRUCTION |
| 43 | 09/24/08 | REVISION TO LEVEL 3 CONNECTOR |

GRAPHIC SCALE

CONTRACTORS

| | |
|---|---|
| A/E CON. NO. | GS-04P-07-EX-C-0099 |
| A/E TASK NO. | |
| CONS. CONTR. | |
| CONS. WORK | |
| PRIME A/E | |
| SUB A/E | |
| CONSTR. CON. | |

BUILDING

| | |
|---|---|
| NAME | ARMED FORCES RETIREMENT HOME |
| STREET | 1800 BEACH DRIVE |
| CITY/ST./ZIP | GULFPORT, MS 39507 |
| BUILDING NO. | |
| OTHER BUILDING NOs. | |
| FACILITY CODE | |

PROJECT

| | |
|---|---|
| PROJECT TITLE | ARMED FORCES RETIREMENT HOME GULFPORT, MISSISSIPPI |
| PROJECT DESCRIPTION | NEW CONSTRUCTION |
| PROJECT NO. | 31942982 |
| GSA PM | STEVEN SMITH |
| SUBMISSION | ISSUED FOR CONSTRUCTION |
| SUB. DATE | 09/08/2008 |

DRAWING

| | |
|---|---|
| DRAWING TITLE | POST-TENSIONED BEAM SECTIONS & DETAILS |
| FILE NAME | S-563-N0095730.DWG |
| FLOOR NO. | 00 |
| DRAWN BY | JVS DATE DRAFTED: |
| CHECKED BY | MWZ SHEET SIZE: 34 X 44 |
| DRAWING NO. | 20 S 5 63 (DISCIPLINE SHEET TYPE SEQUENCE) |
| | SHEET 000 OF 000 |

## COLUMN SCHEDULE

| LEVEL / COLUMN MARK | | B-1 | D-1 | E-1 | F-1 | G-1 | H-1 | J-1 | J.4-1 △2 | K-1 | M-1 | N-1 | P-1 | Q-1 | R-1 | S-1 | U.2-1 | W-1 | B-2 | D-2 | E-2 | F-2 | G-2 | H-2 | J-2 | J.4-2 △2 | K-2 | L-2 | L.8-2 | M-2 | N-2 | P-2 | Q-2 | R-2 | S-2 |
|---|---|---|---|---|---|---|---|---|---|---|---|---|---|---|---|---|---|---|---|---|---|---|---|---|---|---|---|---|---|---|---|---|---|---|---|---|
| PH ROOF | | | | | | | | | | | | | | | | | | | | | | | | | | | | | | | | | | | | |
| ROOF/ PH FL | SIZE | | | | | | | | | | | | | | | | | | | | | | | | | | | | | | | | | | | |
| | REINF | | | | | | | | | | | | | | | | | | | | | | | | | | | | | | | | | | | |
| | TIES | | | | | | | | | | | | | | | | | | | | | | | | | | | | | | | | | | | |
| | TYPE | | | | | | | | | | | | | | | | | | | | | | | | | | | | | | | | | | | |
| LEVEL EIGHT | SIZE | | | | | | | | | | | | | | | | | | | | | | | | | | | | | | | | | | | |
| | REINF | | | | | | | | | | | | | | | | | | | | | | | | | | | | | | | | | | | |
| | TIES | | | | | | | | | | | | | | | | | | | | | | | | | | | | | | | | | | | |
| | TYPE | | | | | | | | | | | | | | | | | | | | | | | | | | | | | | | | | | | |
| LEVEL SEVEN | SIZE | | | | | | | | | | | | | | | | | | | | | | | | | | | | | | | | | | | |
| | REINF | | | | | | | | | | | | | | | | | | | | | | | | | | | | | | | | | | | |
| | TIES | | | | | | | | | | | | | | | | | | | | | | | | | | | | | | | | | | | |
| | TYPE | | | | | | | | | | | | | | | | | | | | | | | | | | | | | | | | | | | |
| LEVEL SIX | SIZE | | | | | | | | | | | | | | | | | | | | | | | | | | | | | | | | | | | |
| | REINF | | | | | | | | | | | | | | | | | | | | | | | | | | | | | | | | | | | |
| | TIES | | | | | | | | | | | | | | | | | | | | | | | | | | | | | | | | | | | |
| | TYPE | | | | | | | | | | | | | | | | | | | | | | | | | | | | | | | | | | | |
| LEVEL FIVE | SIZE | | | | | | | | | | | | | | | | | | | | | | | | | | | | | | | | | | | |
| | REINF | | | | | | | | | | | | | | | | | | | | | | | | | | | | | | | | | | | |
| | TIES | | | | | | | | | | | | | | | | | | | | | | | | | | | | | | | | | | | |
| | TYPE | | | | | | | | | | | | | | | | | | | | | | | | | | | | | | | | | | | |
| LEVEL FOUR | SIZE | | | | | | | | | | | | | | | | | | | | | | | | | | | | | | | | | | | |
| | REINF | | | | | | | | | | | | | | | | | | | | | | | | | | | | | | | | | | | |
| | TIES | | | | | | | | | | | | | | | | | | | | | | | | | | | | | | | | | | | |
| | TYPE | | | | | | | | | | | | | | | | | | | | | | | | | | | | | | | | | | | |
| LEVEL THREE | SIZE | | | | | | | | | | | | | | | | | | | | | | | | | | | | | | | | | | | |
| | REINF | | | | | | | | | | | | | | | | | | | | | | | | | | | | | | | | | | | |
| | TIES | | | | | | | | | △4 | | | | | | | | | | | | | | | | | | | △4 | | | | | | | |
| | TYPE | | | | | | | | | | | | | | | | | | | | | | | | | | | | | | | | | | | |
| LEVEL TWO | SIZE | | | | | | | | 16"x16" | 16"x16" | | | | | | | | | | | | | | | | 16"x16" | 16"x16" | 16"x16" | 16"x16" | | | | | | | |
| | REINF | | | | | | | | 4 #8 | 4 #8 | | | | | | | | | | | | | | | | 4 #8 | 4 #8 | 4 #8 | 4 #8 | | | | | | | |
| | TIES | | | | | | | | #3 @ 16" | #3 @ 16" | | | | | | | | | | | | | | | | #3 @ 16" | #3 @ 16" | #3 @ 16" | #3 @ 16" | | | | | | | |
| | TYPE | | | | | | | △2 | T1 | T1 | △2 | | | | | | | | | | | | | | | T1 | T1 | T1 | T1 | | | | | | | |
| LEVEL ONE | SIZE | 24"x24" | 24"x24" | 24"x24" | 24"x24" | 24"x24" | 24"x24" | 24"x24" | | 24"x24" | 24"x24" | 24"x24" | 24"x24" | 24"x24" | 24"x24" | 24"x24" | 24"x24" | | 24"x24" | 24"x24" | 24"x24" | 24"x24" | 24"x24" | 24"x24" | 24"x24" | | 24"x24" | 24"x24" | | 24"x24" | 24"x24" | 24"x24" | 24"x24" | 24"x24" | 24"x24" |
| | REINF | 8 #8 | 8 #8 | 8 #8 | 8 #8 | 8 #8 | 8 #8 | 8 #8 | | 8 #8 | 8 #8 | 8 #8 | 8 #8 | 8 #8 | 8 #8 | 8 #8 | 8 #8 | | 8 #8 | 8 #8 | 8 #8 | 8 #8 | 8 #8 | 8 #8 | 8 #9 | | 8 #9 | 8 #9 | | 8 #8 | 8 #8 | 8 #8 | 8 #8 | 8 #8 | 8 #8 |
| | TIES | #3 @ 16" | #3 @ 16" | #3 @ 16" | #3 @ 16" | #3 @ 16" | #3 @ 16" | #3 @ 16" | | #3 @ 16" | #3 @ 16" | #3 @ 16" | #3 @ 16" | #3 @ 16" | #3 @ 16" | #3 @ 16" | #3 @ 16" | | #3 @ 16" | #3 @ 16" | #3 @ 16" | #3 @ 16" | #3 @ 16" | #3 @ 16" | #3 @ 18" | | #3 @ 18" | #3 @ 18" | | #3 @ 16" | #3 @ 16" | #3 @ 16" | #3 @ 16" | #3 @ 16" | #3 @ 16" |
| | TYPE | T2 | T2 | T2 | T2 | T2 | T2 | T2 | | T2 | T2 | T2 | T2 | T2 | T2 | T2 | T2 | | T2 | T2 | T2 | T2 | T2 | T2 | T2 | | T2 | T2 | | T2 | T2 | T2 | T2 | T2 | T2 |
| GARAGE LEVEL | SIZE | 24"x24" | 24"x24" | 24"x24" | 24"x24" | 24"x24" | 24"x24" | 24"x24" | | 24"x24" | 24"x24" | 24"x24" | 24"x24" | 24"x24" | 24"x24" | 24"x24" | 24"x24" | 24"x24" | 24"x24" | 24"x24" | 24"x24" | 24"x24" | 24"x24" | 24"x24" | 24"x24" | | 24"x24" | 24"x24" | | 24"x24" | 24"x24" | 24"x24" | 24"x24" | 24"x24" | 24"x24" |
| | REINF | 8 #8 | 8 #8 | 8 #8 | 8 #8 | 8 #8 | 8 #8 | 8 #8 | | 8 #8 | 8 #8 | 8 #8 | 8 #8 | 8 #8 | 8 #8 | 8 #8 | 8 #8 | 8 #8 | 8 #8 | 8 #8 | 8 #8 | 8 #8 | 8 #8 | 8 #8 | 8 #9 | | 8 #9 | 8 #9 | | 8 #8 | 8 #8 | 8 #8 | 8 #8 | 8 #8 | 8 #8 |
| | TIES | #3 @ 10" | #3 @ 10" | #3 @ 10" | #3 @ 10" | #3 @ 10" | #3 @ 10" | #3 @ 10" | | #3 @ 10" | #3 @ 10" | #3 @ 10" | #3 @ 10" | #3 @ 10" | #3 @ 10" | #3 @ 10" | #3 @ 10" | #3 @ 10" | #3 @ 10" | #3 @ 10" | #3 @ 10" | #3 @ 10" | #3 @ 10" | #3 @ 10" | #3 @ 10" | | #3 @ 10" | #3 @ 10" | | #3 @ 10" | #3 @ 10" | #3 @ 10" | #3 @ 10" | #3 @ 10" | #3 @ 10" |
| | TYPE | T2 | T2 | T2 | T2 | T2 | T2 | T2 | | T2 | T2 | T2 | T2 | T2 | T2 | T2 | T2 | T2 | T2 | T2 | T2 | T2 | T2 | T2 | T2 | | T2 | T2 | | T2 | T2 | T2 | T2 | T2 | T2 |
| DOWELS | | 8 #8 | 8 #8 | 8 #8 | 8 #8 | 8 #8 | 8 #8 | 8 #8 | 4 #8 | 8 #8 | 8 #8 | 8 #8 | 8 #8 | 8 #8 | 8 #8 | 8 #8 | 8 #8 | 8 #8 | 8 #8 | 8 #8 | 8 #8 | 8 #8 | 8 #8 | 8 #8 | 8 #9 | 4 #8 | 8 #9 | 8 #9 | 4 #8 | 8 #8 | 8 #8 | 8 #8 | 8 #8 | 8 #8 | 8 #8 |
| REMARKS | | – | – | – | – | – | – | – | – | – | – | – | – | – | – | – | – | – | – | – | – | – | – | – | – | – | – | – | – | – | – | – | – | – | – | – |
| FOUNDATION SERVICE LOAD (k) | | 149 | 197 | 174 | 174 | 174 | 221 | 272 | – | 309 | 220 | 174 | 174 | 174 | 174 | 197 | 197 | 84 | 221 | 312 | 266 | 266 | 266 | 266 | 380 | – | 472 | 472 | – | 380 | 266 | 266 | 266 | 267 | 312 |

△2

## COLUMN SCHEDULE

| LEVEL / COLUMN MARK | | U.2-2 | W-2 | B-3 | D-3 | E-3 | F-3 | G-3 | H-3 | J-3 | J.4-3 △2 | K-3 | L-3 | L.8-3 | M-3 | N-3.2 | P-3.2 | Q-3.2 | R-3.2 | S-3.2 | U.2-3 | W-3 | J.4-3.9 △2 | K-3.9 | L-3.9 | L.8-3.9 | B-4 | D-4 | E-4 | F-4 | G-4 | H-4 | J-4 | L-4 | M-4 |
|---|---|---|---|---|---|---|---|---|---|---|---|---|---|---|---|---|---|---|---|---|---|---|---|---|---|---|---|---|---|---|---|---|---|---|---|
| PH ROOF | | | | | | | | | | | | | | | | | | | | | | | | | | | | | | | | | | | |
| ROOF/ PH FL | SIZE | | | | | | | | | | | | | | | | | | | | | | | | | | | | | | | | | | |
| | REINF | | | | | | | | | | | | | | | | | | | | | | | | | | | | | | | | | | |
| | TIES | | | | | | | | | | | | | | | | | | | | | | | | | | | | | | | | | | |
| | TYPE | | | | | | | | | | | | | | | | | | | | | | | | | | | | | | | | | | |
| LEVEL EIGHT | SIZE | | | | | | | | | | | | | | | | | | | | | | | | | | | 16"x16" | 16"x16" | 16"x16" | 16"x16" | 16"x16" | 16"x16" | 16"x16" | 16"x16" |
| | REINF | | | | | | | | | | | | | | | | | | | | | | | | | | | 4 #8 | 4 #8 | 4 #8 | 4 #8 | 4 #8 | 4 #8 | 4 #8 | 4 #8 |
| | TIES | | | | | | | | | | | | | | | | | | | | | | | | | | | #3 @ 16" | #3 @ 16" | #3 @ 16" | #3 @ 16" | #3 @ 16" | #3 @ 16" | #3 @ 16" | #3 @ 16" |
| | TYPE | | | | | | | | | | | | | | | | | | | | | | | | | | | T1 | T1 | T1 | T1 | T1 | T1 | T1 | T1 |
| LEVEL SEVEN | SIZE | | | | | | | | | | | | | | | | | | | | | | | | | | | 16"x16" | 16"x16" | 16"x16" | 16"x16" | 16"x16" | 16"x16" | 16"x16" | 16"x16" |
| | REINF | | | | | | | | | | | | | | | | | | | | | | | | | | | 4 #8 | 4 #8 | 4 #8 | 4 #8 | 4 #8 | 4 #8 | 4 #8 | 4 #8 |
| | TIES | | | | | | | | | | | | | | | | | | | | | | | | | | | #3 @ 16" | #3 @ 16" | #3 @ 16" | #3 @ 16" | #3 @ 16" | #3 @ 16" | #3 @ 16" | #3 @ 16" |
| | TYPE | | | | | | | | | | | | | | | | | | | | | | | | | | | T1 | T1 | T1 | T1 | T1 | T1 | T1 | T1 |
| LEVEL SIX | SIZE | | | | | | | | | | | | | | | | | | | | | | | | | | | 16"x16" | 16"x16" | 16"x16" | 16"x16" | 16"x16" | 16"x16" | 16"x16" | 16"x16" |
| | REINF | | | | | | | | | | | | | | | | | | | | | | | | | | | 4 #8 | 4 #8 | 4 #8 | 4 #8 | 4 #8 | 4 #8 | 4 #8 | 4 #8 |
| | TIES | | | | | | | | | | | | | | | | | | | | | | | | | | | #3 @ 16" | #3 @ 16" | #3 @ 16" | #3 @ 16" | #3 @ 16" | #3 @ 16" | #3 @ 16" | #3 @ 16" |
| | TYPE | | | | | | | | | | | | | | | | | | | | | | | | | | | T1 | T1 | T1 | T1 | T1 | T1 | T1 | T1 |
| LEVEL FIVE | SIZE | | | | | | | | | | | | | | | | | | | | | | | | | | | 16"x16" | 16"x16" | 16"x16" | 16"x16" | 16"x16" | 16"x16" | 16"x16" | 16"x16" |
| | REINF | | | | | | | | | | | | | | | | | | | | | | | | | | | 4 #8 | 4 #8 | 4 #8 | 4 #8 | 4 #8 | 4 #8 | 4 #8 | 4 #8 |
| | TIES | | | | | | | | | | | | | | | | | | | | | | | | | | | #3 @ 16" | #3 @ 16" | #3 @ 16" | #3 @ 16" | #3 @ 16" | #3 @ 16" | #3 @ 16" | #3 @ 16" |
| | TYPE | | | | | | | | | | | | | | | | | | | | | | | | | | | T1 | T1 | T1 | T1 | T1 | T1 | T1 | T1 |
| LEVEL FOUR | SIZE | | | | | | | | | | | | | | | | | | | | | | | | | | | 16"x16" | 16"x16" | 16"x16" | 16"x16" | 16"x16" | 16"x16" | 16"x16" | 16"x16" |
| | REINF | | | | | | | | | | | | | | | | | | | | | | | | | | | 4 #8 | 4 #8 | 4 #8 | 4 #8 | 4 #8 | 4 #8 | 4 #8 | 4 #8 |
| | TIES | | | | | | | | | | | | | | | | | | | | | | | | | | | #3 @ 16" | #3 @ 16" | #3 @ 16" | #3 @ 16" | #3 @ 16" | #3 @ 16" | #3 @ 16" | #3 @ 16" |
| | TYPE | | | | | | | | | | | | | | | | | | | | | | | | | | | T1 | T1 | T1 | T1 | T1 | T1 | T1 | T1 |
| LEVEL THREE | SIZE | | | | | | | | | | | | | | | | | | | | | | | | | | | 16"x16" | 16"x16" | 16"x16" | 16"x16" | 16"x16" | 16"x16" | 16"x16" | 16"x16" |
| | REINF | | | | | | | | | | | | | | | | | | | | | | | | | | | 4 #8 | 4 #8 | 4 #8 | 4 #8 | 4 #8 | 4 #8 | 4 #8 | 4 #8 |
| | TIES | | | | | | | | | | | | | △4 | | | | | | | | | △2 | | | △4 | | #3 @ 16" | #3 @ 16" | #3 @ 16" | #3 @ 16" | #3 @ 16" | #3 @ 16" | #3 @ 16" | #3 @ 16" |
| | TYPE | | | | | | | | | | | | | | | | | | | | | | | | | | | T1 | T1 | T1 | T1 | T1 | T1 | T1 | T1 |
| LEVEL TWO | SIZE | | | | | | | | | | 16"x16" | 16"x16" | 16"x16" | 16"x16" | | | | | | | | | 16"x16" | 16"x16" | 16"x16" | 16"x16" | | 16"x16" | 16"x16" | 16"x16" | 16"x16" | 16"x16" | 16"x16" | 16"x16" | 16"x16" |
| | REINF | | | | | | | | | | 4 #8 | 4 #8 | 4 #8 | 4 #8 | | | | | | | | | 4 #8 | 4 #8 | 4 #8 | 4 #8 | | 4 #8 | 4 #8 | 4 #8 | 4 #8 | 4 #8 | 4 #8 | 4 #8 | 4 #8 |
| | TIES | | | | | | | | | | #3 @ 16" | #3 @ 16" | #3 @ 16" | #3 @ 16" | | | | | | | | | #3 @ 16" | #3 @ 16" | #3 @ 16" | #3 @ 16" | | #3 @ 16" | #3 @ 16" | #3 @ 16" | #3 @ 16" | #3 @ 16" | #3 @ 16" | #3 @ 16" | #3 @ 16" |
| | TYPE | | | | | | | | | | T1 | T1 | T1 | T1 | | | | | | | | | T1 | T1 | T1 | T1 | | T1 | T1 | T1 | T1 | T1 | T1 | T1 | T1 |
| LEVEL ONE | SIZE | 24"x24" | | 24"x24" | 24"x24" | 24"x24" | 24"x24" | 24"x24" | 24"x24" | 24"x24" | | 24"x24" | 24"x24" | | 24"x24" | 24"x24" | 24"x24" | 24"x24" | 24"x24" | 24"x24" | 24"x24" | | | | | | 24"x24" | 24"x24" | 24"x24" | 24"x24" | 24"x24" | 24"x24" | 24"x24" | 24"x24" | 24"x24" |
| | REINF | 8 #8 | | 8 #8 | 8 #8 | 8 #8 | 8 #8 | 8 #8 | 8 #8 | 8 #8 | | 8 #9 | 8 #9 | | 8 #9 | 8 #8 | 8 #8 | 8 #8 | 8 #8 | 8 #8 | 8 #8 | | | | | | 8 #8 | 12 #8 | 12 #8 | 12 #8 | 12 #8 | 12 #8 | 12 #9 | 12 #8 | 12 #8 |
| | TIES | #3 @ 16" | | #3 @ 16" | #3 @ 16" | #3 @ 16" | #3 @ 16" | #3 @ 16" | #3 @ 16" | #3 @ 16" | | #3 @ 18" | #3 @ 18" | | #3 @ 18" | #3 @ 16" | #3 @ 16" | #3 @ 16" | #3 @ 16" | #3 @ 16" | #3 @ 16" | | | | | | #3 @ 16" | #3 @ 16" | #3 @ 16" | #3 @ 16" | #3 @ 16" | #3 @ 16" | #3 @ 18" | #3 @ 16" | #3 @ 16" |
| | TYPE | T2 | | T2 | T2 | T2 | T2 | T2 | T2 | T2 | | T2 | T2 | | T2 | T2 | T2 | T2 | T2 | T2 | T2 | | | | | | T2 | T3 | T3 | T3 | T3 | T3 | T3 | T3 | T3 |
| GARAGE LEVEL | SIZE | 24"x24" | 24"x24" | 24"x24" | 24"x24" | 24"x24" | 24"x24" | 24"x24" | 24"x24" | 24"x24" | | 24"x24" | 24"x24" | | 24"x24" | 24"x24" | 24"x24" | 24"x24" | 24"x24" | 24"x24" | 24"x24" | 24"x24" | | | | | 24"x24" | 24"x24" | 24"x24" | 24"x24" | 24"x24" | 24"x24" | 24"x24" | 24"x24" | 24"x24" |
| | REINF | 8 #8 | 8 #8 | 8 #8 | 8 #8 | 8 #8 | 8 #8 | 8 #8 | 8 #8 | 8 #8 | | 8 #9 | 8 #9 | | 8 #9 | 8 #8 | 8 #8 | 8 #8 | 8 #8 | 8 #8 | 8 #8 | 8 #8 | | | | | 8 #8 | 12 #8 | 12 #8 | 12 #8 | 12 #8 | 12 #8 | 12 #9 | 12 #8 | 12 #8 |
| | TIES | #3 @ 10" | #3 @ 10" | #3 @ 10" | #3 @ 10" | #3 @ 10" | #3 @ 10" | #3 @ 10" | #3 @ 10" | #3 @ 10" | | #3 @ 10" | #3 @ 10" | | #3 @ 10" | #3 @ 10" | #3 @ 10" | #3 @ 10" | #3 @ 10" | #3 @ 10" | #3 @ 10" | #3 @ 10" | | | | | #3 @ 10" | #3 @ 10" | #3 @ 10" | #3 @ 10" | #3 @ 10" | #3 @ 10" | #3 @ 10" | #3 @ 10" | #3 @ 10" |
| | TYPE | T2 | T2 | T2 | T2 | T2 | T2 | T2 | T2 | T2 | | T2 | T2 | | T2 | T2 | T2 | T2 | T2 | T2 | T2 | T2 | | | | | T2 | T3 | T3 | T3 | T3 | T3 | T3 | T3 | T3 |
| DOWELS | | 8 #8 | 8 #8 | 8 #8 | 8 #8 | 8 #8 | 8 #8 | 8 #8 | 8 #8 | 8 #8 | 4 #8 | 8 #9 | 8 #9 | 4 #8 | 8 #9 | 8 #8 | 8 #8 | 8 #8 | 8 #8 | 8 #8 | 8 #8 | 8 #8 | 4 #6 | 4 #6 | 4 #6 | 4 #6 | 8 #8 | 12 #8 | 12 #8 | 12 #8 | 12 #8 | 12 #8 | 12 #9 | 12 #8 | 12 #8 |
| REMARKS | | – | – | – | – | – | – | – | – | – | – | – | – | – | – | – | – | – | – | – | – | – | – | – | – | – | – | – | – | – | – | – | – | – | – | – |
| FOUNDATION SERVICE LOAD (k) | | 281 | 165 | 221 | 312 | 267 | 267 | 267 | 267 | 380 | – | 472 | 472 | – | 380 | 267 | 267 | 267 | 267 | 312 | 264 | 165 | – | – | – | – | 221 | 542 | 571 | 571 | 571 | 571 | 611 | 736 | 682 |

△2

NOTES:
1. SERVICE LOADS INDICATED INCLUDE DEAD LOAD PLUS LIVE LOAD ONLY.
2. CONCRETE COMPRESSIVE STRENGTH ($f'c$) EQUALS 5000 PSI FOR ALL COLUMNS, UNO.
3. REFER TO S-501 FOR COLUMN DETAILS.
4. REFER TO S-501 FOR MINIMUM COMPRESSION DEVELOPMENT LENGTH TABLE FOR COLUMN DOWELS.
5. REFER TO S-501 FOR MINIMUM COMPRESSION LAP SPLICE LENGTH TABLE FOR COLUMN VERTICAL BARS.

△2

PROPERTY OF THE UNITED STATES GOVERNMENT – FOR OFFICIAL USE ONLY. Do not remove this notice. Properly destroy documents when no longer needed.

GENERAL SERVICES ADMINISTRATION
77 FORSYTH STREET
SUITE 600
ATLANTA, GA 30303
TEL: (404)331-3200

AFRH The Premier Retirement Community for America's Veterans

JACOBS
PROJECT MANAGEMENT CONSULTANT TO THE GENERAL SERVICES ADMINISTRATION

YATES CONSTRUCTION

SFCS Architecture Engineering Planning Interiors

URS CORPORATION
2020 K ST, NW
SUITE 300
WASHINGTON D.C. 20006

ISSUED FOR CONSTRUCTION

CERTIFICATIONS

DISTRICT OF COLUMBIA
MARK W. ZIMPELMAN
8572
REGISTERED PROFESSIONAL ENGINEER
09/08/08

KEY PLAN

REVISION NOTES

| MARK | DATE | DESCRIPTION |
|---|---|---|
| | 01/15/08 | COLUMN FOUNDATION SUBMISSION |
| | 01/15/08 | ISSUED FOR CONSTRUCTION |
| △2 | 02/27/08 | ADD COLUMN REINF AND DETAILS |
| △4 | 04/23/08 | COLUMN REINF FOR UPPER LEVELS |
| △2 | 06/10/08 | REVISE OPENINGS & COLUMN SIZE |
| △3 | 09/08/08 | RE-ISSUED FOR CONSTRUCTION |

DRAWING SCALE

CONTRACTORS

| | |
|---|---|
| A/E CON. NO. | GS-04P-07-EX-C-0099 |
| A/E TASK NO. | |
| CONS. CONTR. | |
| CONS. WORK | |
| PRIME A/E | |
| SUB A/E | |
| CONSTR. CON. | |

BUILDING

| | |
|---|---|
| NAME | ARMED FORCES RETIREMENT HOME |
| STREET | 1800 BEACH DRIVE |
| CITY/ST./ZIP | GULFPORT, MS 39507 |
| BUILDING NO. | |
| OTHER BUILDING NOs. | |
| FACILITY CODE | |

PROJECT

| | |
|---|---|
| PROJECT TITLE | ARMED FORCES RETIREMENT HOME GULFPORT, MISSISSIPPI |
| PROJECT DESCRIPTION | NEW CONSTRUCTION |
| PROJECT NO. | 31942982 |
| GSA PM | STEVEN SMITH |
| SUBMISSION | ISSUED FOR CONSTRUCTION |
| SUB. DATE | 09/08/2008 |

DRAWING

| | |
|---|---|
| DRAWING TITLE | COLUMN SCHEDULE |
| FILE NAME | S-601-N0095730.DWG |
| FLOOR NO. | 00 |
| DRAWN BY | JVS DATE DRAFTED: |
| CHECKED BY | MWZ SHEET SIZE: 34 X 44 |
| DRAWING NO. | S 6 01 (DISCIPLINE SHEET TYPE SEQUENCE) |
| | SHEET 000 OF 000 |

**COLUMN SCHEDULE**

| LEVEL / PH ROOF | COLUMN MARK | N-4 | P-4 | Q-4 | R-4 | S-4 | U.2-4 | W-4 | D-5 | E-5 | F-5 | G-5 | H-5 | J-5 | L-5 | M-5 | N-5 | P-5 | Q-5 | R-5 | S-5 | W-5 | A-5.8 | V-5.8 | W-5.8 | B-6 | D-6 | E-6 | F-6 | G-6 | H-6 | J-6 | L-6 | M-6 | N-6 |
|---|---|---|---|---|---|---|---|---|---|---|---|---|---|---|---|---|---|---|---|---|---|---|---|---|---|---|---|---|---|---|---|---|---|---|---|
| ROOF/ PH FL | SIZE | | | | | | | | 16"x16" | 16"x16" | 16"x16" | 16"x16" | 16"x16" | 16"x16" | 16"x16" | | | | | | | | 20"x20" | 20"x20" | | | 16"x16" | 16"x16" | 16"x16" | 16"x16" | 16"x16" | 16"x16" | 16"x16" | | |
| | REINF | | | | | | | | 4 #8 | 4 #8 | 4 #8 | 4 #8 | 4 #8 | 4 #8 | 4 #8 | | | | | | | | 8 #7 | 8 #7 | | | 4 #8 | 4 #8 | 4 #8 | 4 #8 | 4 #8 | 4 #8 | 4 #8 | | |
| | TIES | | | | | | | | #3 @ 16" | #3 @ 16" | #3 @ 16" | #3 @ 16" | #3 @ 16" | #3 @ 16" | #3 @ 16" | | | | | | | | #3 @14" | #3 @14" | | | #3 @ 16" | #3 @ 16" | #3 @ 16" | #3 @ 16" | #3 @ 16" | #3 @ 16" | #3 @ 16" | | |
| | TYPE | | | | | | | | T1 | T1 | T1 | T1 | T1 | T1 | T1 | | | | | | | | T2 | T2 | | | T1 | T1 | T1 | T1 | T1 | T1 | T1 | | |
| LEVEL EIGHT | SIZE | 16"x16" | 16"x16" | 16"x16" | 16"x16" | 16"x16" | | | 16"x16" | 16"x16" | 16"x16" | 16"x16" | 16"x16" | 16"x16" | 16"x16" | 16"x16" | 16"x16" | 16"x16" | 16"x16" | 16"x16" | 16"x16" | | 20"x20" | 20"x20" | | | 16"x16" | 16"x16" | 16"x16" | 16"x16" | 16"x16" | 16"x16" | 16"x16" | 16"x16" | 16"x16" |
| | REINF | 4 #8 | 4 #8 | 4 #8 | 4 #8 | 4 #8 | | | 4 #8 | 4 #8 | 4 #8 | 4 #8 | 4 #8 | 4 #8 | 4 #8 | 4 #8 | 4 #8 | 4 #8 | 4 #8 | 4 #8 | 4 #8 | | 8 #7 | 8 #7 | | | 4 #8 | 4 #8 | 4 #8 | 4 #8 | 4 #8 | 4 #8 | 4 #8 | 4 #8 | 4 #8 |
| | TIES | #3 @ 16" | #3 @ 16" | #3 @ 16" | #3 @ 16" | #3 @ 16" | | | #3 @ 16" | #3 @ 16" | #3 @ 16" | #3 @ 16" | #3 @ 16" | #3 @ 16" | #3 @ 16" | #3 @ 16" | #3 @ 16" | #3 @ 16" | #3 @ 16" | #3 @ 16" | #3 @ 16" | | #3 @14" | #3 @14" | | | #3 @ 16" | #3 @ 16" | #3 @ 16" | #3 @ 16" | #3 @ 16" | #3 @ 16" | #3 @ 16" | #3 @ 16" | #3 @ 16" |
| | TYPE | T1 | T1 | T1 | T1 | T1 | | | T1 | T1 | T1 | T1 | T1 | T1 | T1 | T1 | T1 | T1 | T1 | T1 | T1 | | T2 | T2 | | | T1 | T1 | T1 | T1 | T1 | T1 | T1 | T1 | T1 |
| LEVEL SEVEN | SIZE | 16"x16" | 16"x16" | 16"x16" | 16"x16" | 16"x16" | | | 16"x16" | 16"x16" | 16"x16" | 16"x16" | 16"x16" | 16"x16" | 16"x16" | 16"x16" | 16"x16" | 16"x16" | 16"x16" | 16"x16" | 16"x16" | | 20"x20" | 20"x20" | | | 16"x16" | 16"x16" | 16"x16" | 16"x16" | 16"x16" | 16"x16" | 16"x16" | 16"x16" | 16"x16" |
| | REINF | 4 #8 | 4 #8 | 4 #8 | 4 #8 | 4 #8 | | | 4 #8 | 4 #8 | 4 #8 | 4 #8 | 4 #8 | 4 #8 | 4 #8 | 4 #8 | 4 #8 | 4 #8 | 4 #8 | 4 #8 | 4 #8 | | 8 #7 | 8 #7 | | | 4 #8 | 4 #8 | 4 #8 | 4 #8 | 4 #8 | 4 #8 | 4 #8 | 4 #8 | 4 #8 |
| | TIES | #3 @ 16" | #3 @ 16" | #3 @ 16" | #3 @ 16" | #3 @ 16" | | | #3 @ 16" | #3 @ 16" | #3 @ 16" | #3 @ 16" | #3 @ 16" | #3 @ 16" | #3 @ 16" | #3 @ 16" | #3 @ 16" | #3 @ 16" | #3 @ 16" | #3 @ 16" | #3 @ 16" | | #3 @14" | #3 @14" | | | #3 @ 16" | #3 @ 16" | #3 @ 16" | #3 @ 16" | #3 @ 16" | #3 @ 16" | #3 @ 16" | #3 @ 16" | #3 @ 16" |
| | TYPE | T1 | T1 | T1 | T1 | T1 | | | T1 | T1 | T1 | T1 | T1 | T1 | T1 | T1 | T1 | T1 | T1 | T1 | T1 | | T2 | T2 | | | T1 | T1 | T1 | T1 | T1 | T1 | T1 | T1 | T1 |
| LEVEL SIX | SIZE | 16"x16" | 16"x16" | 16"x16" | 16"x16" | 16"x16" | | | 16"x16" | 16"x16" | 16"x16" | 16"x16" | 16"x16" | 16"x16" | 16"x16" | 16"x16" | 16"x16" | 16"x16" | 16"x16" | 16"x16" | 16"x16" | | 20"x20" | 20"x20" | | | 16"x16" | 16"x16" | 16"x16" | 16"x16" | 16"x16" | 16"x16" | 16"x16" | 16"x16" | 16"x16" |
| | REINF | 4 #8 | 4 #8 | 4 #8 | 4 #8 | 4 #8 | | | 4 #8 | 4 #8 | 4 #8 | 4 #8 | 4 #8 | 4 #8 | 4 #8 | 4 #8 | 4 #8 | 4 #8 | 4 #8 | 4 #8 | 4 #8 | | 8 #7 | 8 #7 | | | 4 #8 | 4 #8 | 4 #8 | 4 #8 | 4 #8 | 4 #8 | 4 #8 | 4 #8 | 4 #8 |
| | TIES | #3 @ 16" | #3 @ 16" | #3 @ 16" | #3 @ 16" | #3 @ 16" | | | #3 @ 16" | #3 @ 16" | #3 @ 16" | #3 @ 16" | #3 @ 16" | #3 @ 16" | #3 @ 16" | #3 @ 16" | #3 @ 16" | #3 @ 16" | #3 @ 16" | #3 @ 16" | #3 @ 16" | | #3 @14" | #3 @14" | | | #3 @ 16" | #3 @ 16" | #3 @ 16" | #3 @ 16" | #3 @ 16" | #3 @ 16" | #3 @ 16" | #3 @ 16" | #3 @ 16" |
| | TYPE | T1 | T1 | T1 | T1 | T1 | | | T1 | T1 | T1 | T1 | T1 | T1 | T1 | T1 | T1 | T1 | T1 | T1 | T1 | | T2 | T2 | | | T1 | T1 | T1 | T1 | T1 | T1 | T1 | T1 | T1 |
| LEVEL FIVE | SIZE | 16"x16" | 16"x16" | 16"x16" | 16"x16" | 16"x16" | | | 16"x16" | 16"x16" | 16"x16" | 16"x16" | 16"x16" | 16"x16" | 16"x16" | 16"x16" | 16"x16" | 16"x16" | 16"x16" | 16"x16" | 16"x16" | | 20"x20" | 20"x20" | | | 16"x16" | 16"x16" | 16"x16" | 16"x16" | 16"x16" | 16"x16" | 16"x16" | 16"x16" | 16"x16" |
| | REINF | 4 #8 | 4 #8 | 4 #8 | 4 #8 | 4 #8 | | | 4 #8 | 4 #8 | 4 #8 | 4 #8 | 4 #8 | 4 #8 | 4 #8 | 4 #8 | 4 #8 | 4 #8 | 4 #8 | 4 #8 | 4 #8 | | 8 #7 | 8 #7 | | | 4 #8 | 4 #8 | 4 #8 | 4 #8 | 4 #8 | 4 #8 | 4 #8 | 4 #8 | 4 #8 |
| | TIES | #3 @ 16" | #3 @ 16" | #3 @ 16" | #3 @ 16" | #3 @ 16" | | | #3 @ 16" | #3 @ 16" | #3 @ 16" | #3 @ 16" | #3 @ 16" | #3 @ 16" | #3 @ 16" | #3 @ 16" | #3 @ 16" | #3 @ 16" | #3 @ 16" | #3 @ 16" | #3 @ 16" | | #3 @14" | #3 @14" | | | #3 @ 16" | #3 @ 16" | #3 @ 16" | #3 @ 16" | #3 @ 16" | #3 @ 16" | #3 @ 16" | #3 @ 16" | #3 @ 16" |
| | TYPE | T1 | T1 | T1 | T1 | T1 | | | T1 | T1 | T1 | T1 | T1 | T1 | T1 | T1 | T1 | T1 | T1 | T1 | T1 | | T2 | T2 | | | T1 | T1 | T1 | T1 | T1 | T1 | T1 | T1 | T1 |
| LEVEL FOUR | SIZE | 16"x16" | 16"x16" | 16"x16" | 16"x16" | 16"x16" | | | 16"x16" | 16"x16" | 16"x16" | 16"x16" | 16"x16" | 16"x16" | 16"x16" | 16"x16" | 16"x16" | 16"x16" | 16"x16" | 16"x16" | 16"x16" | | 20"x20" | 20"x20" | | | 16"x16" | 16"x16" | 16"x16" | 16"x16" | 16"x16" | 16"x16" | 16"x16" | 16"x16" | 16"x16" |
| | REINF | 4 #8 | 4 #8 | 4 #8 | 4 #8 | 4 #8 | | | 4 #8 | 4 #8 | 4 #8 | 4 #8 | 4 #8 | 4 #8 | 4 #8 | 4 #8 | 4 #8 | 4 #8 | 4 #8 | 4 #8 | 4 #8 | | 8 #7 | 8 #7 | | | 4 #8 | 4 #8 | 4 #8 | 4 #8 | 4 #8 | 4 #8 | 4 #8 | 4 #8 | 4 #8 |
| | TIES | #3 @ 16" | #3 @ 16" | #3 @ 16" | #3 @ 16" | #3 @ 16" | | | #3 @ 16" | #3 @ 16" | #3 @ 16" | #3 @ 16" | #3 @ 16" | #3 @ 16" | #3 @ 16" | #3 @ 16" | #3 @ 16" | #3 @ 16" | #3 @ 16" | #3 @ 16" | #3 @ 16" | | #3 @14" | #3 @14" | | | #3 @ 16" | #3 @ 16" | #3 @ 16" | #3 @ 16" | #3 @ 16" | #3 @ 16" | #3 @ 16" | #3 @ 16" | #3 @ 16" |
| | TYPE | T1 | T1 | T1 | T1 | T1 | | | T1 | T1 | T1 | T1 | T1 | T1 | T1 | T1 | T1 | T1 | T1 | T1 | T1 | | T2 | T2 | | | T1 | T1 | T1 | T1 | T1 | T1 | T1 | T1 | T1 |
| LEVEL THREE | SIZE | 16"x16" | 16"x16" | 16"x16" | 16"x16" | 16"x16" | | | 16"x16" | 16"x16" | 16"x16" | 16"x16" | 16"x16" | 16"x16" | 16"x16" | 16"x16" | 16"x16" | 16"x16" | 16"x16" | 16"x16" | 16"x16" | | 20"x20" | 20"x20" | | | 16"x16" | 16"x16" | 16"x16" | 16"x16" | 16"x16" | 16"x16" | 16"x16" | 16"x16" | 16"x16" |
| | REINF | 4 #8 | 4 #8 | 4 #8 | 4 #8 | 4 #8 | | | 4 #8 | 4 #8 | 4 #8 | 4 #8 | 4 #8 | 4 #8 | 4 #8 | 4 #8 | 4 #8 | 4 #8 | 4 #8 | 4 #8 | 4 #8 | | 8 #8 | 8 #8 | | | 4 #8 | 4 #8 | 4 #8 | 4 #8 | 4 #8 | 4 #8 | 4 #8 | 4 #8 | 4 #8 |
| | TIES | #3 @ 16" | #3 @ 16" | #3 @ 16" | #3 @ 16" | #3 @ 16" | | | #3 @ 16" | #3 @ 16" | #3 @ 16" | #3 @ 16" | #3 @ 16" | #3 @ 16" | #3 @ 16" | #3 @ 16" | #3 @ 16" | #3 @ 16" | #3 @ 16" | #3 @ 16" | #3 @ 16" | | #3 @ 16" | #3 @ 16" | | | #3 @ 16" | #3 @ 16" | #3 @ 16" | #3 @ 16" | #3 @ 16" | #3 @ 16" | #3 @ 16" | #3 @ 16" | #3 @ 16" |
| | TYPE | T1 | T1 | T1 | T1 | T1 | | | T1 | T1 | T1 | T1 | T1 | T1 | T1 | T1 | T1 | T1 | T1 | T1 | T1 | | T2 | T2 | | | T1 | T1 | T1 | T1 | T1 | T1 | T1 | T1 | T1 |
| LEVEL TWO | SIZE | 16"x16" | 16"x16" | 16"x16" | 16"x16" | 16"x16" | | | 16"x16" | 16"x16" | 16"x16" | 16"x16" | 16"x16" | 16"x16" | 16"x16" | 16"x16" | 16"x16" | 16"x16" | 16"x16" | 16"x16" | 16"x16" | | 20"x20" | 20"x20" | | | 16"x16" | 16"x16" | 16"x16" | 16"x16" | 16"x16" | 16"x16" | 16"x16" | 16"x16" | 16"x16" |
| | REINF | 4 #8 | 4 #8 | 4 #8 | 4 #8 | 4 #8 | | | 4 #8 | 8 #8 | 8 #8 | 8 #8 | 8 #8 | 4 #8 | 8 #8 | 4 #8 | 4 #8 | 4 #8 | 4 #8 | 4 #8 | 4 #8 | | 8 #8 | 8 #8 | | | 4 #8 | 8 #8 | 8 #8 | 8 #8 | 8 #8 | 4 #8 | 8 #8 | 4 #8 | 4 #8 |
| | TIES | #3 @ 16" | #3 @ 16" | #3 @ 16" | #3 @ 16" | #3 @ 16" | | | #3 @ 16" | #3 @ 16" | #3 @ 16" | #3 @ 16" | #3 @ 16" | #3 @ 16" | #3 @ 16" | #3 @ 16" | #3 @ 16" | #3 @ 16" | #3 @ 16" | #3 @ 16" | #3 @ 16" | | #3 @ 16" | #3 @ 16" | | | #3 @ 16" | #3 @ 16" | #3 @ 16" | #3 @ 16" | #3 @ 16" | #3 @ 16" | #3 @ 16" | #3 @ 16" | #3 @ 16" |
| | TYPE | T1 | T1 | T1 | T1 | T1 | | | T1 | T1 | T1 | T1 | T1 | T1 | T1 | T1 | T1 | T1 | T1 | T1 | T1 | | T2 | T2 | | | T1 | T1 | T1 | T1 | T1 | T1 | T1 | T1 | T1 |
| LEVEL ONE | SIZE | 24"x24" | 24"x24" | 24"x24" | 24"x24" | 24"x24" | 24"x24" | | 24"x24" | 24"x24" | 24"x24" | 24"x24" | 24"x24" | 24"x24" | 24"x24" | 24"x24" | 24"x24" | 24"x24" | 24"x24" | 24"x24" | 24"x24" | | 20"x20" | 20"x20" | 24"x24" | 24"x24" | 24"x24" | 24"x24" | 24"x24" | 24"x24" | 24"x24" | 24"x24" | 24"x24" | 24"x24" | 24"x24" |
| | REINF | 12 #8 | 12 #8 | 12 #8 | 12 #8 | 12 #8 | 8 #8 | | 12 #9 | 12 #9 | 12 #9 | 12 #9 | 12 #9 | 12 #9 | 12 #9 | 12 #9 | 12 #8 | 12 #8 | 12 #8 | 12 #8 | 12 #8 | | 8 #10 | 8 #10 | 8 #8 | 8 #8 | 12 #9 | 12 #9 | 12 #9 | 12 #9 | 12 #9 | 12 #9 | 12 #10 | 12 #10 | 12 #8 |
| | TIES | #3 @ 16" | #3 @ 16" | #3 @ 16" | #3 @ 16" | #3 @ 16" | #3 @ 16" | | #3 @ 18" | #3 @ 18" | #3 @ 18" | #3 @ 18" | #3 @ 18" | #3 @ 18" | #3 @ 18" | #3 @ 18" | #3 @ 16" | #3 @ 16" | #3 @ 16" | #3 @ 16" | #3 @ 16" | | #3 @ 18" | #3 @ 18" | #3 @ 16" | #3 @ 16" | #3 @ 18" | #3 @ 18" | #3 @ 18" | #3 @ 18" | #3 @ 18" | #3 @ 18" | #3 @ 18" | #3 @ 18" | #3 @ 16" |
| | TYPE | T3 | T3 | T3 | T3 | T3 | T2 | | T3 | T3 | T3 | T3 | T3 | T3 | T3 | T3 | T3 | T3 | T3 | T3 | T3 | | T2 | T2 | T2 | T2 | T3 | T3 | T3 | T3 | T3 | T3 | T3 | T3 | T3 |
| GARAGE LEVEL | SIZE | 24"x24" | 24"x24" | 24"x24" | 24"x24" | 24"x24" | 24"x24" | 24"x24" | 24"x24" | 24"x24" | 24"x24" | 24"x24" | 24"x24" | 24"x24" | 24"x24" | 24"x24" | 24"x24" | 24"x24" | 24"x24" | 24"x24" | 24"x24" | 24"x24" | 20"x20" | 20"x20" | 24"x24" | 24"x24" | 24"x24" | 24"x24" | 24"x24" | 24"x24" | 24"x24" | 24"x24" | 24"x24" | 24"x24" | 24"x24" |
| | REINF | 12 #8 | 12 #8 | 12 #8 | 12 #8 | 12 #8 | 8 #8 | 8 #8 | 12 #9 | 12 #9 | 12 #9 | 12 #9 | 12 #9 | 12 #9 | 12 #9 | 12 #9 | 12 #8 | 12 #8 | 12 #8 | 12 #8 | 12 #8 | 12 #8 | 8 #10 | 8 #10 | 8 #8 | 8 #8 | 12 #9 | 12 #9 | 12 #9 | 12 #9 | 12 #9 | 12 #9 | 12 #10 | 12 #10 | 12 #8 |
| | TIES | #3 @ 10" | #3 @ 10" | #3 @ 10" | #3 @ 10" | #3 @ 10" | #3 @ 10" | #3 @ 10" | #3 @ 10" | #3 @ 10" | #3 @ 10" | #3 @ 10" | #3 @ 10" | #3 @ 10" | #3 @ 10" | #3 @ 10" | #3 @ 10" | #3 @ 10" | #3 @ 10" | #3 @ 10" | #3 @ 10" | #3 @ 10" | #3 @ 8" | #3 @ 8" | #3 @ 10" | #3 @ 10" | #3 @ 10" | #3 @ 10" | #3 @ 10" | #3 @ 10" | #3 @ 10" | #3 @ 10" | #3 @ 10" | #3 @ 10" | #3 @ 10" |
| | TYPE | T3 | T3 | T3 | T3 | T3 | T2 | T2 | T3 | T3 | T3 | T3 | T3 | T3 | T3 | T3 | T3 | T3 | T3 | T3 | T3 | T3 | T2 | T2 | T2 | T2 | T3 | T3 | T3 | T3 | T3 | T3 | T3 | T3 | T3 |
| DOWELS | | 12 #8 | 12 #8 | 12 #8 | 12 #8 | 12 #8 | 8 #8 | 8 #8 | 12 #9 | 12 #9 | 12 #9 | 12 #9 | 12 #9 | 12 #9 | 12 #9 | 12 #9 | 12 #8 | 12 #8 | 12 #8 | 12 #8 | 12 #8 | 12 #8 | 8 #10 | 8 #10 | 8 #8 | 8 #8 | 12 #9 | 12 #9 | 12 #9 | 12 #9 | 12 #9 | 12 #9 | 12 #10 | 12 #10 | 12 #8 |
| REMARKS | | – | – | – | – | – | – | – | 2 – | – | – | – | – | – | – | – | – | – | – | – | – | – | – | – | – | – | – | – | – | – | – | – | – | – | – |
| FOUNDATION SERVICE LOAD (k) | | 571 | 571 | 571 | 571 | 542 | 237 | 165 | 645 | 748 | 748 | 748 | 748 | 748 | 860 | 730 | 664 | 664 | 664 | 664 | 581 | 145 | 468 | 468 | 149 | 149 | 645 | 748 | 748 | 748 | 748 | 748 | 860 | 888 | 664 |

**COLUMN SCHEDULE**

| LEVEL / PH ROOF | COLUMN MARK | P-6 | Q-6 | R-6 | S-6 | U.9-6.3 | B-7 | D-7 | E-7 | F-7 | G-7 | H-7 | J-7 | L-7 | L.7-7 | M-7 | N-7 | P-7 | Q-7 | R-7 | S-7 | W-7.2 | V.3-7.5 | U-7.8 | B-8 | D-8 | E-8 | F-8 | G-8 | H-8 | J-8 | K-8 | L-8 | M-8 | N-8 |
|---|---|---|---|---|---|---|---|---|---|---|---|---|---|---|---|---|---|---|---|---|---|---|---|---|---|---|---|---|---|---|---|---|---|---|---|
| ROOF/ PH FL | SIZE | | | | | | | | | | | | | | | | | | | | | | | | | | | | | | | | | | |
| | REINF | | | | | | | | | | | | | | | | | | | | | | | | | | | | | | | | | | |
| | TIES | | | | | | | | | | | | | | | | | | | | | | | | | | | | | | | | | | |
| | TYPE | | | | | | | | | | | | | | | | | | | | | | | | | | | | | | | | | | |
| LEVEL EIGHT | SIZE | 16"x16" | 16"x16" | 16"x16" | 16"x16" | | | 16"x16" | 16"x16" | 16"x16" | 16"x16" | 16"x16" | 16"x16" | 16"x16" | | 16"x16" | 16"x16" | 16"x16" | 16"x16" | 16"x16" | 16"x16" | | | | | | | | | | | | | | |
| | REINF | 4 #8 | 4 #8 | 4 #8 | 4 #8 | | | 4 #8 | 4 #8 | 4 #8 | 4 #8 | 4 #8 | 4 #8 | 4 #8 | | 4 #8 | 4 #8 | 4 #8 | 4 #8 | 4 #8 | 4 #8 | | | | | | | | | | | | | | |
| | TIES | #3 @ 16" | #3 @ 16" | #3 @ 16" | #3 @ 16" | | | #3 @ 16" | #3 @ 16" | #3 @ 16" | #3 @ 16" | #3 @ 16" | #3 @ 16" | #3 @ 16" | | #3 @ 16" | #3 @ 16" | #3 @ 16" | #3 @ 16" | #3 @ 16" | #3 @ 16" | | | | | | | | | | | | | | |
| | TYPE | T1 | T1 | T1 | T1 | | | T1 | T1 | T1 | T1 | T1 | T1 | T1 | | T1 | T1 | T1 | T1 | T1 | T1 | | | | | | | | | | | | | | |
| LEVEL SEVEN | SIZE | 16"x16" | 16"x16" | 16"x16" | 16"x16" | | | 16"x16" | 16"x16" | 16"x16" | 16"x16" | 16"x16" | 16"x16" | 16"x16" | | 16"x16" | 16"x16" | 16"x16" | 16"x16" | 16"x16" | 16"x16" | | | | | | | | | | | | | | |
| | REINF | 4 #8 | 4 #8 | 4 #8 | 4 #8 | | | 4 #8 | 4 #8 | 4 #8 | 4 #8 | 4 #8 | 4 #8 | 4 #8 | | 4 #8 | 4 #8 | 4 #8 | 4 #8 | 4 #8 | 4 #8 | | | | | | | | | | | | | | |
| | TIES | #3 @ 16" | #3 @ 16" | #3 @ 16" | #3 @ 16" | | | #3 @ 16" | #3 @ 16" | #3 @ 16" | #3 @ 16" | #3 @ 16" | #3 @ 16" | #3 @ 16" | | #3 @ 16" | #3 @ 16" | #3 @ 16" | #3 @ 16" | #3 @ 16" | #3 @ 16" | | | | | | | | | | | | | | |
| | TYPE | T1 | T1 | T1 | T1 | | | T1 | T1 | T1 | T1 | T1 | T1 | T1 | | T1 | T1 | T1 | T1 | T1 | T1 | | | | | | | | | | | | | | |
| LEVEL SIX | SIZE | 16"x16" | 16"x16" | 16"x16" | 16"x16" | | | 16"x16" | 16"x16" | 16"x16" | 16"x16" | 16"x16" | 16"x16" | 16"x16" | | 16"x16" | 16"x16" | 16"x16" | 16"x16" | 16"x16" | 16"x16" | | | | | | | | | | | | | | |
| | REINF | 4 #8 | 4 #8 | 4 #8 | 4 #8 | | | 4 #8 | 4 #8 | 4 #8 | 4 #8 | 4 #8 | 4 #8 | 4 #8 | | 4 #8 | 4 #8 | 4 #8 | 4 #8 | 4 #8 | 4 #8 | | | | | | | | | | | | | | |
| | TIES | #3 @ 16" | #3 @ 16" | #3 @ 16" | #3 @ 16" | | | #3 @ 16" | #3 @ 16" | #3 @ 16" | #3 @ 16" | #3 @ 16" | #3 @ 16" | #3 @ 16" | | #3 @ 16" | #3 @ 16" | #3 @ 16" | #3 @ 16" | #3 @ 16" | #3 @ 16" | | | | | | | | | | | | | | |
| | TYPE | T1 | T1 | T1 | T1 | | | T1 | T1 | T1 | T1 | T1 | T1 | T1 | | T1 | T1 | T1 | T1 | T1 | T1 | | | | | | | | | | | | | | |
| LEVEL FIVE | SIZE | 16"x16" | 16"x16" | 16"x16" | 16"x16" | | | 16"x16" | 16"x16" | 16"x16" | 16"x16" | 16"x16" | 16"x16" | 16"x16" | | 16"x16" | 16"x16" | 16"x16" | 16"x16" | 16"x16" | 16"x16" | | | | | | | | | | | | | | |
| | REINF | 4 #8 | 4 #8 | 4 #8 | 4 #8 | | | 4 #8 | 4 #8 | 4 #8 | 4 #8 | 4 #8 | 4 #8 | 4 #8 | | 4 #8 | 4 #8 | 4 #8 | 4 #8 | 4 #8 | 4 #8 | | | | | | | | | | | | | | |
| | TIES | #3 @ 16" | #3 @ 16" | #3 @ 16" | #3 @ 16" | | | #3 @ 16" | #3 @ 16" | #3 @ 16" | #3 @ 16" | #3 @ 16" | #3 @ 16" | #3 @ 16" | | #3 @ 16" | #3 @ 16" | #3 @ 16" | #3 @ 16" | #3 @ 16" | #3 @ 16" | | | | | | | | | | | | | | |
| | TYPE | T1 | T1 | T1 | T1 | | | T1 | T1 | T1 | T1 | T1 | T1 | T1 | | T1 | T1 | T1 | T1 | T1 | T1 | | | | | | | | | | | | | | |
| LEVEL FOUR | SIZE | 16"x16" | 16"x16" | 16"x16" | 16"x16" | | | 16"x16" | 16"x16" | 16"x16" | 16"x16" | 16"x16" | 16"x16" | 16"x16" | | 16"x16" | 16"x16" | 16"x16" | 16"x16" | 16"x16" | 16"x16" | | | | | | | | | | | | | | |
| | REINF | 4 #8 | 4 #8 | 4 #8 | 4 #8 | | | 4 #8 | 4 #8 | 4 #8 | 4 #8 | 4 #8 | 4 #8 | 4 #8 | | 4 #8 | 4 #8 | 4 #8 | 4 #8 | 4 #8 | 4 #8 | | | | | | | | | | | | | | |
| | TIES | #3 @ 16" | #3 @ 16" | #3 @ 16" | #3 @ 16" | | | #3 @ 16" | #3 @ 16" | #3 @ 16" | #3 @ 16" | #3 @ 16" | #3 @ 16" | #3 @ 16" | | #3 @ 16" | #3 @ 16" | #3 @ 16" | #3 @ 16" | #3 @ 16" | #3 @ 16" | | | | | | | | | | | | | | |
| | TYPE | T1 | T1 | T1 | T1 | | | T1 | T1 | T1 | T1 | T1 | T1 | T1 | | T1 | T1 | T1 | T1 | T1 | T1 | | | | | | | | | | | | | | |
| LEVEL THREE | SIZE | 16"x16" | 16"x16" | 16"x16" | 16"x16" | | | 16"x16" | 16"x16" | 16"x16" | 16"x16" | 16"x16" | 16"x16" | 16"x16" | | 16"x16" | 16"x16" | 16"x16" | 16"x16" | 16"x16" | 16"x16" | | | | | | | | | | | | | | |
| | REINF | 4 #8 | 4 #8 | 4 #8 | 4 #8 | | | 4 #8 | 4 #8 | 4 #8 | 4 #8 | 4 #8 | 4 #8 | 4 #8 | | 4 #8 | 4 #8 | 4 #8 | 4 #8 | 4 #8 | 4 #8 | | | | | | | | | | | | | | |
| | TIES | #3 @ 16" | #3 @ 16" | #3 @ 16" | #3 @ 16" | | | #3 @ 16" | #3 @ 16" | #3 @ 16" | #3 @ 16" | #3 @ 16" | #3 @ 16" | #3 @ 16" | | #3 @ 16" | #3 @ 16" | #3 @ 16" | #3 @ 16" | #3 @ 16" | #3 @ 16" | | | | | | | | | | | | | | |
| | TYPE | T1 | T1 | T1 | T1 | | | T1 | T1 | T1 | T1 | T1 | T1 | T1 | | T1 | T1 | T1 | T1 | T1 | T1 | | | | | | | | | | | | | | |
| LEVEL TWO | SIZE | 16"x16" | 16"x16" | 16"x16" | 16"x16" | | | 16"x16" | 16"x16" | 16"x16" | 16"x16" | 16"x16" | 16"x16" | 16"x16" | 16"x16" | 16"x16" | 16"x16" | 16"x16" | 16"x16" | 16"x16" | 16"x16" | | | | | | | | | 16"x16" | 16"x16" | 16"x16" | 16"x16" | 16"x16" | 16"x16" |
| | REINF | 4 #8 | 4 #8 | 4 #8 | 4 #8 | | | 4 #8 | 4 #8 | 4 #8 | 4 #8 | 4 #8 | 4 #8 | 4 #8 | 4 #8 | 4 #8 | 4 #8 | 4 #8 | 4 #8 | 4 #8 | 4 #8 | | | | | | | | | 4 #8 | 4 #8 | 4 #8 | 4 #8 | 4 #8 | 4 #8 |
| | TIES | #3 @ 16" | #3 @ 16" | #3 @ 16" | #3 @ 16" | | | #3 @ 16" | #3 @ 16" | #3 @ 16" | #3 @ 16" | #3 @ 16" | #3 @ 16" | #3 @ 16" | #3 @ 16" | #3 @ 16" | #3 @ 16" | #3 @ 16" | #3 @ 16" | #3 @ 16" | #3 @ 16" | | | | | | | | | #3 @ 16" | #3 @ 16" | #3 @ 16" | #3 @ 16" | #3 @ 16" | #3 @ 16" |
| | TYPE | T1 | T1 | T1 | T1 | | | T1 | T1 | T1 | T1 | T1 | T1 | T1 | T1 | T1 | T1 | T1 | T1 | T1 | T1 | | | | | | | | | T1 | T1 | T1 | T1 | T1 | T1 |
| LEVEL ONE | SIZE | 24"x24" | 24"x24" | 24"x24" | 24"x24" | 24"x24" | 24"x24" | 24"x24" | 24"x24" | 24"x24" | 24"x24" | 24"x24" | 24"x24" | 24"x24" | | 24"x24" | 24"x24" | 24"x24" | 24"x24" | 24"x24" | 24"x24" | | 24"x24" | 24"x24" | 24"x24" | 24"x24" | 24"x24" | 24"x24" | 24"x24" | 24"x24" | 24"x24" | 24"x24" | 24"x24" | 24"x24" | 24"x24" |
| | REINF | 12 #8 | 12 #8 | 12 #8 | 12 #8 | 8 #8 | 8 #8 | 12 #8 | 12 #8 | 12 #8 | 12 #8 | 12 #8 | 12 #8 | 12 #10 | | 12 #10 | 12 #8 | 12 #8 | 12 #8 | 12 #8 | 12 #8 | | 8 #8 | 8 #8 | 8 #8 | 8 #8 | 8 #8 | 8 #8 | 8 #8 | 8 #8 | 8 #9 | 8 #9 | 8 #9 | 8 #9 | 8 #8 |
| | TIES | #3 @ 16" | #3 @ 16" | #3 @ 16" | #3 @ 16" | #3 @ 16" | #3 @ 16" | #3 @ 16" | #3 @ 16" | #3 @ 16" | #3 @ 16" | #3 @ 16" | #3 @ 16" | #3 @ 18" | | #3 @ 18" | #3 @ 16" | #3 @ 16" | #3 @ 16" | #3 @ 16" | #3 @ 16" | | #3 @ 16" | #3 @ 16" | #3 @ 16" | #3 @ 16" | #3 @ 16" | #3 @ 16" | #3 @ 16" | #3 @ 16" | #3 @ 18" | #3 @ 18" | #3 @ 18" | #3 @ 18" | #3 @ 16" |
| | TYPE | T3 | T3 | T3 | T3 | T3 | T3 | T3 | T3 | T3 | T3 | T3 | T3 | T3 | | T3 | T3 | T3 | T3 | T3 | T3 | | T2 | T2 | T2 | T2 | T2 | T2 | T2 | T2 | T2 | T2 | T2 | T2 | T2 |
| GARAGE LEVEL | SIZE | 24"x24" | 24"x24" | 24"x24" | 24"x24" | 24"x24" | 24"x24" | 24"x24" | 24"x24" | 24"x24" | 24"x24" | 24"x24" | 24"x24" | 24"x24" | | 24"x24" | 24"x24" | 24"x24" | 24"x24" | 24"x24" | 24"x24" | 24"x24" | 24"x24" | 24"x24" | 24"x24" | 24"x24" | 24"x24" | 24"x24" | 24"x24" | 24"x24" | 24"x24" | 24"x24" | 24"x24" | 24"x24" | 24"x24" |
| | REINF | 12 #8 | 12 #8 | 12 #8 | 12 #8 | 8 #8 | 8 #8 | 12 #8 | 12 #8 | 12 #8 | 12 #8 | 12 #8 | 12 #8 | 12 #10 | | 12 #10 | 12 #8 | 12 #8 | 12 #8 | 12 #8 | 12 #8 | 8 #8 | 8 #8 | 8 #8 | 8 #8 | 8 #8 | 8 #8 | 8 #8 | 8 #8 | 8 #8 | 8 #9 | 8 #9 | 8 #9 | 8 #9 | 8 #8 |
| | TIES | #3 @ 10" | #3 @ 10" | #3 @ 10" | #3 @ 10" | #3 @ 10" | #3 @ 10" | #3 @ 10" | #3 @ 10" | #3 @ 10" | #3 @ 10" | #3 @ 10" | #3 @ 10" | #3 @ 10" | | #3 @ 10" | #3 @ 10" | #3 @ 10" | #3 @ 10" | #3 @ 10" | #3 @ 10" | #3 @ 10" | #3 @ 10" | #3 @ 10" | #3 @ 10" | #3 @ 10" | #3 @ 10" | #3 @ 10" | #3 @ 10" | #3 @ 10" | #3 @ 10" | #3 @ 10" | #3 @ 10" | #3 @ 10" | #3 @ 10" |
| | TYPE | T3 | T3 | T3 | T3 | T2 | T2 | T3 | T3 | T3 | T3 | T3 | T3 | T3 | | T3 | T3 | T3 | T3 | T3 | T3 | T2 | T2 | T2 | T2 | T2 | T2 | T2 | T2 | T2 | T2 | T2 | T2 | T2 | T2 |
| DOWELS | | 12 #8 | 12 #8 | 12 #8 | 12 #8 | 8 #8 | 8 #8 | 12 #8 | 12 #8 | 12 #8 | 12 #8 | 12 #8 | 12 #8 | 12 #10 | 4 #8 | 12 #10 | 12 #8 | 12 #8 | 12 #8 | 12 #8 | 12 #8 | 8 #8 | 8 #8 | 8 #8 | 8 #8 | 8 #8 | 8 #8 | 8 #8 | 8 #8 | 8 #8 | 8 #9 | 8 #9 | 8 #9 | 8 #9 | 8 #8 |
| REMARKS | | – | – | – | – | – | – | – | – | – | – | – | – | – | – | – | – | – | – | – | – | – | – | – | – | – | – | – | – | – | – | – | – | – | – |
| FOUNDATION SERVICE LOAD (k) | | 664 | 664 | 664 | 631 | 221 | 221 | 542 | 571 | 571 | 571 | 571 | 611 | 853 | – | 888 | 571 | 571 | 571 | 571 | 591 | 165 | 298 | 221 | 221 | 312 | 247 | 247 | 247 | 315 | 434 | 455 | 455 | 434 | 334 |

NOTES:
1. SERVICE LOADS INDICATED INCLUDE DEAD LOAD PLUS LIVE LOAD ONLY.
2. CONCRETE COMPRESSIVE STRENGTH (f'c) EQUALS 5000 PSI FOR ALL COLUMNS, UNO.
3. REFER TO S-501 FOR COLUMN DETAILS.
4. REFER TO S-501 FOR MINIMUM COMPRESSION DEVELOPMENT LENGTH TABLE FOR COLUMN DOWELS.
5. REFER TO S-501 FOR MINIMUM COMPRESSION LAP SPLICE LENGTH TABLE FOR COLUMN VERTICAL BARS.

PROPERTY OF THE UNITED STATES GOVERNMENT – FOR OFFICIAL USE ONLY. Do not remove this notice. Properly destroy documents when no longer needed.

GENERAL SERVICES ADMINISTRATION
77 FORSYTH STREET
SUITE 600
ATLANTA, GA 30303
TEL: (404)331-3200

JACOBS
PROJECT MANAGEMENT CONSULTANT TO THE GENERAL SERVICES ADMINISTRATION

YATES CONSTRUCTION

SFCS Architecture Engineering Planning Interiors

URS CORPORATION
2020 K ST, NW
SUITE 300
WASHINGTON D.C. 20006

ISSUED FOR CONSTRUCTION

CERTIFICATIONS: DISTRICT OF COLUMBIA — MARK W. ZIMPELMAN — 8572 — REGISTERED PROFESSIONAL ENGINEER — 09/08/08

KEY PLAN

REVISION NOTES

| MARK | DATE | DESCRIPTION |
|---|---|---|
| | 01/15/08 | COLUMN FOUNDATION SUBMISSION |
| | 01/15/08 | ISSUED FOR CONSTRUCTION |
| 2 | 02/27/08 | ADD COLUMN REINF AND DETAILS |
| 14 | 04/23/08 | COLUMN REINF FOR UPPER LEVELS |
| 30 | 07/21/08 | REVISED POUR STRIP LOCATION |
| 37 | 09/08/08 | RE-ISSUED FOR CONSTRUCTION |

GRAPHIC SCALE

| CONTRACTORS | |
|---|---|
| A/E CON. NO. | GS-04P-07-EX-C-0099 |
| A/E TASK NO. | |
| CONS. CONTR. | |
| CONS. WORK | |
| PRIME A/E | |
| SUB A/E | |
| CONSTR. CON. | |

| BUILDING | |
|---|---|
| NAME | ARMED FORCES RETIREMENT HOME |
| STREET | 1800 BEACH DRIVE |
| CITY/ST./ZIP | GULFPORT, MS 39507 |
| BUILDING NO. | |
| OTHER | |
| BUILDING NOs. | |
| FACILITY CODE | |

| PROJECT | |
|---|---|
| PROJECT TITLE | ARMED FORCES RETIREMENT HOME GULFPORT, MISSISSIPPI |
| PROJECT DESCRIPTION | NEW CONSTRUCTION |
| PROJECT NO. | 31942982 |
| GSA PM | STEVEN SMITH |
| SUBMISSION | ISSUED FOR CONSTRUCTION |
| SUB. DATE | 09/08/2008 |

| DRAWING | |
|---|---|
| DRAWING TITLE | COLUMN SCHEDULE |
| FILE NAME | S-602-N0095730.DWG |
| FLOOR NO. | 00 |
| DRAWN BY | JVS — DATE DRAFTED: |
| CHECKED BY | MWZ — SHEET SIZE: 34 X 44 |
| DRAWING NO. | S 6 02 (DISCIPLINE, SHEET TYPE, SEQUENCE) — SHEET 000 OF 000 |

## COLUMN SCHEDULE

| LEVEL / COLUMN MARK | | P-8 | Q-8 | R-8 | S.2-8 | W-8.2 | V.7-8.5 (2) | U.5-8.8 | B-9 | D-9 | E-9 | F-9 | G-9 | H-9 | J-9 | K-9 | L-9 | M-9 | N-9 | P-9 | Q-9 | R-9 | S.2-9 | W-9 | W.2-9.4 (2) | V-9.6 | W-9.6 | J.4-9.9 (2) | K-9.9 | L-9.9 | L.8-9.9 | B-10 | D-10 | E-10 | F-10 |
|---|---|---|---|---|---|---|---|---|---|---|---|---|---|---|---|---|---|---|---|---|---|---|---|---|---|---|---|---|---|---|---|---|---|---|---|
| PH ROOF | | | | | | | | | | | | | | | | | | | | | | | | | | | | | | | | | | | |
| ROOF/ PH FL | SIZE | | | | | | | | | | | | | | | | | | | | | | | | | | | | | | | | | | |
| | REINF | | | | | | | | | | | | | | | | | | | | | | | | | | | | | | | | | | |
| | TIES | | | | | | | | | | | | | | | | | | | | | | | | | | | | | | | | | | |
| | TYPE | | | | | | | | | | | | | | | | | | | | | | | | | | | | | | | | | | |
| LEVEL EIGHT | SIZE | | | | | | | | | | | | | | | | | | | | | | | | | | | | | | | 16"x16" | 16"x16" | 16"x16" |
| | REINF | | | | | | | | | | | | | | | | | | | | | | | | | | | | | | | 4 #8 | 4 #8 | 4 #8 |
| | TIES | | | | | | | | | | | | | | | | | | | | | | | | | | | | | | | #3 @ 16" | #3 @ 16" | #3 @ 16" |
| | TYPE | | | | | | | | | | | | | | | | | | | | | | | | | | | | | | | T1 | T1 | T1 |
| LEVEL SEVEN | SIZE | | | | | | | | | | | | | | | | | | | | | | | | | | | | | | | 16"x16" | 16"x16" | 16"x16" |
| | REINF | | | | | | | | | | | | | | | | | | | | | | | | | | | | | | | 4 #8 | 4 #8 | 4 #8 |
| | TIES | | | | | | | | | | | | | | | | | | | | | | | | | | | | | | | #3 @ 16" | #3 @ 16" | #3 @ 16" |
| | TYPE | | | | | | | | | | | | | | | | | | | | | | | | | | | | | | | T1 | T1 | T1 |
| LEVEL SIX | SIZE | | | | | | | | | | | | | | | | | | | | | | | | | | | | | | | 16"x16" | 16"x16" | 16"x16" |
| | REINF | | | | | | | | | | | | | | | | | | | | | | | | | | | | | | | 4 #8 | 4 #8 | 4 #8 |
| | TIES | | | | | | | | | | | | | | | | | | | | | | | | | | | | | | | #3 @ 16" | #3 @ 16" | #3 @ 16" |
| | TYPE | | | | | | | | | | | | | | | | | | | | | | | | | | | | | | | T1 | T1 | T1 |
| LEVEL FIVE | SIZE | | | | | | | | | | | | | | | | | | | | | | | | | | | | | | | 16"x16" | 16"x16" | 16"x16" |
| | REINF | | | | | | | | | | | | | | | | | | | | | | | | | | | | | | | 4 #8 | 4 #8 | 4 #8 |
| | TIES | | | | | | | | | | | | | | | | | | | | | | | | | | | | | | | #3 @ 16" | #3 @ 16" | #3 @ 16" |
| | TYPE | | | | | | | | | | | | | | | | | | | | | | | | | | | | | | | T1 | T1 | T1 |
| LEVEL FOUR | SIZE | | | | | | | | | | | | | | | | | | | | | | | | | | | | | | | 16"x16" | 16"x16" | 16"x16" |
| | REINF | | | | | | | | | | | | | | | | | | | | | | | | | | | | | | | 4 #8 | 4 #8 | 4 #8 |
| | TIES | | | | | | | | | | | | | | | | | | | | | | | | | | | | | | | #3 @ 16" | #3 @ 16" | #3 @ 16" |
| | TYPE | | | | | | | | | | | | | | | | | | | | | | | | | | | | | | | T1 | T1 | T1 |
| LEVEL THREE | SIZE | | | | | | | | | | | | | | | | | | | | | | | | | | | | | | | 16"x16" | 16"x16" | 16"x16" |
| | REINF | | | | | | | | | | | | | | | | | | | | | | | | | | | | | | | 4 #8 | 4 #8 | 4 #8 |
| | TIES | | | | | | | | | | | | | | | | | | (14) | | | | | | | | | (2) | | | (14) | #3 @ 16" | #3 @ 16" | #3 @ 16" |
| | TYPE | | | | | | | | | | | | | | | | | | | | | | | | | | | | | | | T1 | T1 | T1 |
| LEVEL TWO | SIZE | | | | | | | | | | | | | 16"x16" | 16"x16" | 16"x16" | 16"x16" | 16"x16" | 16"x16" | | | | | | | | | 16"x16" | 16"x16" | 16"x16" | 16"x16" | 16"x16" | 16"x16" | 16"x16" | 16"x16" |
| | REINF | | | | | | | | | | | | | 4 #8 | 4 #8 | 4 #8 | 4 #8 | 4 #8 | 4 #8 | | | | | | | | | 4 #8 | 4 #8 | 4 #8 | 4 #8 | 4 #8 | 4 #8 | 4 #8 | 4 #8 |
| | TIES | | | | | | | | | | | | | #3 @ 16" | #3 @ 16" | #3 @ 16" | #3 @ 16" | #3 @ 16" | #3 @ 16" | | | | | | | | | #3 @ 16" | #3 @ 16" | #3 @ 16" | #3 @ 16" | #3 @ 16" | #3 @ 16" | #3 @ 16" | #3 @ 16" |
| | TYPE | | | | | | | | | | | | | T1 | T1 | T1 | T1 | T1 | T1 | | | | | | | | | T1 | T1 | T1 | T1 | T1 | T1 | T1 | T1 |
| LEVEL ONE | SIZE | 24"x24" | 24"x24" | 24"x24" | 24"x24" | | 24"x24" | 24"x24" | 24"x24" | 24"x24" | 24"x24" | 24"x24" | 24"x24" | 24"x24" | 24"x24" | 24"x24" | 24"x24" | 24"x24" | 24"x24" | 24"x24" | 24"x24" | 24"x24" | 24"x24" | | 24"x24" | 24"x24" | | | | | | 24"x24" | 24"x24" | 24"x24" | 24"x24" |
| | REINF | 8 #8 | 8 #8 | 8 #8 | 8 #8 | | 8 #8 | 8 #8 | 8 #8 | 8 #8 | 8 #8 | 8 #8 | 8 #8 | 8 #8 | 8 #9 | 8 #9 | 8 #9 | 8 #9 | 8 #8 | 8 #8 | 8 #8 | 8 #8 | 8 #8 | | 8 #8 | 8 #8 | | | | | | 8 #8 | 12 #8 | 12 #8 | 12 #8 |
| | TIES | #3 @ 16" | #3 @ 16" | #3 @ 16" | #3 @ 16" | | #3 @ 16" | #3 @ 16" | #3 @ 16" | #3 @ 16" | #3 @ 16" | #3 @ 16" | #3 @ 16" | #3 @ 16" | #3 @ 18" | #3 @ 18" | #3 @ 18" | #3 @ 18" | #3 @ 16" | #3 @ 16" | #3 @ 16" | #3 @ 16" | #3 @ 16" | | #3 @ 16" | #3 @ 16" | | (2) | | | | | #3 @ 16" | #3 @ 16" | #3 @ 16" |
| | TYPE | T2 | T2 | T2 | T2 | | T2 | T2 | T2 | T2 | T2 | T2 | T2 | T2 | T2 | T2 | T2 | T2 | T2 | T2 | T2 | T2 | T2 | | T2 | T2 | | | | | | T2 | T3 | T3 | T3 |
| GARAGE LEVEL | SIZE | 24"x24" | 24"x24" | 24"x24" | 24"x24" | 24"x24" | 24"x24" | 24"x24" | 24"x24" | 24"x24" | 24"x24" | 24"x24" | 24"x24" | 24"x24" | 24"x24" | 24"x24" | 24"x24" | 24"x24" | 24"x24" | 24"x24" | 24"x24" | 24"x24" | 24"x24" | 24"x24" | 24"x24" | 24"x24" | 24"x24" | | | | | 24"x24" | 24"x24" | 24"x24" | 24"x24" |
| | REINF | 8 #8 | 8 #8 | 8 #8 | 8 #8 | 8 #8 | 8 #8 | 8 #8 | 8 #8 | 8 #8 | 8 #8 | 8 #8 | 8 #8 | 8 #8 | 8 #9 | 8 #9 | 8 #9 | 8 #9 | 8 #8 | 8 #8 | 8 #8 | 8 #8 | 8 #8 | 8 #8 | 8 #8 | 8 #8 | 8 #8 | | | | | 8 #8 | 12 #8 | 12 #8 | 12 #8 |
| | TIES | #3 @ 10" | #3 @ 10" | #3 @ 10" | #3 @ 10" | #3 @ 10" | #3 @ 10" | #3 @ 10" | #3 @ 10" | #3 @ 10" | #3 @ 10" | #3 @ 10" | #3 @ 10" | #3 @ 10" | #3 @ 10" | #3 @ 10" | #3 @ 10" | #3 @ 10" | #3 @ 10" | #3 @ 10" | #3 @ 10" | #3 @ 10" | #3 @ 10" | #3 @ 10" | #3 @ 10" | #3 @ 10" | #3 @ 10" | #3 @ 10" | | | | | #3 @ 10" | #3 @ 10" | #3 @ 10" | #3 @ 10" |
| | TYPE | T2 | T2 | T2 | T2 | T2 | T2 | T2 | T2 | T2 | T2 | T2 | T2 | T2 | T2 | T2 | T2 | T2 | T2 | T2 | T2 | T2 | T2 | T2 | T2 | T2 | T2 | | | | | T2 | T3 | T3 | T3 |
| DOWELS | | 8 #8 | 8 #8 | 8 #8 | 8 #8 | 8 #8 | 8 #8 | 8 #8 | 8 #8 | 8 #8 | 8 #8 | 8 #8 | 8 #8 | 8 #8 | 8 #9 | 8 #9 | 8 #9 | 8 #9 | 8 #8 | 8 #8 | 8 #8 | 8 #8 | 8 #8 | 8 #8 | 8 #8 | 8 #8 | 8 #8 | 4 #6 | 4 #6 | 4 #6 | 4 #6 | 8 #8 | 12 #8 | 12 #8 | 12 #8 |
| REMARKS | | – | – | – | – | – | – | – | – | – | – | – | – | – | – | – | – | – | – | – | – | – | – | – | – | – | – | – | – | – | – | – | – | – | – |
| FOUNDATION SERVICE LOAD (k) | | 247 | 247 | 247 | 367 | 145 | 221 | 221 | 221 | 312 | 247 | 247 | 247 | 315 | 434 | 455 | 455 | 434 | 334 | 247 | 247 | 247 | 267 | 81 | 367 | 323 | 96 (2) | – | – | – | – | 221 | 542 | 571 | 571 |

(14)

## COLUMN SCHEDULE

| LEVEL / COLUMN MARK | | G-10 | H-10 | J-10 | L-10 | M-10 | N-10 | P-10 | Q-10 | R-10 | S-10 | W.7-10.8 (2) | Y-10.8 | W-10.8 | D-11 | E-11 | F-11 | G-11 | H-11 | J-11 | L-11 | M-11 | N-11 | P-11 | Q-11 | R-11 | S-11 | W.7-11.7 (2) | Y-11.7 | W-11.7 (2) | A-11.8 | U-11.8 (14) | V-11.8 | B-12 (14) | D-12 |
|---|---|---|---|---|---|---|---|---|---|---|---|---|---|---|---|---|---|---|---|---|---|---|---|---|---|---|---|---|---|---|---|---|---|---|---|
| PH ROOF | | | | | | | | | | | | | | | | | | | | | | | | | | | | | | | | | | | |
| ROOF/ PH FL | SIZE | | | | | | | | | | | | | | 16"x16" | 16"x16" | 16"x16" | 16"x16" | 16"x16" | 16"x16" | 16"x16" | | | | | | | | | | 20"x20" | | 20"x20" | | 16"x16" |
| | REINF | | | | | | | | | | | | | | 4 #8 | 4 #8 | 4 #8 | 4 #8 | 4 #8 | 4 #8 | 4 #8 | | | | | | | | | | 8 #7 | | 8 #7 | | 4 #8 |
| | TIES | | | | | | | | | | (14) | | | | #3 @ 16" | #3 @ 16" | #3 @ 16" | #3 @ 16" | #3 @ 16" | #3 @ 16" | #3 @ 16" | | | | | | (14) | | | | #3 @ 14" | | #3 @ 14" | | #3 @ 16" |
| | TYPE | | | | | | | | | | | | | | T1 | T1 | T1 | T1 | T1 | T1 | T1 | | | | | | | | | | T2 | | T2 | | T1 |
| LEVEL EIGHT | SIZE | 16"x16" | 16"x16" | 16"x16" | 16"x16" | 16"x16" | 16"x16" | 16"x16" | 16"x16" | 16"x16" | 16"x16" | | | | 16"x16" | 16"x16" | 16"x16" | 16"x16" | 16"x16" | 16"x16" | 16"x16" | 16"x16" | 16"x16" | 16"x16" | 16"x16" | 16"x16" | 16"x16" | | | | 20"x20" | | 20"x20" | | 16"x16" |
| | REINF | 4 #8 | 4 #8 | 4 #8 | 4 #8 | 4 #8 | 4 #8 | 4 #8 | 4 #8 | 4 #8 | 4 #8 | | | | 4 #8 | 4 #8 | 4 #8 | 4 #8 | 4 #8 | 4 #8 | 4 #8 | 4 #8 | 4 #8 | 4 #8 | 4 #8 | 4 #8 | 4 #8 | | | | 8 #7 | | 8 #7 | | 4 #8 |
| | TIES | #3 @ 16" | #3 @ 16" | #3 @ 16" | #3 @ 16" | #3 @ 16" | #3 @ 16" | #3 @ 16" | #3 @ 16" | #3 @ 16" | #3 @ 16" | | | | #3 @ 16" | #3 @ 16" | #3 @ 16" | #3 @ 16" | #3 @ 16" | #3 @ 16" | #3 @ 16" | #3 @ 16" | #3 @ 16" | #3 @ 16" | #3 @ 16" | #3 @ 16" | #3 @ 16" | | | | #3 @ 14" | | #3 @ 14" | | #3 @ 16" |
| | TYPE | T1 | T1 | T1 | T1 | T1 | T1 | T1 | T1 | T1 | T1 | | | | T1 | T1 | T1 | T1 | T1 | T1 | T1 | T1 | T1 | T1 | T1 | T1 | T1 | | | | T2 | | T2 | | T1 |
| LEVEL SEVEN | SIZE | 16"x16" | 16"x16" | 16"x16" | 16"x16" | 16"x16" | 16"x16" | 16"x16" | 16"x16" | 16"x16" | 16"x16" | | | | 16"x16" | 16"x16" | 16"x16" | 16"x16" | 16"x16" | 16"x16" | 16"x16" | 16"x16" | 16"x16" | 16"x16" | 16"x16" | 16"x16" | 16"x16" | | | | 20"x20" | | 20"x20" | | 16"x16" |
| | REINF | 4 #8 | 4 #8 | 4 #8 | 4 #8 | 4 #8 | 4 #8 | 4 #8 | 4 #8 | 4 #8 | 4 #8 | | | | 4 #8 | 4 #8 | 4 #8 | 4 #8 | 4 #8 | 4 #8 | 4 #8 | 4 #8 | 4 #8 | 4 #8 | 4 #8 | 4 #8 | 4 #8 | | | | 8 #7 | | 8 #7 | | 4 #8 |
| | TIES | #3 @ 16" | #3 @ 16" | #3 @ 16" | #3 @ 16" | #3 @ 16" | #3 @ 16" | #3 @ 16" | #3 @ 16" | #3 @ 16" | #3 @ 16" | | | | #3 @ 16" | #3 @ 16" | #3 @ 16" | #3 @ 16" | #3 @ 16" | #3 @ 16" | #3 @ 16" | #3 @ 16" | #3 @ 16" | #3 @ 16" | #3 @ 16" | #3 @ 16" | #3 @ 16" | | | | #3 @ 14" | | #3 @ 14" | | #3 @ 16" |
| | TYPE | T1 | T1 | T1 | T1 | T1 | T1 | T1 | T1 | T1 | T1 | | | | T1 | T1 | T1 | T1 | T1 | T1 | T1 | T1 | T1 | T1 | T1 | T1 | T1 | | | | T2 | | T2 | | T1 |
| LEVEL SIX | SIZE | 16"x16" | 16"x16" | 16"x16" | 16"x16" | 16"x16" | 16"x16" | 16"x16" | 16"x16" | 16"x16" | 16"x16" | | | | 16"x16" | 16"x16" | 16"x16" | 16"x16" | 16"x16" | 16"x16" | 16"x16" | 16"x16" | 16"x16" | 16"x16" | 16"x16" | 16"x16" | 16"x16" | | | | 20"x20" | | 20"x20" | | 16"x16" |
| | REINF | 4 #8 | 4 #8 | 4 #8 | 4 #8 | 4 #8 | 4 #8 | 4 #8 | 4 #8 | 4 #8 | 4 #8 | | | | 4 #8 | 4 #8 | 4 #8 | 4 #8 | 4 #8 | 4 #8 | 4 #8 | 4 #8 | 4 #8 | 4 #8 | 4 #8 | 4 #8 | 4 #8 | | | | 8 #7 | | 8 #7 | | 4 #8 |
| | TIES | #3 @ 16" | #3 @ 16" | #3 @ 16" | #3 @ 16" | #3 @ 16" | #3 @ 16" | #3 @ 16" | #3 @ 16" | #3 @ 16" | #3 @ 16" | | | | #3 @ 16" | #3 @ 16" | #3 @ 16" | #3 @ 16" | #3 @ 16" | #3 @ 16" | #3 @ 16" | #3 @ 16" | #3 @ 16" | #3 @ 16" | #3 @ 16" | #3 @ 16" | #3 @ 16" | | | | #3 @ 14" | | #3 @ 14" | | #3 @ 16" |
| | TYPE | T1 | T1 | T1 | T1 | T1 | T1 | T1 | T1 | T1 | T1 | | | | T1 | T1 | T1 | T1 | T1 | T1 | T1 | T1 | T1 | T1 | T1 | T1 | T1 | | | | T2 | | T2 | | T1 |
| LEVEL FIVE | SIZE | 16"x16" | 16"x16" | 16"x16" | 16"x16" | 16"x16" | 16"x16" | 16"x16" | 16"x16" | 16"x16" | 16"x16" | | | | 16"x16" | 16"x16" | 16"x16" | 16"x16" | 16"x16" | 16"x16" | 16"x16" | 16"x16" | 16"x16" | 16"x16" | 16"x16" | 16"x16" | 16"x16" | | | | 20"x20" | | 20"x20" | | 16"x16" |
| | REINF | 4 #8 | 4 #8 | 4 #8 | 4 #8 | 4 #8 | 4 #8 | 4 #8 | 4 #8 | 4 #8 | 4 #8 | | | | 4 #8 | 4 #8 | 4 #8 | 4 #8 | 4 #8 | 4 #8 | 4 #8 | 4 #8 | 4 #8 | 4 #8 | 4 #8 | 4 #8 | 4 #8 | | | | 8 #7 | | 8 #7 | | 4 #8 |
| | TIES | #3 @ 16" | #3 @ 16" | #3 @ 16" | #3 @ 16" | #3 @ 16" | #3 @ 16" | #3 @ 16" | #3 @ 16" | #3 @ 16" | #3 @ 16" | | | | #3 @ 16" | #3 @ 16" | #3 @ 16" | #3 @ 16" | #3 @ 16" | #3 @ 16" | #3 @ 16" | #3 @ 16" | #3 @ 16" | #3 @ 16" | #3 @ 16" | #3 @ 16" | #3 @ 16" | | | | #3 @ 14" | | #3 @ 14" | | #3 @ 16" |
| | TYPE | T1 | T1 | T1 | T1 | T1 | T1 | T1 | T1 | T1 | T1 | | | | T1 | T1 | T1 | T1 | T1 | T1 | T1 | T1 | T1 | T1 | T1 | T1 | T1 | | | | T2 | | T2 | | T1 |
| LEVEL FOUR | SIZE | 16"x16" | 16"x16" | 16"x16" | 16"x16" | 16"x16" | 16"x16" | 16"x16" | 16"x16" | 16"x16" | 16"x16" | | | | 16"x16" | 16"x16" | 16"x16" | 16"x16" | 16"x16" | 16"x16" | 16"x16" | 16"x16" | 16"x16" | 16"x16" | 16"x16" | 16"x16" | 16"x16" | | | | 20"x20" | | 20"x20" | | 16"x16" |
| | REINF | 4 #8 | 4 #8 | 4 #8 | 4 #8 | 4 #8 | 4 #8 | 4 #8 | 4 #8 | 4 #8 | 4 #8 | | | | 4 #8 | 4 #8 | 4 #8 | 4 #8 | 4 #8 | 4 #8 | 4 #8 | 4 #8 | 4 #8 | 4 #8 | 4 #8 | 4 #8 | 4 #8 | | | | 8 #7 | | 8 #7 | | 4 #8 |
| | TIES | #3 @ 16" | #3 @ 16" | #3 @ 16" | #3 @ 16" | #3 @ 16" | #3 @ 16" | #3 @ 16" | #3 @ 16" | #3 @ 16" | #3 @ 16" | | | | #3 @ 16" | #3 @ 16" | #3 @ 16" | #3 @ 16" | #3 @ 16" | #3 @ 16" | #3 @ 16" | #3 @ 16" | #3 @ 16" | #3 @ 16" | #3 @ 16" | #3 @ 16" | #3 @ 16" | | | | #3 @ 14" | | #3 @ 14" | | #3 @ 16" |
| | TYPE | T1 | T1 | T1 | T1 | T1 | T1 | T1 | T1 | T1 | T1 | | | | T1 | T1 | T1 | T1 | T1 | T1 | T1 | T1 | T1 | T1 | T1 | T1 | T1 | | | | T2 | | T2 | | T1 |
| LEVEL THREE | SIZE | 16"x16" | 16"x16" | 16"x16" | 16"x16" | 16"x16" | 16"x16" | 16"x16" | 16"x16" | 16"x16" | 16"x16" | | | | 16"x16" | 16"x16" | 16"x16" | 16"x16" | 16"x16" | 16"x16" | 16"x16" | 16"x16" | 16"x16" | 16"x16" | 16"x16" | 16"x16" | 16"x16" | | | | 20"x20" | | 20"x20" | | 16"x16" |
| | REINF | 4 #8 | 4 #8 | 4 #8 | 4 #8 | 4 #8 | 4 #8 | 4 #8 | 4 #8 | 4 #8 | 4 #8 | | | | 4 #8 | 4 #8 | 4 #8 | 4 #8 | 4 #8 | 4 #8 | 4 #8 | 4 #8 | 4 #8 | 4 #8 | 4 #8 | 4 #8 | 4 #8 | | | | 8 #8 | | 8 #8 | | 4 #8 |
| | TIES | #3 @ 16" | #3 @ 16" | #3 @ 16" | #3 @ 16" | #3 @ 16" | #3 @ 16" | #3 @ 16" | #3 @ 16" | #3 @ 16" | #3 @ 16" | | | | #3 @ 16" | #3 @ 16" | #3 @ 16" | #3 @ 16" | #3 @ 16" | #3 @ 16" | #3 @ 16" | #3 @ 16" | #3 @ 16" | #3 @ 16" | #3 @ 16" | #3 @ 16" | #3 @ 16" | | | | #3 @ 16" | | #3 @ 16" | | #3 @ 16" |
| | TYPE | T1 | T1 | T1 | T1 | T1 | T1 | T1 | T1 | T1 | T1 | | | | T1 | T1 | T1 | T1 | T1 | T1 | T1 | T1 | T1 | T1 | T1 | T1 | T1 | | | | T2 | | T2 | | T1 |
| LEVEL TWO | SIZE | 16"x16" | 16"x16" | 16"x16" | 16"x16" | 16"x16" | 16"x16" | 16"x16" | 16"x16" | 16"x16" | 16"x16" | | | | 16"x16" | 16"x16" | 16"x16" | 16"x16" | 16"x16" | 16"x16" | 16"x16" | 16"x16" | 16"x16" | 16"x16" | 16"x16" | 16"x16" | 16"x16" | | | | 20"x20" | | 20"x20" | | 16"x16" |
| | REINF | 4 #8 | 4 #8 | 4 #8 | 4 #8 | 4 #8 | 4 #8 | 4 #8 | 4 #8 | 4 #8 | 4 #8 | | | | 4 #8 | 8 #8 | 8 #8 | 8 #8 | 8 #8 | 4 #8 | 8 #8 | 8 #8 | 8 #8 | 4 #8 | 4 #8 | 4 #8 | 4 #8 | | | | 8 #8 | | 8 #8 | | 4 #8 |
| | TIES | #3 @ 16" | #3 @ 16" | #3 @ 16" | #3 @ 16" | #3 @ 16" | #3 @ 16" | #3 @ 16" | #3 @ 16" | #3 @ 16" | #3 @ 16" | (2) | | | #3 @ 16" | #3 @ 16" | #3 @ 16" | #3 @ 16" | #3 @ 16" | #3 @ 16" | #3 @ 16" | #3 @ 16" | #3 @ 16" | #3 @ 16" | #3 @ 16" | #3 @ 16" | #3 @ 16" | | | | #3 @ 16" | | #3 @ 16" | | #3 @ 16" |
| | TYPE | T1 | T1 | T1 | T1 | T1 | T1 | T1 | T1 | T1 | T1 | | | | T1 | T1 | T1 | T1 | T1 | T1 | T1 | T1 | T1 | T1 | T1 | T1 | T1 | | | | T2 | | T2 | | T1 |
| LEVEL ONE | SIZE | 24"x24" | 24"x24" | 24"x24" | 24"x24" | 24"x24" | 24"x24" | 24"x24" | 24"x24" | 24"x24" | 24"x24" | | | | 24"x24" | 24"x24" | 24"x24" | 24"x24" | 24"x24" | 24"x24" | 24"x24" | 24"x24" | 24"x24" | 24"x24" | 24"x24" | 24"x24" | 24"x24" | | | | 20"x20" | 24"x24" | 20"x20" | 24"x24" | 24"x24" |
| | REINF | 12 #8 | 12 #8 | 12 #9 | 12 #9 | 12 #8 | 12 #8 | 12 #8 | 12 #8 | 12 #8 | 12 #8 | | | | 12 #9 | 12 #9 | 12 #9 | 12 #9 | 12 #9 | 12 #9 | 12 #9 | 12 #9 | 12 #9 | 12 #8 | 12 #8 | 12 #8 | 12 #8 | | | | 8 #10 | 8 #8 | 8 #10 | 8 #8 | 12 #9 |
| | TIES | #3 @ 16" | #3 @ 16" | #3 @ 18" | #3 @ 18" | #3 @ 16" | #3 @ 16" | #3 @ 16" | #3 @ 16" | #3 @ 16" | #3 @ 16" | | | | #3 @ 18" | #3 @ 18" | #3 @ 18" | #3 @ 18" | #3 @ 18" | #3 @ 18" | #3 @ 18" | #3 @ 18" | #3 @ 18" | #3 @ 16" | #3 @ 16" | #3 @ 16" | #3 @ 16" | | | | #3 @ 18" | #3 @ 16" | #3 @ 18" | #3 @ 16" | #3 @ 18" |
| | TYPE | T3 | T3 | T3 | T3 | T3 | T3 | T3 | T3 | T3 | T3 | | | | T3 | T3 | T3 | T3 | T3 | T3 | T3 | T3 | T3 | T3 | T3 | T3 | T3 | | | | T2 | T2 | T2 | T2 | T3 |
| GARAGE LEVEL | SIZE | 24"x24" | 24"x24" | 24"x24" | 24"x24" | 24"x24" | 24"x24" | 24"x24" | 24"x24" | 24"x24" | 24"x24" | 24"x24" | 24"x24" | 24"x24" | 24"x24" | 24"x24" | 24"x24" | 24"x24" | 24"x24" | 24"x24" | 24"x24" | 24"x24" | 24"x24" | 24"x24" | 24"x24" | 24"x24" | 24"x24" | 24"x24" | 24"x24" | 24"x24" | 20"x20" | 24"x24" | 20"x20" | 24"x24" | 24"x24" |
| | REINF | 12 #8 | 12 #8 | 12 #9 | 12 #9 | 12 #8 | 12 #8 | 12 #8 | 12 #8 | 12 #8 | 12 #8 | 8 #8 | 8 #8 | 8 #8 | 12 #9 | 12 #9 | 12 #9 | 12 #9 | 12 #9 | 12 #9 | 12 #9 | 12 #9 | 12 #9 | 12 #8 | 12 #8 | 12 #8 | 12 #8 | 8 #8 | 8 #8 | 8 #8 | 8 #10 | 8 #8 | 8 #10 | 8 #8 | 12 #9 |
| | TIES | #3 @ 10" | #3 @ 10" | #3 @ 10" | #3 @ 10" | #3 @ 10" | #3 @ 10" | #3 @ 10" | #3 @ 10" | #3 @ 10" | #3 @ 10" | #3 @ 10" | #3 @ 10" | #3 @ 10" | #3 @ 10" | #3 @ 10" | #3 @ 10" | #3 @ 10" | #3 @ 10" | #3 @ 10" | #3 @ 10" | #3 @ 10" | #3 @ 10" | #3 @ 10" | #3 @ 10" | #3 @ 10" | #3 @ 10" | #3 @ 10" | #3 @ 10" | #3 @ 10" | #3 @ 10" | #3 @ 8" | #3 @ 10" | #3 @ 8" | #3 @ 10" | #3 @ 10" |
| | TYPE | T3 | T3 | T3 | T3 | T3 | T3 | T3 | T3 | T3 | T3 | T2 | T2 | T2 | T3 | T3 | T3 | T3 | T3 | T3 | T3 | T3 | T3 | T3 | T3 | T3 | T3 | T2 | T2 | T2 | T2 | T2 | T2 | T2 | T3 |
| DOWELS | | 12 #8 | 12 #8 | 12 #9 | 12 #9 | 12 #8 | 12 #8 | 12 #8 | 12 #8 | 12 #8 | 12 #8 | 8 #8 | 8 #8 | 8 #8 | 12 #9 | 12 #9 | 12 #9 | 12 #9 | 12 #9 | 12 #9 | 12 #9 | 12 #9 | 12 #9 | 12 #8 | 12 #8 | 12 #8 | 12 #8 | 8 #8 | 8 #8 | 8 #8 | 8 #10 | 8 #8 | 8 #10 | 8 #8 | 12 #9 |
| REMARKS | | – | – | – | – | – | – | – | – | – | – | – | – | – | – | – | – | – | – | – | – | – | – | – | – | – | – | – | – | – | – | – | – | – | – |
| FOUNDATION SERVICE LOAD (k) | | 571 | 571 | 611 | 736 | 682 | 571 | 571 | 571 | 571 | 542 | 182 | 153 | 96 (2) | 645 | 748 | 748 | 748 | 748 | 748 | 860 | 730 | 664 | 664 | 664 | 664 | 581 | 182 (2) | 182 | 81 | 468 | 182 | 468 | 149 | 605 (2) |

NOTES:
1. SERVICE LOADS INDICATED INCLUDE DEAD LOAD PLUS LIVE LOAD ONLY.
2. CONCRETE COMPRESSIVE STRENGTH ($f'c$) EQUALS 5000 PSI FOR ALL COLUMNS, UNO.
3. REFER TO S-501 FOR COLUMN DETAILS.
4. REFER TO S-501 FOR MINIMUM COMPRESSION DEVELOPMENT LENGTH TABLE FOR COLUMN DOWELS.
5. REFER TO S-501 FOR MINIMUM COMPRESSION LAP SPLICE LENGTH TABLE FOR COLUMN VERTICAL BARS.

(2)

PROPERTY OF THE UNITED STATES GOVERNMENT – FOR OFFICIAL USE ONLY. Do not remove this notice. Properly destroy documents when no longer needed.

GSA
GENERAL SERVICES ADMINISTRATION
77 FORSYTH STREET
SUITE 600
ATLANTA, GA 30303
TEL: (404)331-3200

AFRH The Premier Retirement Community for America's Veterans
JACOBS PROJECT MANAGEMENT CONSULTANT TO THE GENERAL SERVICES ADMINISTRATION
YATES CONSTRUCTION
SFCS Architecture Engineering Planning Interiors
URS CORPORATION
2020 K ST, NW
SUITE 300
WASHINGTON D.C. 20006

ISSUED FOR CONSTRUCTION

CERTIFICATIONS

DISTRICT OF COLUMBIA MARK W. ZIMPELMAN 8572 REGISTERED PROFESSIONAL ENGINEER 09/08/08

KEY PLAN

REVISION NOTES

| MARK | DATE | DESCRIPTION |
|---|---|---|
| | 01/15/08 | COLUMN FOUNDATION SUBMISSION |
| | 01/15/08 | ISSUED FOR CONSTRUCTION |
| (2) | 02/27/08 | ADD COLUMN REINF AND DETAILS |
| (14) | 04/23/08 | COLUMN REINF FOR UPPER LEVELS |
| (2) | 06/10/08 | REVISE OPENINGS & COLUMN SIZE |
| (3) | 09/08/08 | RE-ISSUED FOR CONSTRUCTION |

DRAWING SCALE

CONTRACTORS

| | |
|---|---|
| A/E CON. NO. | GS-04P-07-EX-C-0099 |
| A/E TASK NO. | |
| CONS. CONTR. | |
| CONS. WORK | |
| PRIME A/E | |
| SUB A/E | |
| CONSTR. CON. | |

BUILDING

| | |
|---|---|
| NAME | ARMED FORCES RETIREMENT HOME |
| STREET | 1800 BEACH DRIVE |
| CITY/ST./ZIP | GULFPORT, MS 39507 |
| BUILDING NO. | |
| OTHER BUILDING NOs. | |
| FACILITY CODE | |

PROJECT

| | |
|---|---|
| PROJECT TITLE | ARMED FORCES RETIREMENT HOME GULFPORT, MISSISSIPPI |
| PROJECT DESCRIPTION | NEW CONSTRUCTION |
| PROJECT NO. | 31942982 |
| GSA PM | STEVEN SMITH |
| SUBMISSION | ISSUED FOR CONSTRUCTION |
| SUB. DATE | 09/08/2008 |

DRAWING

| | |
|---|---|
| DRAWING TITLE | COLUMN SCHEDULE |
| FILE NAME | S-603-N0095730.DWG |
| FLOOR NO. | 00 |
| DRAWN BY | JVS DATE DRAFTED: |
| CHECKED BY | MWZ SHEET SIZE: 34 X 44 |
| DRAWING NO. | S 6 03 (DISCIPLINE SHEET TYPE SEQUENCE) |
| | SHEET 000 OF 000 |

## COLUMN SCHEDULE

| LEVEL / COLUMN MARK | | E-12 | F-12 | G-12 | H-12 | J-12 | L-12 | M-12 | N-12 | P-12 | Q-12 | R-12 | S-12 | B-13 | D-13 | E-13 | F-13 | G-13 | H-13 | J-13 | L-13 | L.7-13 | M-13 | N-13 | P-13 | Q-13 | R-13 | S-13 | V.5-13 | X-13 | Y-13 | Z-13 | W-13 | U-13.2 | B-14 |
|---|---|---|---|---|---|---|---|---|---|---|---|---|---|---|---|---|---|---|---|---|---|---|---|---|---|---|---|---|---|---|---|---|---|---|---|
| PH ROOF | | | | | | | | | | | | | | | | | | | | | | | 10 | | | | | | 14 2 | | | | | | |
| ROOF/ PH FL | SIZE | 16"x16" | 16"x16" | 16"x16" | 16"x16" | 16"x16" | 16"x16" | | | | | | 14 | | 16"x16" | 16"x16" | 16"x16" | 16"x16" | 16"x16" | 16"x16" | 16"x16" | | 16"x16" | 16"x16" | 16"x16" | 16"x16" | 16"x16" | 16"x16" | | | | | | | |
| | REINF | 4 #8 | 4 #8 | 4 #8 | 4 #8 | 4 #8 | 4 #8 | | | | | | | | 4 #8 | 4 #8 | 4 #8 | 4 #8 | 4 #8 | 4 #8 | 4 #8 | | 4 #8 | 4 #8 | 4 #8 | 4 #8 | 4 #8 | 4 #8 | | | | | | | |
| | TIES | #3 @ 16" | #3 @ 16" | #3 @ 16" | #3 @ 16" | #3 @ 16" | #3 @ 16" | | | | | | | | #3 @ 16" | #3 @ 16" | #3 @ 16" | #3 @ 16" | #3 @ 16" | #3 @ 16" | #3 @ 16" | | #3 @ 16" | #3 @ 16" | #3 @ 16" | #3 @ 16" | #3 @ 16" | #3 @ 16" | | | | | | | |
| | TYPE | T1 | T1 | T1 | T1 | T1 | T1 | | | | | | | | T1 | T1 | T1 | T1 | T1 | T1 | T1 | | T1 | T1 | T1 | T1 | T1 | T1 | | | | | | | |
| LEVEL EIGHT | SIZE | 16"x16" | 16"x16" | 16"x16" | 16"x16" | 16"x16" | 16"x16" | 16"x16" | 16"x16" | 16"x16" | 16"x16" | 16"x16" | 16"x16" | | 16"x16" | 16"x16" | 16"x16" | 16"x16" | 16"x16" | 16"x16" | 16"x16" | | 16"x16" | 16"x16" | 16"x16" | 16"x16" | 16"x16" | 16"x16" | | | | | | | |
| | REINF | 4 #8 | 4 #8 | 4 #8 | 4 #8 | 4 #8 | 4 #8 | 4 #8 | 4 #8 | 4 #8 | 4 #8 | 4 #8 | 4 #8 | | 4 #8 | 4 #8 | 4 #8 | 4 #8 | 4 #8 | 4 #8 | 4 #8 | | 4 #8 | 4 #8 | 4 #8 | 4 #8 | 4 #8 | 4 #8 | | | | | | | |
| | TIES | #3 @ 16" | #3 @ 16" | #3 @ 16" | #3 @ 16" | #3 @ 16" | #3 @ 16" | #3 @ 16" | #3 @ 16" | #3 @ 16" | #3 @ 16" | #3 @ 16" | #3 @ 16" | | #3 @ 16" | #3 @ 16" | #3 @ 16" | #3 @ 16" | #3 @ 16" | #3 @ 16" | #3 @ 16" | | #3 @ 16" | #3 @ 16" | #3 @ 16" | #3 @ 16" | #3 @ 16" | #3 @ 16" | | | | | | | |
| | TYPE | T1 | T1 | T1 | T1 | T1 | T1 | T1 | T1 | T1 | T1 | T1 | T1 | | T1 | T1 | T1 | T1 | T1 | T1 | T1 | | T1 | T1 | T1 | T1 | T1 | T1 | | | | | | | |
| LEVEL SEVEN | SIZE | 16"x16" | 16"x16" | 16"x16" | 16"x16" | 16"x16" | 16"x16" | 16"x16" | 16"x16" | 16"x16" | 16"x16" | 16"x16" | 16"x16" | | 16"x16" | 16"x16" | 16"x16" | 16"x16" | 16"x16" | 16"x16" | 16"x16" | | 16"x16" | 16"x16" | 16"x16" | 16"x16" | 16"x16" | 16"x16" | | | | | | | |
| | REINF | 4 #8 | 4 #8 | 4 #8 | 4 #8 | 4 #8 | 4 #8 | 4 #8 | 4 #8 | 4 #8 | 4 #8 | 4 #8 | 4 #8 | | 4 #8 | 4 #8 | 4 #8 | 4 #8 | 4 #8 | 4 #8 | 4 #8 | | 4 #8 | 4 #8 | 4 #8 | 4 #8 | 4 #8 | 4 #8 | | | | | | | |
| | TIES | #3 @ 16" | #3 @ 16" | #3 @ 16" | #3 @ 16" | #3 @ 16" | #3 @ 16" | #3 @ 16" | #3 @ 16" | #3 @ 16" | #3 @ 16" | #3 @ 16" | #3 @ 16" | | #3 @ 16" | #3 @ 16" | #3 @ 16" | #3 @ 16" | #3 @ 16" | #3 @ 16" | #3 @ 16" | | #3 @ 16" | #3 @ 16" | #3 @ 16" | #3 @ 16" | #3 @ 16" | #3 @ 16" | | | | | | | |
| | TYPE | T1 | T1 | T1 | T1 | T1 | T1 | T1 | T1 | T1 | T1 | T1 | T1 | | T1 | T1 | T1 | T1 | T1 | T1 | T1 | | T1 | T1 | T1 | T1 | T1 | T1 | | | | | | | |
| LEVEL SIX | SIZE | 16"x16" | 16"x16" | 16"x16" | 16"x16" | 16"x16" | 16"x16" | 16"x16" | 16"x16" | 16"x16" | 16"x16" | 16"x16" | 16"x16" | | 16"x16" | 16"x16" | 16"x16" | 16"x16" | 16"x16" | 16"x16" | 16"x16" | | 16"x16" | 16"x16" | 16"x16" | 16"x16" | 16"x16" | 16"x16" | | | | | | | |
| | REINF | 4 #8 | 4 #8 | 4 #8 | 4 #8 | 4 #8 | 4 #8 | 4 #8 | 4 #8 | 4 #8 | 4 #8 | 4 #8 | 4 #8 | | 4 #8 | 4 #8 | 4 #8 | 4 #8 | 4 #8 | 4 #8 | 4 #8 | | 4 #8 | 4 #8 | 4 #8 | 4 #8 | 4 #8 | 4 #8 | | | | | | | |
| | TIES | #3 @ 16" | #3 @ 16" | #3 @ 16" | #3 @ 16" | #3 @ 16" | #3 @ 16" | #3 @ 16" | #3 @ 16" | #3 @ 16" | #3 @ 16" | #3 @ 16" | #3 @ 16" | | #3 @ 16" | #3 @ 16" | #3 @ 16" | #3 @ 16" | #3 @ 16" | #3 @ 16" | #3 @ 16" | | #3 @ 16" | #3 @ 16" | #3 @ 16" | #3 @ 16" | #3 @ 16" | #3 @ 16" | | | | | | | |
| | TYPE | T1 | T1 | T1 | T1 | T1 | T1 | T1 | T1 | T1 | T1 | T1 | T1 | | T1 | T1 | T1 | T1 | T1 | T1 | T1 | | T1 | T1 | T1 | T1 | T1 | T1 | | | | | | | |
| LEVEL FIVE | SIZE | 16"x16" | 16"x16" | 16"x16" | 16"x16" | 16"x16" | 16"x16" | 16"x16" | 16"x16" | 16"x16" | 16"x16" | 16"x16" | 16"x16" | | 16"x16" | 16"x16" | 16"x16" | 16"x16" | 16"x16" | 16"x16" | 16"x16" | | 16"x16" | 16"x16" | 16"x16" | 16"x16" | 16"x16" | 16"x16" | | | | | | | |
| | REINF | 4 #8 | 4 #8 | 4 #8 | 4 #8 | 4 #8 | 4 #8 | 4 #8 | 4 #8 | 4 #8 | 4 #8 | 4 #8 | 4 #8 | | 4 #8 | 4 #8 | 4 #8 | 4 #8 | 4 #8 | 4 #8 | 4 #8 | | 4 #8 | 4 #8 | 4 #8 | 4 #8 | 4 #8 | 4 #8 | | | | | | | |
| | TIES | #3 @ 16" | #3 @ 16" | #3 @ 16" | #3 @ 16" | #3 @ 16" | #3 @ 16" | #3 @ 16" | #3 @ 16" | #3 @ 16" | #3 @ 16" | #3 @ 16" | #3 @ 16" | | #3 @ 16" | #3 @ 16" | #3 @ 16" | #3 @ 16" | #3 @ 16" | #3 @ 16" | #3 @ 16" | | #3 @ 16" | #3 @ 16" | #3 @ 16" | #3 @ 16" | #3 @ 16" | #3 @ 16" | | | | | | | |
| | TYPE | T1 | T1 | T1 | T1 | T1 | T1 | T1 | T1 | T1 | T1 | T1 | T1 | | T1 | T1 | T1 | T1 | T1 | T1 | T1 | | T1 | T1 | T1 | T1 | T1 | T1 | | | | | | | |
| LEVEL FOUR | SIZE | 16"x16" | 16"x16" | 16"x16" | 16"x16" | 16"x16" | 16"x16" | 16"x16" | 16"x16" | 16"x16" | 16"x16" | 16"x16" | 16"x16" | | 16"x16" | 16"x16" | 16"x16" | 16"x16" | 16"x16" | 16"x16" | 16"x16" | | 16"x16" | 16"x16" | 16"x16" | 16"x16" | 16"x16" | 16"x16" | | | | | | | |
| | REINF | 4 #8 | 4 #8 | 4 #8 | 4 #8 | 4 #8 | 4 #8 | 4 #8 | 4 #8 | 4 #8 | 4 #8 | 4 #8 | 4 #8 | | 4 #8 | 4 #8 | 4 #8 | 4 #8 | 4 #8 | 4 #8 | 4 #8 | | 4 #8 | 4 #8 | 4 #8 | 4 #8 | 4 #8 | 4 #8 | | | | | | | |
| | TIES | #3 @ 16" | #3 @ 16" | #3 @ 16" | #3 @ 16" | #3 @ 16" | #3 @ 16" | #3 @ 16" | #3 @ 16" | #3 @ 16" | #3 @ 16" | #3 @ 16" | #3 @ 16" | | #3 @ 16" | #3 @ 16" | #3 @ 16" | #3 @ 16" | #3 @ 16" | #3 @ 16" | #3 @ 16" | | #3 @ 16" | #3 @ 16" | #3 @ 16" | #3 @ 16" | #3 @ 16" | #3 @ 16" | | | | | | | |
| | TYPE | T1 | T1 | T1 | T1 | T1 | T1 | T1 | T1 | T1 | T1 | T1 | T1 | | T1 | T1 | T1 | T1 | T1 | T1 | T1 | | T1 | T1 | T1 | T1 | T1 | T1 | | | | | | | |
| LEVEL THREE | SIZE | 16"x16" | 16"x16" | 16"x16" | 16"x16" | 16"x16" | 16"x16" | 16"x16" | 16"x16" | 16"x16" | 16"x16" | 16"x16" | 16"x16" | | 16"x16" | 16"x16" | 16"x16" | 16"x16" | 16"x16" | 16"x16" | 16"x16" | | 16"x16" | 16"x16" | 16"x16" | 16"x16" | 16"x16" | 16"x16" | | | | | | | |
| | REINF | 4 #8 | 4 #8 | 4 #8 | 4 #8 | 4 #8 | 4 #8 | 4 #8 | 4 #8 | 4 #8 | 4 #8 | 4 #8 | 4 #8 | | 4 #8 | 4 #8 | 4 #8 | 4 #8 | 4 #8 | 4 #8 | 4 #8 | | 4 #8 | 4 #8 | 4 #8 | 4 #8 | 4 #8 | 4 #8 | | | | | | | |
| | TIES | #3 @ 16" | #3 @ 16" | #3 @ 16" | #3 @ 16" | #3 @ 16" | #3 @ 16" | #3 @ 16" | #3 @ 16" | #3 @ 16" | #3 @ 16" | #3 @ 16" | #3 @ 16" | | #3 @ 16" | #3 @ 16" | #3 @ 16" | #3 @ 16" | #3 @ 16" | #3 @ 16" | #3 @ 16" | | #3 @ 16" | #3 @ 16" | #3 @ 16" | #3 @ 16" | #3 @ 16" | #3 @ 16" | | | | | | | |
| | TYPE | T1 | T1 | T1 | T1 | T1 | T1 | T1 | T1 | T1 | T1 | T1 | T1 | | T1 | T1 | T1 | T1 | T1 | T1 | T1 | | T1 | T1 | T1 | T1 | T1 | T1 | | | | | | | |
| LEVEL TWO | SIZE | 16"x16" | 16"x16" | 16"x16" | 16"x16" | 16"x16" | 16"x16" | 16"x16" | 16"x16" | 16"x16" | 16"x16" | 16"x16" | 16"x16" | | 16"x16" | 16"x16" | 16"x16" | 16"x16" | 16"x16" | 16"x16" | 16"x16" | 16"x16" | 16"x16" | 16"x16" | 16"x16" | 16"x16" | 16"x16" | 16"x16" | | | | | | | |
| | REINF | 8 #8 | 8 #8 | 8 #8 | 8 #8 | 4 #8 | 8 #8 | 4 #8 | 4 #8 | 4 #8 | 4 #8 | 4 #8 | 4 #8 | | 4 #8 | 4 #8 | 4 #8 | 4 #8 | 4 #8 | 4 #8 | 4 #8 | 4 #8 | 4 #8 | 4 #8 | 4 #8 | 4 #8 | 4 #8 | 4 #8 | | | | | | | |
| | TIES | #3 @ 16" | #3 @ 16" | #3 @ 16" | #3 @ 16" | #3 @ 16" | #3 @ 16" | #3 @ 16" | #3 @ 16" | #3 @ 16" | #3 @ 16" | #3 @ 16" | #3 @ 16" | | #3 @ 16" | #3 @ 16" | #3 @ 16" | #3 @ 16" | #3 @ 16" | #3 @ 16" | #3 @ 16" | #3 @ 16" | #3 @ 16" | #3 @ 16" | #3 @ 16" | #3 @ 16" | #3 @ 16" | #3 @ 16" | #3 @ 16" | | | | | | | |
| | TYPE | T1 | T1 | T1 | T1 | T1 | T1 | T1 | T1 | T1 | T1 | T1 | T1 | 2 | T1 | T1 | T1 | T1 | T1 | T1 | T1 | T1 | T1 | T1 | T1 | T1 | T1 | T1 | | | | | | | |
| LEVEL ONE | SIZE | 24"x24" | 24"x24" | 24"x24" | 24"x24" | 24"x24" | 24"x24" | 24"x24" | 24"x24" | 24"x24" | 24"x24" | 24"x24" | 24"x24" | 24"x24" | 24"x24" | 24"x24" | 24"x24" | 24"x24" | 24"x24" | 24"x24" | 24"x24" | | 24"x24" | 24"x24" | 24"x24" | 24"x24" | 24"x24" | 24"x24" | | | | | 24"x24" | 24"x24" |
| | REINF | 12 #9 | 12 #9 | 12 #9 | 12 #9 | 12 #9 | 12 #10 | 12 #10 | 12 #8 | 12 #8 | 12 #8 | 12 #8 | 12 #8 | 8 #8 | 12 #8 | 12 #8 | 12 #8 | 12 #8 | 12 #8 | 12 #8 | 12 #10 | | 12 #10 | 12 #8 | 12 #8 | 12 #8 | 12 #8 | 12 #8 | | | | | 8 #8 | 8 #8 |
| | TIES | #3 @ 18" | #3 @ 18" | #3 @ 18" | #3 @ 18" | #3 @ 18" | #3 @ 18" | #3 @ 18" | #3 @ 16" | #3 @ 16" | #3 @ 16" | #3 @ 16" | #3 @ 16" | #3 @ 16" | #3 @ 16" | #3 @ 16" | #3 @ 16" | #3 @ 16" | #3 @ 16" | #3 @ 16" | #3 @ 18" | 2 | #3 @ 18" | #3 @ 16" | #3 @ 16" | #3 @ 16" | #3 @ 16" | #3 @ 16" | | | | | #3 @ 16" | #3 @ 16" |
| | TYPE | T3 | T3 | T3 | T3 | T3 | T3 | T3 | T3 | T3 | T3 | T3 | T3 | T3 | T3 | T3 | T3 | T3 | T3 | T3 | T3 | | T3 | T3 | T3 | T3 | T3 | T3 | | | | | T2 | T2 |
| GARAGE LEVEL | SIZE | 24"x24" | 24"x24" | 24"x24" | 24"x24" | 24"x24" | 24"x24" | 24"x24" | 24"x24" | 24"x24" | 24"x24" | 24"x24" | 24"x24" | 24"x24" | 24"x24" | 24"x24" | 24"x24" | 24"x24" | 24"x24" | 24"x24" | 24"x24" | | 24"x24" | 24"x24" | 24"x24" | 24"x24" | 24"x24" | 24"x24" | 24"x24" | 24"x24" | 24"x24" | 24"x24" | | | |
| | REINF | 12 #9 | 12 #9 | 12 #9 | 12 #9 | 12 #9 | 12 #10 | 12 #10 | 12 #8 | 12 #8 | 12 #8 | 12 #8 | 12 #8 | 8 #8 | 12 #8 | 12 #8 | 12 #8 | 12 #8 | 12 #8 | 12 #8 | 12 #10 | | 12 #10 | 12 #8 | 12 #8 | 12 #8 | 12 #8 | 12 #8 | 8 #8 | 8 #8 | 8 #8 | 8 #8 | | | |
| | TIES | #3 @ 10" | #3 @ 10" | #3 @ 10" | #3 @ 10" | #3 @ 10" | #3 @ 10" | #3 @ 10" | #3 @ 10" | #3 @ 10" | #3 @ 10" | #3 @ 10" | #3 @ 10" | #3 @ 10" | #3 @ 10" | #3 @ 10" | #3 @ 10" | #3 @ 10" | #3 @ 10" | #3 @ 10" | #3 @ 10" | | #3 @ 10" | #3 @ 10" | #3 @ 10" | #3 @ 10" | #3 @ 10" | #3 @ 10" | #3 @ 10" | #3 @ 10" | #3 @ 10" | #3 @ 10" | | | |
| | TYPE | T3 | T3 | T3 | T3 | T3 | T3 | T3 | T3 | T3 | T3 | T3 | T3 | T3 | T3 | T3 | T3 | T3 | T3 | T3 | T3 | | T3 | T3 | T3 | T3 | T3 | T3 | T2 | T2 | T2 | T2 | | | |
| DOWELS | | 12 #9 | 12 #9 | 12 #9 | 12 #9 | 12 #9 | 12 #10 | 12 #10 | 12 #8 | 12 #8 | 12 #8 | 12 #8 | 12 #8 | 8 #8 | 12 #8 | 12 #8 | 12 #8 | 12 #8 | 12 #8 | 12 #8 | 12 #10 | 4 #8 | 12 #10 | 12 #8 | 12 #8 | 12 #8 | 12 #8 | 12 #8 | 8 #8 | 8 #8 | 8 #8 | 8 #8 | 8 #8 | 8 #8 | 8 #8 |
| REMARKS | | – | – | – | – | – | – | – | – | – | – | – | – | – | – | – | – | – | – | – | – | – | – | – | – | – | – | – | – | – | – | – | – | – | – |
| FOUNDATION SERVICE LOAD (k) | | 750 | 750 | 750 | 748 | 748 | 860 | 730 | 664 | 664 | 664 | 664 | 581 | 221 | 605 | 605 | 605 | 605 | 571 | 611 | 853 | – | 888 | 571 | 571 | 571 | 571 | 542 | 153 | 153 | 153 | 153 | 96 | 221 | 221 |
| | | | 2 | | | | | | | | | | | | | | | 2 | | | | | | | | | | 2 | | | | | | | |

## COLUMN SCHEDULE

| LEVEL / COLUMN MARK | | D-14 | E-14 | F-14 | G-14 | H-14 | J-14 | K-14 | L-14 | L.8-14 | M-14 | N-14 | P-14 | Q-14 | R-14 | S-14 | U-14 | V.5-14 | X-14 | Y-14 | Z-14 | ZZ-14 | W-14.2 | ZZ-14.6 | B-15 | D-15 | E-15 | F-15 | G-15 | H-15 | J-15 | K-15 | L-15 | L.8-15 | M-15 |
|---|---|---|---|---|---|---|---|---|---|---|---|---|---|---|---|---|---|---|---|---|---|---|---|---|---|---|---|---|---|---|---|---|---|---|---|
| PH ROOF | | | | | | | | | | | | | | | | | | 2 | | | | | 2 | | | | | | | | | | | | |
| ROOF/ PH FL | SIZE | | | | | | | | | | | | | | | | | | | | | | | | | | | | | | | | | | |
| | REINF | | | | | | | | | | | | | | | | | | | | | | | | | | | | | | | | | | |
| | TIES | | | | | | | | | | | | | | | | | | | | | | | | | | | | | | | | | | |
| | TYPE | | | | | | | | | | | | | | | | | | | | | | | | | | | | | | | | | | |
| LEVEL EIGHT | SIZE | | | | | | | | | | | | | | | | | | | | | | | | | | | | | | | | | | |
| | REINF | | | | | | | | | | | | | | | | | | | | | | | | | | | | | | | | | | |
| | TIES | | | | | | | | | | | | | | | | | | | | | | | | | | | | | | | | | | |
| | TYPE | | | | | | | | | | | | | | | | | | | | | | | | | | | | | | | | | | |
| LEVEL SEVEN | SIZE | | | | | | | | | | | | | | | | | | | | | | | | | | | | | | | | | | |
| | REINF | | | | | | | | | | | | | | | | | | | | | | | | | | | | | | | | | | |
| | TIES | | | | | | | | | | | | | | | | | | | | | | | | | | | | | | | | | | |
| | TYPE | | | | | | | | | | | | | | | | | | | | | | | | | | | | | | | | | | |
| LEVEL SIX | SIZE | | | | | | | | | | | | | | | | | | | | | | | | | | | | | | | | | | |
| | REINF | | | | | | | | | | | | | | | | | | | | | | | | | | | | | | | | | | |
| | TIES | | | | | | | | | | | | | | | | | | | | | | | | | | | | | | | | | | |
| | TYPE | | | | | | | | | | | | | | | | | | | | | | | | | | | | | | | | | | |
| LEVEL FIVE | SIZE | | | | | | | | | | | | | | | | | | | | | | | | | | | | | | | | | | |
| | REINF | | | | | | | | | | | | | | | | | | | | | | | | | | | | | | | | | | |
| | TIES | | | | | | | | | | | | | | | | | | | | | | | | | | | | | | | | | | |
| | TYPE | | | | | | | | | | | | | | | | | | | | | | | | | | | | | | | | | | |
| LEVEL FOUR | SIZE | | | | | | | | | | | | | | | | | | | | | | | | | | | | | | | | | | |
| | REINF | | | | | | | | | | | | | | | | | | | | | | | | | | | | | | | | | | |
| | TIES | | | | | | | | | | | | | | | | | | | | | | | | | | | | | | | | | | |
| | TYPE | | | | | | | | | | | | | | | | | | | | | | | | | | | | | | | | | | |
| LEVEL THREE | SIZE | | | | | | | | | | | | | | | | | | | | | | | | | | | | | | | | | | |
| | REINF | | | | | | | | | | | | | | | | | | | | | | | | | | | | | | | | | | |
| | TIES | | | | | | | | | 14 | | | | | | | | | | | | | | | | | | | | | | | | 14 | |
| | TYPE | | | | | | | | | | | | | | | | | | | | | | | | | | | | | | | | | | |
| LEVEL TWO | SIZE | | | | | 16"x16" | 16"x16" | 16"x16" | 16"x16" | 16"x16" | | | | | | | | | | | | | | | | | | | 16"x16" | 16"x16" | 16"x16" | 16"x16" | 16"x16" | |
| | REINF | | | | | 4 #8 | 4 #8 | 4 #8 | 4 #8 | 4 #8 | | | | | | | | | | | | | | | | | | | 4 #8 | 4 #8 | 4 #8 | 4 #8 | 4 #8 | |
| | TIES | | | | | #3 @ 16" | #3 @ 16" | #3 @ 16" | #3 @ 16" | #3 @ 16" | | | | | | | | | | | | | | | | | | | #3 @ 16" | #3 @ 16" | #3 @ 16" | #3 @ 16" | #3 @ 16" | |
| | TYPE | | | | | T1 | T1 | T1 | T1 | T1 | | | 2 | | | | | | | | | | | | | | | | T1 | T1 | T1 | T1 | T1 | |
| LEVEL ONE | SIZE | 24"x24" | 24"x24" | 24"x24" | 24"x24" | 24"x24" | 24"x24" | 24"x24" | 24"x24" | | 24"x24" | | | 24"x24" | 24"x24" | 24"x24" | 24"x24" | 24"x24" | | | | | | | 24"x24" | 24"x24" | 24"x24" | 24"x24" | 24"x24" | 24"x24" | 24"x24" | 24"x24" | 24"x24" | | 24"x24" |
| | REINF | 8 #8 | 8 #8 | 8 #8 | 8 #8 | 8 #8 | 8 #9 | 8 #9 | 8 #9 | | 8 #9 | | | 8 #8 | 8 #8 | 8 #8 | 8 #8 | 8 #8 | | | | | | | 8 #8 | 8 #8 | 8 #8 | 8 #8 | 8 #8 | 8 #9 | 8 #9 | 8 #9 | 8 #9 | | 8 #9 |
| | TIES | #3 @ 16" | #3 @ 16" | #3 @ 16" | #3 @ 16" | #3 @ 16" | #3 @ 16" | #3 @ 16" | #3 @ 18" | | #3 @ 18" | | | #3 @ 16" | #3 @ 16" | #3 @ 16" | #3 @ 16" | #3 @ 16" | | | | | | | #3 @ 16" | #3 @ 16" | #3 @ 16" | #3 @ 16" | #3 @ 16" | #3 @ 18" | #3 @ 18" | #3 @ 18" | #3 @ 18" | | #3 @ 18" |
| | TYPE | T2 | T2 | T2 | T2 | T2 | T2 | T2 | T2 | | T2 | | | T2 | T2 | T2 | T2 | T2 | | | | | | | T2 | T2 | T2 | T2 | T2 | T2 | T2 | T2 | T2 | | T2 |
| GARAGE LEVEL | SIZE | 24"x24" | 24"x24" | 24"x24" | 24"x24" | 24"x24" | 24"x24" | 24"x24" | 24"x24" | | 24"x24" | 24"x24" | 24"x24" | 24"x24" | 24"x24" | 24"x24" | 24"x24" | 24"x24" | 24"x24" | 24"x24" | 24"x24" | 24"x24" | 24"x24" | 24"x24" | 24"x24" | 24"x24" | 24"x24" | 24"x24" | 24"x24" | 24"x24" | 24"x24" | 24"x24" | | 24"x24" |
| | REINF | 8 #8 | 8 #8 | 8 #8 | 8 #8 | 8 #8 | 8 #9 | 8 #9 | 8 #9 | | 8 #9 | 8 #8 | 8 #8 | 8 #8 | 8 #8 | 8 #8 | 8 #8 | 8 #8 | 8 #8 | 8 #9 | 8 #9 | 8 #9 | 8 #8 | 8 #8 | 8 #8 | 8 #8 | 8 #8 | 8 #8 | 8 #8 | 8 #9 | 8 #9 | 8 #9 | 4 #8 | 8 #9 |
| | TIES | #3 @ 10" | #3 @ 10" | #3 @ 10" | #3 @ 10" | #3 @ 10" | #3 @ 10" | #3 @ 10" | #3 @ 10" | 2 | #3 @ 10" | #3 @ 10" | #3 @ 10" | #3 @ 10" | #3 @ 10" | #3 @ 10" | #3 @ 10" | #3 @ 10" | #3 @ 10" | #3 @ 10" | #3 @ 10" | #3 @ 10" | #3 @ 10" | #3 @ 10" | #3 @ 10" | #3 @ 10" | #3 @ 10" | #3 @ 10" | #3 @ 10" | #3 @ 10" | #3 @ 10" | #3 @ 10" | #3 @ 10" | | #3 @ 10" |
| | TYPE | T2 | T2 | T2 | T2 | T2 | T2 | T2 | T2 | | T2 | T2 | T2 | T2 | T2 | T2 | T2 | T2 | T2 | T2 | T2 | T2 | T2 | T2 | T2 | T2 | T2 | T2 | T2 | T2 | T2 | T2 | T2 | | T2 |
| DOWELS | | 8 #8 | 8 #8 | 8 #8 | 8 #8 | 8 #8 | 8 #9 | 8 #9 | 8 #9 | 4 #8 | 8 #9 | 8 #8 | 8 #8 | 8 #8 | 8 #8 | 8 #8 | 8 #8 | 8 #8 | 8 #8 | 8 #8 | 8 #8 | 8 #8 | 8 #8 | 8 #8 | 8 #8 | 8 #8 | 8 #8 | 8 #8 | 8 #8 | 8 #9 | 8 #9 | 8 #9 | 4 #8 | 8 #9 |
| REMARKS | | – | – | – | – | – | – | – | – | – | – | – | – | – | – | – | – | – | – | – | – | – | – | – | – | – | – | – | – | – | – | – | – | – | – |
| FOUNDATION SERVICE LOAD (k) | | 312 | 247 | 247 | 247 | 315 | 425 | 442 | 442 | – | 377 | 165 | 165 | 247 | 247 | 267 | 322 | 330 | 153 | 153 | 153 | 125 | 67 | 81 | 221 | 312 | 247 | 247 | 247 | 315 | 425 | 442 | 442 | – | 377 |
| | | | | | | | | | | | | | | | | | | 2 | | | | | | | | | | | | | | | | | |

NOTES:
1. SERVICE LOADS INDICATED INCLUDE DEAD LOAD PLUS LIVE LOAD ONLY.
2. CONCRETE COMPRESSIVE STRENGTH ($f'c$) EQUALS 5000 PSI FOR ALL COLUMNS, UNO.
3. REFER TO S-501 FOR COLUMN DETAILS.
4. REFER TO S-501 FOR MINIMUM COMPRESSION DEVELOPMENT LENGTH TABLE FOR COLUMN DOWELS.
5. REFER TO S-501 FOR MINIMUM COMPRESSION LAP SPLICE LENGTH TABLE FOR COLUMN VERTICAL BARS.

2

PROPERTY OF THE UNITED STATES GOVERNMENT – FOR OFFICIAL USE ONLY. Do not remove this notice. Properly destroy documents when no longer needed.

GENERAL SERVICES ADMINISTRATION
77 FORSYTH STREET
SUITE 600
ATLANTA, GA 30303
TEL: (404)331-3200

AFRH The Premier Retirement Community for America's Veterans
JACOBS PROJECT MANAGEMENT CONSULTANT TO THE GENERAL SERVICES ADMINISTRATION
YATES CONSTRUCTION
SFCS Architecture Engineering Planning Interiors
URS CORPORATION
2020 K ST, NW
SUITE 300
WASHINGTON D.C. 20006

ISSUED FOR CONSTRUCTION

CERTIFICATIONS

DISTRICT OF COLUMBIA MARK W. ZIMPELMAN 8572 REGISTERED PROFESSIONAL ENGINEER 09/08/08

KEY PLAN

REVISION NOTES

| MARK | DATE | DESCRIPTION |
|---|---|---|
| | 01/15/08 | COLUMN FOUNDATION SUBMISSION |
| | 01/15/08 | ISSUED FOR CONSTRUCTION |
| 2 | 02/27/08 | ADD COLUMN REINF AND DETAILS |
| 14 | 04/23/08 | COLUMN REINF FOR UPPER LEVELS |
| 10 | 07/21/08 | REVISED POUR STRIP LOCATION |
| 3 | 09/08/08 | RE-ISSUED FOR CONSTRUCTION |

DRAWING SCALE

CONTRACTORS

| | |
|---|---|
| A/E CON. NO. | GS-04P-07-EX-C-0099 |
| A/E TASK NO. | |
| CONS. CONTR. | |
| CONS. WORK | |
| PRIME A/E | |
| SUB A/E | |
| CONSTR. CON. | |

BUILDING

| | |
|---|---|
| NAME | ARMED FORCES RETIREMENT HOME |
| STREET | 1800 BEACH DRIVE |
| CITY/ST./ZIP | GULFPORT, MS 39507 |
| BUILDING NO. | |
| OTHER BUILDING NOs. | |
| FACILITY CODE | |

PROJECT

| | |
|---|---|
| PROJECT TITLE | ARMED FORCES RETIREMENT HOME GULFPORT, MISSISSIPPI |
| PROJECT DESCRIPTION | NEW CONSTRUCTION |
| PROJECT NO. | 31942982 |
| GSA PM | STEVEN SMITH |
| SUBMISSION | ISSUED FOR CONSTRUCTION |
| SUB. DATE | 09/08/2008 |

DRAWING

| | |
|---|---|
| DRAWING TITLE | COLUMN SCHEDULE |
| FILE NAME | S-604-N0095730.DWG |
| FLOOR NO. | 00 |
| DRAWN BY | JVS DATE DRAFTED: |
| CHECKED BY | MWZ SHEET SIZE: 34 X 44 |
| DRAWING NO. | S 6 04 (DISCIPLINE SHEET TYPE SEQUENCE) |
| | SHEET 000 OF 000 |

## COLUMN SCHEDULE

| LEVEL / COLUMN MARK | | N-15 | P-15 | Q-15 | R-15 | S-15 | U-15 | V.9-15 | X-15 | Y-15 | Z-15 | Y-15.8 | J.4-15.9 | K-15.9 | L-15.9 | L8-15.9 | B-16 | D-16 | E-16 | F-16 | G-16 | H-16 | J-16 | L-16 | M-16 | N-16 | P-16 | Q-16 | R-16 | S-16 | U-16 | V.5-16 | X-16 | W.9-16.8 | D-17 |
|---|---|---|---|---|---|---|---|---|---|---|---|---|---|---|---|---|---|---|---|---|---|---|---|---|---|---|---|---|---|---|---|---|---|---|---|
| ROOF/ PH FL | SIZE | | | | | | | | | | | | | | | | | | | | | | | | | | | | | | | | | | 16"x16" |
| | REINF | | | | | | | | | | | | | | | | | | | | | | | | | | | | | | | | | | 4 #8 |
| | TIES | | | | | | | | | | | | | | | | | | | | | | | | | | | | | | | | | | #3 @ 16" |
| | TYPE | | | | | | | | | | | | | | | | | | | | | | | | | | | | | | | | | | T1 |
| LEVEL EIGHT | SIZE | | | | | | | | | | | | | | | | | 16"x16" | 16"x16" | 16"x16" | 16"x16" | 16"x16" | 16"x16" | 16"x16" | 16"x16" | 16"x16" | 16"x16" | 16"x16" | 16"x16" | 16"x16" | | | | | 16"x16" |
| | REINF | | | | | | | | | | | | | | | | | 4 #8 | 4 #8 | 4 #8 | 4 #8 | 4 #8 | 4 #8 | 4 #8 | 4 #8 | 4 #8 | 4 #8 | 4 #8 | 4 #8 | 4 #8 | | | | | 4 #8 |
| | TIES | | | | | | | | | | | | | | | | | #3 @ 16" | #3 @ 16" | #3 @ 16" | #3 @ 16" | #3 @ 16" | #3 @ 16" | #3 @ 16" | #3 @ 16" | #3 @ 16" | #3 @ 16" | #3 @ 16" | #3 @ 16" | #3 @ 16" | | | | | #3 @ 16" |
| | TYPE | | | | | | | | | | | | | | | | | T1 | T1 | T1 | T1 | T1 | T1 | T1 | T1 | T1 | T1 | T1 | T1 | T1 | | | | | T1 |
| LEVEL SEVEN | SIZE | | | | | | | | | | | | | | | | | 16"x16" | 16"x16" | 16"x16" | 16"x16" | 16"x16" | 16"x16" | 16"x16" | 16"x16" | 16"x16" | 16"x16" | 16"x16" | 16"x16" | 16"x16" | | | | | 16"x16" |
| | REINF | | | | | | | | | | | | | | | | | 4 #8 | 4 #8 | 4 #8 | 4 #8 | 4 #8 | 4 #8 | 4 #8 | 4 #8 | 4 #8 | 4 #8 | 4 #8 | 4 #8 | 4 #8 | | | | | 4 #8 |
| | TIES | | | | | | | | | | | | | | | | | #3 @ 16" | #3 @ 16" | #3 @ 16" | #3 @ 16" | #3 @ 16" | #3 @ 16" | #3 @ 16" | #3 @ 16" | #3 @ 16" | #3 @ 16" | #3 @ 16" | #3 @ 16" | #3 @ 16" | | | | | #3 @ 16" |
| | TYPE | | | | | | | | | | | | | | | | | T1 | T1 | T1 | T1 | T1 | T1 | T1 | T1 | T1 | T1 | T1 | T1 | T1 | | | | | T1 |
| LEVEL SIX | SIZE | | | | | | | | | | | | | | | | | 16"x16" | 16"x16" | 16"x16" | 16"x16" | 16"x16" | 16"x16" | 16"x16" | 16"x16" | 16"x16" | 16"x16" | 16"x16" | 16"x16" | 16"x16" | | | | | 16"x16" |
| | REINF | | | | | | | | | | | | | | | | | 4 #8 | 4 #8 | 4 #8 | 4 #8 | 4 #8 | 4 #8 | 4 #8 | 4 #8 | 4 #8 | 4 #8 | 4 #8 | 4 #8 | 4 #8 | | | | | 4 #8 |
| | TIES | | | | | | | | | | | | | | | | | #3 @ 16" | #3 @ 16" | #3 @ 16" | #3 @ 16" | #3 @ 16" | #3 @ 16" | #3 @ 16" | #3 @ 16" | #3 @ 16" | #3 @ 16" | #3 @ 16" | #3 @ 16" | #3 @ 16" | | | | | #3 @ 16" |
| | TYPE | | | | | | | | | | | | | | | | | T1 | T1 | T1 | T1 | T1 | T1 | T1 | T1 | T1 | T1 | T1 | T1 | T1 | | | | | T1 |
| LEVEL FIVE | SIZE | | | | | | | | | | | | | | | | | 16"x16" | 16"x16" | 16"x16" | 16"x16" | 16"x16" | 16"x16" | 16"x16" | 16"x16" | 16"x16" | 16"x16" | 16"x16" | 16"x16" | 16"x16" | | | | | 16"x16" |
| | REINF | | | | | | | | | | | | | | | | | 4 #8 | 4 #8 | 4 #8 | 4 #8 | 4 #8 | 4 #8 | 4 #8 | 4 #8 | 4 #8 | 4 #8 | 4 #8 | 4 #8 | 4 #8 | | | | | 4 #8 |
| | TIES | | | | | | | | | | | | | | | | | #3 @ 16" | #3 @ 16" | #3 @ 16" | #3 @ 16" | #3 @ 16" | #3 @ 16" | #3 @ 16" | #3 @ 16" | #3 @ 16" | #3 @ 16" | #3 @ 16" | #3 @ 16" | #3 @ 16" | | | | | #3 @ 16" |
| | TYPE | | | | | | | | | | | | | | | | | T1 | T1 | T1 | T1 | T1 | T1 | T1 | T1 | T1 | T1 | T1 | T1 | T1 | | | | | T1 |
| LEVEL FOUR | SIZE | | | | | | | | | | | | | | | | | 16"x16" | 16"x16" | 16"x16" | 16"x16" | 16"x16" | 16"x16" | 16"x16" | 16"x16" | 16"x16" | 16"x16" | 16"x16" | 16"x16" | 16"x16" | | | | | 16"x16" |
| | REINF | | | | | | | | | | | | | | | | | 4 #8 | 4 #8 | 4 #8 | 4 #8 | 4 #8 | 4 #8 | 4 #8 | 4 #8 | 4 #8 | 4 #8 | 4 #8 | 4 #8 | 4 #8 | | | | | 4 #8 |
| | TIES | | | | | | | | | | | | | | | | | #3 @ 16" | #3 @ 16" | #3 @ 16" | #3 @ 16" | #3 @ 16" | #3 @ 16" | #3 @ 16" | #3 @ 16" | #3 @ 16" | #3 @ 16" | #3 @ 16" | #3 @ 16" | #3 @ 16" | | | | | #3 @ 16" |
| | TYPE | | | | | | | | | | | | | | | | | T1 | T1 | T1 | T1 | T1 | T1 | T1 | T1 | T1 | T1 | T1 | T1 | T1 | | | | | T1 |
| LEVEL THREE | SIZE | | | | | | | | | | | | | | | | | 16"x16" | 16"x16" | 16"x16" | 16"x16" | 16"x16" | 16"x16" | 16"x16" | 16"x16" | 16"x16" | 16"x16" | 16"x16" | 16"x16" | 16"x16" | | | | | 16"x16" |
| | REINF | | | | | | | | | | | | | | | | | 4 #8 | 4 #8 | 4 #8 | 4 #8 | 4 #8 | 4 #8 | 4 #8 | 4 #8 | 4 #8 | 4 #8 | 4 #8 | 4 #8 | 4 #8 | | | | | 4 #8 |
| | TIES | | | | | | | | | | | | | | | | | #3 @ 16" | #3 @ 16" | #3 @ 16" | #3 @ 16" | #3 @ 16" | #3 @ 16" | #3 @ 16" | #3 @ 16" | #3 @ 16" | #3 @ 16" | #3 @ 16" | #3 @ 16" | #3 @ 16" | | | | | #3 @ 16" |
| | TYPE | | | | | | | | | | | | | | | | | T1 | T1 | T1 | T1 | T1 | T1 | T1 | T1 | T1 | T1 | T1 | T1 | T1 | | | | | T1 |
| LEVEL TWO | SIZE | | | | | | | | | | | | 16"x16" | 16"x16" | 16"x16" | 16"x16" | | 16"x16" | 16"x16" | 16"x16" | 16"x16" | 16"x16" | 16"x16" | 16"x16" | 16"x16" | 16"x16" | 16"x16" | 16"x16" | 16"x16" | 16"x16" | | | | | 16"x16" |
| | REINF | | | | | | | | | | | | 4 #8 | 4 #8 | 4 #8 | 4 #8 | | 4 #8 | 4 #8 | 4 #8 | 4 #8 | 4 #8 | 4 #8 | 4 #8 | 4 #8 | 4 #8 | 4 #8 | 4 #8 | 4 #8 | 4 #8 | | | | | 4 #8 |
| | TIES | | | | | | | | | | | | #3 @ 16" | #3 @ 16" | #3 @ 16" | #3 @ 16" | | #3 @ 16" | #3 @ 16" | #3 @ 16" | #3 @ 16" | #3 @ 16" | #3 @ 16" | #3 @ 16" | #3 @ 16" | #3 @ 16" | #3 @ 16" | #3 @ 16" | #3 @ 16" | #3 @ 16" | | | | | #3 @ 16" |
| | TYPE | | | | | | | | | | | | T1 | T1 | T1 | T1 | | T1 | T1 | T1 | T1 | T1 | T1 | T1 | T1 | T1 | T1 | T1 | T1 | T1 | | | | | T1 |
| LEVEL ONE | SIZE | | | 24"x24" | 24"x24" | 24"x24" | 24"x24" | 24"x24" | | | | | | | | | 24"x24" | 24"x24" | 24"x24" | 24"x24" | 24"x24" | 24"x24" | 24"x24" | 24"x24" | 24"x24" | 24"x24" | 24"x24" | 24"x24" | 24"x24" | 24"x24" | 24"x24" | | | | 24"x24" |
| | REINF | | | 8 #8 | 8 #8 | 8 #8 | 8 #8 | 8 #8 | | | | | | | | | 8 #8 | 12 #8 | 12 #8 | 12 #8 | 12 #8 | 12 #8 | 12 #9 | 12 #9 | 12 #9 | 12 #9 | 12 #8 | 12 #8 | 12 #8 | 12 #8 | 8 #8 | | | | 12 #9 |
| | TIES | | | #3 @ 16" | #3 @ 16" | #3 @ 16" | #3 @ 16" | #3 @ 16" | | | | | | | | | #3 @ 16" | #3 @ 16" | #3 @ 16" | #3 @ 16" | #3 @ 16" | #3 @ 16" | #3 @ 18" | #3 @ 18" | #3 @ 18" | #3 @ 18" | #3 @ 16" | #3 @ 16" | #3 @ 16" | #3 @ 16" | #3 @ 16" | | | | #3 @ 18" |
| | TYPE | | | T2 | T2 | T2 | T2 | T2 | | | | | | | | | T2 | T3 | T3 | T3 | T3 | T3 | T3 | T3 | T3 | T3 | T3 | T3 | T3 | T3 | T2 | | | | T3 |
| GARAGE LEVEL | SIZE | 24"x24" | 24"x24" | 24"x24" | 24"x24" | 24"x24" | 24"x24" | 24"x24" | 24"x24" | 24"x24" | 24"x24" | 24"x24" | | | | | 24"x24" | 24"x24" | 24"x24" | 24"x24" | 24"x24" | 24"x24" | 24"x24" | 24"x24" | 24"x24" | 24"x24" | 24"x24" | 24"x24" | 24"x24" | 24"x24" | 24"x24" | 24"x24" | 24"x24" | 24"x24" | 24"x24" |
| | REINF | 8 #8 | 8 #8 | 8 #8 | 8 #8 | 8 #8 | 8 #8 | 8 #8 | 8 #8 | 8 #8 | 8 #8 | 8 #8 | | | | | 8 #8 | 12 #8 | 12 #8 | 12 #8 | 12 #8 | 12 #8 | 12 #9 | 12 #9 | 12 #9 | 12 #9 | 12 #8 | 12 #8 | 12 #8 | 12 #8 | 8 #8 | 8 #8 | 8 #8 | 8 #8 | 12 #9 |
| | TIES | #3 @ 10" | #3 @ 10" | #3 @ 10" | #3 @ 10" | #3 @ 10" | #3 @ 10" | #3 @ 10" | #3 @ 10" | #3 @ 10" | #3 @ 10" | #3 @ 10" | | | | | #3 @ 10" | #3 @ 10" | #3 @ 10" | #3 @ 10" | #3 @ 10" | #3 @ 10" | #3 @ 10" | #3 @ 10" | #3 @ 10" | #3 @ 10" | #3 @ 10" | #3 @ 10" | #3 @ 10" | #3 @ 10" | #3 @ 10" | #3 @ 10" | #3 @ 10" | #3 @ 10" | #3 @ 10" |
| | TYPE | T2 | T2 | T2 | T2 | T2 | T2 | T2 | T2 | T2 | T2 | T2 | | | | | T2 | T3 | T3 | T3 | T3 | T3 | T3 | T3 | T3 | T3 | T3 | T3 | T3 | T3 | T2 | T2 | T2 | T2 | T3 |
| DOWELS | | 8 #8 | 8 #8 | 8 #8 | 8 #8 | 8 #8 | 8 #8 | 8 #8 | 8 #8 | 8 #8 | 8 #8 | 8 #8 | 4 #6 | 4 #6 | 4 #6 | 4 #6 | 8 #8 | 12 #8 | 12 #8 | 12 #8 | 12 #8 | 12 #8 | 12 #9 | 12 #9 | 12 #9 | 12 #9 | 12 #8 | 12 #8 | 12 #8 | 12 #8 | 8 #8 | 8 #8 | 8 #8 | 8 #8 | 12 #9 |
| REMARKS | | – | – | – | – | – | – | – | – | – | – | – | – | – | – | – | – | – | – | – | – | – | – | – | – | – | – | – | – | – | – | – | – | – | – |
| FOUNDATION SERVICE LOAD (k) | | 165 | 165 | 247 | 247 | 267 | 272 | 330 | 125 | 182 | 108 | 125 | – | – | – | – | 221 | 542 | 571 | 571 | 571 | 571 | 611 | 736 | 682 | 693 | 571 | 571 | 571 | 542 | 213 | 125 | 125 | 96 | 645 |

## COLUMN SCHEDULE

| LEVEL / COLUMN MARK | | E-17 | F-17 | G-17 | H-17 | J-17 | L-17 | M-17 | N-17 | P-17 | Q-17 | R-17 | S-17 | V.5-17 | V.2-17.6 | A-17.8 | V-17.8 | B-18 | D-18 | E-18 | F-18 | G-18 | H-18 | J-18 | L-18 | M-18 | N-18 | P-18 | Q-18 | R-18 | S-18 | U-18 | B-19 | D-19 | E-19 |
|---|---|---|---|---|---|---|---|---|---|---|---|---|---|---|---|---|---|---|---|---|---|---|---|---|---|---|---|---|---|---|---|---|---|---|---|
| ROOF/ PH FL | SIZE | 16"x16" | 16"x16" | 16"x16" | 16"x16" | 16"x16" | 16"x16" | | | | | | | | | 20"x20" | 20"x20" | | 16"x16" | 16"x16" | 16"x16" | 16"x16" | 16"x16" | 16"x16" | 16"x16" | | | | | | | | | | |
| | REINF | 4 #8 | 4 #8 | 4 #8 | 4 #8 | 4 #8 | 4 #8 | | | | | | | | | 8 #7 | 8 #7 | | 4 #8 | 4 #8 | 4 #8 | 4 #8 | 4 #8 | 4 #8 | 4 #8 | | | | | | | | | | |
| | TIES | #3 @ 16" | #3 @ 16" | #3 @ 16" | #3 @ 16" | #3 @ 16" | #3 @ 16" | | | | | | | | | #3 @ 14" | #3 @ 14" | | #3 @ 16" | #3 @ 16" | #3 @ 16" | #3 @ 16" | #3 @ 16" | #3 @ 16" | #3 @ 16" | | | | | | | | | | |
| | TYPE | T1 | T1 | T1 | T1 | T1 | T1 | | | | | | | | | T2 | T2 | | T1 | T1 | T1 | T1 | T1 | T1 | T1 | | | | | | | | | | |
| LEVEL EIGHT | SIZE | 16"x16" | 16"x16" | 16"x16" | 16"x16" | 16"x16" | 16"x16" | 16"x16" | 16"x16" | 16"x16" | 16"x16" | 16"x16" | 16"x16" | | | 20"x20" | 20"x20" | | 16"x16" | 16"x16" | 16"x16" | 16"x16" | 16"x16" | 16"x16" | 16"x16" | 16"x16" | 16"x16" | 16"x16" | 16"x16" | 16"x16" | 16"x16" | 16"x16" | | | 16"x16" | 16"x16" |
| | REINF | 4 #8 | 4 #8 | 4 #8 | 4 #8 | 4 #8 | 4 #8 | 4 #8 | 4 #8 | 4 #8 | 4 #8 | 4 #8 | 4 #8 | | | 8 #7 | 8 #7 | | 4 #8 | 4 #8 | 4 #8 | 4 #8 | 4 #8 | 4 #8 | 4 #8 | 4 #8 | 4 #8 | 4 #8 | 4 #8 | 4 #8 | 4 #8 | 4 #8 | | | 4 #8 | 4 #8 |
| | TIES | #3 @ 16" | #3 @ 16" | #3 @ 16" | #3 @ 16" | #3 @ 16" | #3 @ 16" | #3 @ 16" | #3 @ 16" | #3 @ 16" | #3 @ 16" | #3 @ 16" | #3 @ 16" | | | #3 @ 14" | #3 @ 14" | | #3 @ 16" | #3 @ 16" | #3 @ 16" | #3 @ 16" | #3 @ 16" | #3 @ 16" | #3 @ 16" | #3 @ 16" | #3 @ 16" | #3 @ 16" | #3 @ 16" | #3 @ 16" | #3 @ 16" | #3 @ 16" | | | #3 @ 16" | #3 @ 16" |
| | TYPE | T1 | T1 | T1 | T1 | T1 | T1 | T1 | T1 | T1 | T1 | T1 | T1 | | | T2 | T2 | | T1 | T1 | T1 | T1 | T1 | T1 | T1 | T1 | T1 | T1 | T1 | T1 | T1 | T1 | | | T1 | T1 |
| LEVEL SEVEN | SIZE | 16"x16" | 16"x16" | 16"x16" | 16"x16" | 16"x16" | 16"x16" | 16"x16" | 16"x16" | 16"x16" | 16"x16" | 16"x16" | 16"x16" | | | 20"x20" | 20"x20" | | 16"x16" | 16"x16" | 16"x16" | 16"x16" | 16"x16" | 16"x16" | 16"x16" | 16"x16" | 16"x16" | 16"x16" | 16"x16" | 16"x16" | 16"x16" | 16"x16" | | | 16"x16" | 16"x16" |
| | REINF | 4 #8 | 4 #8 | 4 #8 | 4 #8 | 4 #8 | 4 #8 | 4 #8 | 4 #8 | 4 #8 | 4 #8 | 4 #8 | 4 #8 | | | 8 #7 | 8 #7 | | 4 #8 | 4 #8 | 4 #8 | 4 #8 | 4 #8 | 4 #8 | 4 #8 | 4 #8 | 4 #8 | 4 #8 | 4 #8 | 4 #8 | 4 #8 | 4 #8 | | | 4 #8 | 4 #8 |
| | TIES | #3 @ 16" | #3 @ 16" | #3 @ 16" | #3 @ 16" | #3 @ 16" | #3 @ 16" | #3 @ 16" | #3 @ 16" | #3 @ 16" | #3 @ 16" | #3 @ 16" | #3 @ 16" | | | #3 @ 14" | #3 @ 14" | | #3 @ 16" | #3 @ 16" | #3 @ 16" | #3 @ 16" | #3 @ 16" | #3 @ 16" | #3 @ 16" | #3 @ 16" | #3 @ 16" | #3 @ 16" | #3 @ 16" | #3 @ 16" | #3 @ 16" | #3 @ 16" | | | #3 @ 16" | #3 @ 16" |
| | TYPE | T1 | T1 | T1 | T1 | T1 | T1 | T1 | T1 | T1 | T1 | T1 | T1 | | | T2 | T2 | | T1 | T1 | T1 | T1 | T1 | T1 | T1 | T1 | T1 | T1 | T1 | T1 | T1 | T1 | | | T1 | T1 |
| LEVEL SIX | SIZE | 16"x16" | 16"x16" | 16"x16" | 16"x16" | 16"x16" | 16"x16" | 16"x16" | 16"x16" | 16"x16" | 16"x16" | 16"x16" | 16"x16" | | | 20"x20" | 20"x20" | | 16"x16" | 16"x16" | 16"x16" | 16"x16" | 16"x16" | 16"x16" | 16"x16" | 16"x16" | 16"x16" | 16"x16" | 16"x16" | 16"x16" | 16"x16" | 16"x16" | | | 16"x16" | 16"x16" |
| | REINF | 4 #8 | 4 #8 | 4 #8 | 4 #8 | 4 #8 | 4 #8 | 4 #8 | 4 #8 | 4 #8 | 4 #8 | 4 #8 | 4 #8 | | | 8 #7 | 8 #7 | | 4 #8 | 4 #8 | 4 #8 | 4 #8 | 4 #8 | 4 #8 | 4 #8 | 4 #8 | 4 #8 | 4 #8 | 4 #8 | 4 #8 | 4 #8 | 4 #8 | | | 4 #8 | 4 #8 |
| | TIES | #3 @ 16" | #3 @ 16" | #3 @ 16" | #3 @ 16" | #3 @ 16" | #3 @ 16" | #3 @ 16" | #3 @ 16" | #3 @ 16" | #3 @ 16" | #3 @ 16" | #3 @ 16" | | | #3 @ 14" | #3 @ 14" | | #3 @ 16" | #3 @ 16" | #3 @ 16" | #3 @ 16" | #3 @ 16" | #3 @ 16" | #3 @ 16" | #3 @ 16" | #3 @ 16" | #3 @ 16" | #3 @ 16" | #3 @ 16" | #3 @ 16" | #3 @ 16" | | | #3 @ 16" | #3 @ 16" |
| | TYPE | T1 | T1 | T1 | T1 | T1 | T1 | T1 | T1 | T1 | T1 | T1 | T1 | | | T2 | T2 | | T1 | T1 | T1 | T1 | T1 | T1 | T1 | T1 | T1 | T1 | T1 | T1 | T1 | T1 | | | T1 | T1 |
| LEVEL FIVE | SIZE | 16"x16" | 16"x16" | 16"x16" | 16"x16" | 16"x16" | 16"x16" | 16"x16" | 16"x16" | 16"x16" | 16"x16" | 16"x16" | 16"x16" | | | 20"x20" | 20"x20" | | 16"x16" | 16"x16" | 16"x16" | 16"x16" | 16"x16" | 16"x16" | 16"x16" | 16"x16" | 16"x16" | 16"x16" | 16"x16" | 16"x16" | 16"x16" | 16"x16" | | | 16"x16" | 16"x16" |
| | REINF | 4 #8 | 4 #8 | 4 #8 | 4 #8 | 4 #8 | 4 #8 | 4 #8 | 4 #8 | 4 #8 | 4 #8 | 4 #8 | 4 #8 | | | 8 #7 | 8 #7 | | 4 #8 | 4 #8 | 4 #8 | 4 #8 | 4 #8 | 4 #8 | 4 #8 | 4 #8 | 4 #8 | 4 #8 | 4 #8 | 4 #8 | 4 #8 | 4 #8 | | | 4 #8 | 4 #8 |
| | TIES | #3 @ 16" | #3 @ 16" | #3 @ 16" | #3 @ 16" | #3 @ 16" | #3 @ 16" | #3 @ 16" | #3 @ 16" | #3 @ 16" | #3 @ 16" | #3 @ 16" | #3 @ 16" | | | #3 @ 14" | #3 @ 14" | | #3 @ 16" | #3 @ 16" | #3 @ 16" | #3 @ 16" | #3 @ 16" | #3 @ 16" | #3 @ 16" | #3 @ 16" | #3 @ 16" | #3 @ 16" | #3 @ 16" | #3 @ 16" | #3 @ 16" | #3 @ 16" | | | #3 @ 16" | #3 @ 16" |
| | TYPE | T1 | T1 | T1 | T1 | T1 | T1 | T1 | T1 | T1 | T1 | T1 | T1 | | | T2 | T2 | | T1 | T1 | T1 | T1 | T1 | T1 | T1 | T1 | T1 | T1 | T1 | T1 | T1 | T1 | | | T1 | T1 |
| LEVEL FOUR | SIZE | 16"x16" | 16"x16" | 16"x16" | 16"x16" | 16"x16" | 16"x16" | 16"x16" | 16"x16" | 16"x16" | 16"x16" | 16"x16" | 16"x16" | | | 20"x20" | 20"x20" | | 16"x16" | 16"x16" | 16"x16" | 16"x16" | 16"x16" | 16"x16" | 16"x16" | 16"x16" | 16"x16" | 16"x16" | 16"x16" | 16"x16" | 16"x16" | 16"x16" | | | 16"x16" | 16"x16" |
| | REINF | 4 #8 | 4 #8 | 4 #8 | 4 #8 | 4 #8 | 4 #8 | 4 #8 | 4 #8 | 4 #8 | 4 #8 | 4 #8 | 4 #8 | | | 8 #7 | 8 #7 | | 4 #8 | 4 #8 | 4 #8 | 4 #8 | 4 #8 | 4 #8 | 4 #8 | 4 #8 | 4 #8 | 4 #8 | 4 #8 | 4 #8 | 4 #8 | 4 #8 | | | 4 #8 | 4 #8 |
| | TIES | #3 @ 16" | #3 @ 16" | #3 @ 16" | #3 @ 16" | #3 @ 16" | #3 @ 16" | #3 @ 16" | #3 @ 16" | #3 @ 16" | #3 @ 16" | #3 @ 16" | #3 @ 16" | | | #3 @ 14" | #3 @ 14" | | #3 @ 16" | #3 @ 16" | #3 @ 16" | #3 @ 16" | #3 @ 16" | #3 @ 16" | #3 @ 16" | #3 @ 16" | #3 @ 16" | #3 @ 16" | #3 @ 16" | #3 @ 16" | #3 @ 16" | #3 @ 16" | | | #3 @ 16" | #3 @ 16" |
| | TYPE | T1 | T1 | T1 | T1 | T1 | T1 | T1 | T1 | T1 | T1 | T1 | T1 | | | T2 | T2 | | T1 | T1 | T1 | T1 | T1 | T1 | T1 | T1 | T1 | T1 | T1 | T1 | T1 | T1 | | | T1 | T1 |
| LEVEL THREE | SIZE | 16"x16" | 16"x16" | 16"x16" | 16"x16" | 16"x16" | 16"x16" | 16"x16" | 16"x16" | 16"x16" | 16"x16" | 16"x16" | 16"x16" | | | 20"x20" | 20"x20" | | 16"x16" | 16"x16" | 16"x16" | 16"x16" | 16"x16" | 16"x16" | 16"x16" | 16"x16" | 16"x16" | 16"x16" | 16"x16" | 16"x16" | 16"x16" | 16"x16" | | | 16"x16" | 16"x16" |
| | REINF | 4 #8 | 4 #8 | 4 #8 | 4 #8 | 4 #8 | 4 #8 | 4 #8 | 4 #8 | 4 #8 | 4 #8 | 4 #8 | 4 #8 | | | 8 #8 | 8 #8 | | 4 #8 | 4 #8 | 4 #8 | 4 #8 | 4 #8 | 4 #8 | 4 #8 | 4 #8 | 4 #8 | 4 #8 | 4 #8 | 4 #8 | 4 #8 | 4 #8 | | | 4 #8 | 4 #8 |
| | TIES | #3 @ 16" | #3 @ 16" | #3 @ 16" | #3 @ 16" | #3 @ 16" | #3 @ 16" | #3 @ 16" | #3 @ 16" | #3 @ 16" | #3 @ 16" | #3 @ 16" | #3 @ 16" | | | #3 @ 16" | #3 @ 16" | | #3 @ 16" | #3 @ 16" | #3 @ 16" | #3 @ 16" | #3 @ 16" | #3 @ 16" | #3 @ 16" | #3 @ 16" | #3 @ 16" | #3 @ 16" | #3 @ 16" | #3 @ 16" | #3 @ 16" | #3 @ 16" | | | #3 @ 16" | #3 @ 16" |
| | TYPE | T1 | T1 | T1 | T1 | T1 | T1 | T1 | T1 | T1 | T1 | T1 | T1 | | | T2 | T2 | | T1 | T1 | T1 | T1 | T1 | T1 | T1 | T1 | T1 | T1 | T1 | T1 | T1 | T1 | | | T1 | T1 |
| LEVEL TWO | SIZE | 16"x16" | 16"x16" | 16"x16" | 16"x16" | 16"x16" | 16"x16" | 16"x16" | 16"x16" | 16"x16" | 16"x16" | 16"x16" | 16"x16" | | | 20"x20" | 20"x20" | | 16"x16" | 16"x16" | 16"x16" | 16"x16" | 16"x16" | 16"x16" | 16"x16" | 16"x16" | 16"x16" | 16"x16" | 16"x16" | 16"x16" | 16"x16" | 16"x16" | | | 16"x16" | 16"x16" |
| | REINF | 8 #8 | 8 #8 | 8 #8 | 8 #8 | 4 #8 | 8 #8 | 4 #8 | 4 #8 | 4 #8 | 4 #8 | 4 #8 | 4 #8 | | | 8 #8 | 8 #8 | | 4 #8 | 8 #8 | 8 #8 | 8 #8 | 8 #8 | 4 #8 | 8 #8 | 4 #8 | 4 #8 | 4 #8 | 4 #8 | 4 #8 | 4 #8 | | | 4 #8 | 4 #8 |
| | TIES | #3 @ 16" | #3 @ 16" | #3 @ 16" | #3 @ 16" | #3 @ 16" | #3 @ 16" | #3 @ 16" | #3 @ 16" | #3 @ 16" | #3 @ 16" | #3 @ 16" | #3 @ 16" | | | #3 @ 16" | #3 @ 16" | | #3 @ 16" | #3 @ 16" | #3 @ 16" | #3 @ 16" | #3 @ 16" | #3 @ 16" | #3 @ 16" | #3 @ 16" | #3 @ 16" | #3 @ 16" | #3 @ 16" | #3 @ 16" | #3 @ 16" | #3 @ 16" | | | #3 @ 16" | #3 @ 16" |
| | TYPE | T1 | T1 | T1 | T1 | T1 | T1 | T1 | T1 | T1 | T1 | T1 | T1 | | | T2 | T2 | | T1 | T1 | T1 | T1 | T1 | T1 | T1 | T1 | T1 | T1 | T1 | T1 | T1 | T1 | | | T1 | T1 |
| LEVEL ONE | SIZE | 24"x24" | 24"x24" | 24"x24" | 24"x24" | 24"x24" | 24"x24" | 24"x24" | 24"x24" | 24"x24" | 24"x24" | 24"x24" | 24"x24" | | | 20"x20" | 20"x20" | 24"x24" | 24"x24" | 24"x24" | 24"x24" | 24"x24" | 24"x24" | 24"x24" | 24"x24" | 24"x24" | 24"x24" | 24"x24" | 24"x24" | 24"x24" | 24"x24" | 24"x20" | 24"x24" | 24"x24" | 24"x24" |
| | REINF | 12 #9 | 12 #9 | 12 #9 | 12 #9 | 12 #9 | 12 #9 | 12 #8 | 12 #8 | 12 #8 | 12 #8 | 12 #8 | 12 #8 | | | 8 #10 | 8 #10 | 8 #8 | 12 #9 | 12 #9 | 12 #9 | 12 #9 | 12 #9 | 12 #9 | 12 #10 | 12 #10 | 12 #8 | 12 #8 | 12 #8 | 12 #8 | 12 #8 | 8 #8 | 8 #8 | 12 #8 | 12 #8 |
| | TIES | #3 @ 18" | #3 @ 18" | #3 @ 18" | #3 @ 18" | #3 @ 18" | #3 @ 18" | #3 @ 16" | #3 @ 16" | #3 @ 16" | #3 @ 16" | #3 @ 16" | #3 @ 16" | | | #3 @ 18" | #3 @ 18" | #3 @ 16" | #3 @ 18" | #3 @ 18" | #3 @ 18" | #3 @ 18" | #3 @ 18" | #3 @ 18" | #3 @ 18" | #3 @ 18" | #3 @ 16" | #3 @ 16" | #3 @ 16" | #3 @ 16" | #3 @ 16" | #3 @ 16" | #3 @ 16" | #3 @ 16" | #3 @ 16" |
| | TYPE | T3 | T3 | T3 | T3 | T3 | T3 | T3 | T3 | T3 | T3 | T3 | T3 | | | T2 | T2 | T2 | T3 | T3 | T3 | T3 | T3 | T3 | T3 | T3 | T3 | T3 | T3 | T3 | T3 | T2 | T2 | T3 | T3 |
| GARAGE LEVEL | SIZE | 24"x24" | 24"x24" | 24"x24" | 24"x24" | 24"x24" | 24"x24" | 24"x24" | 24"x24" | 24"x24" | 24"x24" | 24"x24" | 24"x24" | 24"x24" | 24"x24" | 20"x20" | 20"x20" | 24"x24" | 24"x24" | 24"x24" | 24"x24" | 24"x24" | 24"x24" | 24"x24" | 24"x24" | 24"x24" | 24"x24" | 24"x24" | 24"x24" | 24"x24" | 24"x24" | 24"x20" | 24"x24" | 24"x24" | 24"x24" |
| | REINF | 12 #9 | 12 #9 | 12 #9 | 12 #9 | 12 #9 | 12 #9 | 12 #8 | 12 #8 | 12 #8 | 12 #8 | 12 #8 | 12 #8 | 8 #8 | 8 #8 | 8 #10 | 8 #10 | 8 #8 | 12 #9 | 12 #9 | 12 #9 | 12 #9 | 12 #9 | 12 #9 | 12 #10 | 12 #10 | 12 #8 | 12 #8 | 12 #8 | 12 #8 | 12 #8 | 8 #8 | 8 #8 | 12 #8 | 12 #8 |
| | TIES | #3 @ 10" | #3 @ 10" | #3 @ 10" | #3 @ 10" | #3 @ 10" | #3 @ 10" | #3 @ 10" | #3 @ 10" | #3 @ 10" | #3 @ 10" | #3 @ 10" | #3 @ 10" | #3 @ 10" | #3 @ 10" | #3 @ 8" | #3 @ 8" | #3 @ 10" | #3 @ 10" | #3 @ 10" | #3 @ 10" | #3 @ 10" | #3 @ 10" | #3 @ 10" | #3 @ 10" | #3 @ 10" | #3 @ 10" | #3 @ 10" | #3 @ 10" | #3 @ 10" | #3 @ 10" | #3 @ 8" | #3 @ 10" | #3 @ 10" | #3 @ 10" |
| | TYPE | T3 | T3 | T3 | T3 | T3 | T3 | T3 | T3 | T3 | T3 | T3 | T3 | T2 | T2 | T2 | T2 | T2 | T3 | T3 | T3 | T3 | T3 | T3 | T3 | T3 | T3 | T3 | T3 | T3 | T3 | T2 | T2 | T3 | T3 |
| DOWELS | | 12 #9 | 12 #9 | 12 #9 | 12 #9 | 12 #9 | 12 #9 | 12 #9 | 12 #8 | 12 #8 | 12 #8 | 12 #8 | 12 #8 | 8 #8 | 8 #8 | 8 #10 | 8 #10 | 8 #8 | 12 #9 | 12 #9 | 12 #9 | 12 #9 | 12 #9 | 12 #9 | 12 #10 | 12 #10 | 12 #8 | 12 #8 | 12 #8 | 12 #8 | 12 #8 | 8 #8 | 8 #8 | 12 #8 | 12 #8 |
| REMARKS | | – | – | – | – | – | – | – | – | – | – | – | – | – | – | – | – | – | – | – | – | – | – | – | – | – | – | – | – | – | – | – | – | – | – |
| FOUNDATION SERVICE LOAD (k) | | 748 | 748 | 748 | 748 | 748 | 860 | 730 | 664 | 664 | 664 | 664 | 581 | 125 | 125 | 468 | 468 | 156 | 606 | 740 | 740 | 740 | 740 | 742 | 852 | 757 | 689 | 689 | 689 | 689 | 606 | 239 | 233 | 572 | 581 |

NOTES:
1. SERVICE LOADS INDICATED INCLUDE DEAD LOAD PLUS LIVE LOAD ONLY.
2. CONCRETE COMPRESSIVE STRENGTH (f'c) EQUALS 5000 PSI FOR ALL COLUMNS, UNO.
3. REFER TO S-501 FOR COLUMN DETAILS.
4. REFER TO S-501 FOR MINIMUM COMPRESSION DEVELOPMENT LENGTH TABLE FOR COLUMN DOWELS.
5. REFER TO S-501 FOR MINIMUM COMPRESSION LAP SPLICE LENGTH TABLE FOR COLUMN VERTICAL BARS.

PROPERTY OF THE UNITED STATES GOVERNMENT – FOR OFFICIAL USE ONLY. Do not remove this notice. Properly destroy documents when no longer needed.

GSA
GENERAL SERVICES ADMINISTRATION
77 FORSYTH STREET
SUITE 600
ATLANTA, GA 30303
TEL: (404)331-3200

AFRH
JE JACOBS
PROJECT MANAGEMENT CONSULTANT TO THE GENERAL SERVICES ADMINISTRATION

YATES CONSTRUCTION

SFCS Architecture Engineering Planning Interiors

URS
URS CORPORATION
2020 K ST, NW
SUITE 300
WASHINGTON D.C. 20006

ISSUED FOR CONSTRUCTION

CERTIFICATIONS: DISTRICT OF COLUMBIA — MARK W. ZIMPELMAN — 8572 — REGISTERED PROFESSIONAL ENGINEER — 09/08/08

KEY PLAN

REVISION NOTES

| MARK | DATE | DESCRIPTION |
|---|---|---|
| | 01/15/08 | COLUMN FOUNDATION SUBMISSION |
| | 01/15/08 | ISSUED FOR CONSTRUCTION |
| 2 | 02/27/08 | ADD COLUMN REINF AND DETAILS |
| 14 | 04/23/08 | COLUMN REINF FOR UPPER LEVELS |
| 23 | 06/10/08 | REVISE OPENINGS & COLUMN SIZE |
| 37 | 09/08/08 | RE-ISSUED FOR CONSTRUCTION |

GRAPHIC SCALE

| | |
|---|---|
| A/E CON. NO. | GS-04P-07-EX-C-0099 |
| A/E TASK NO. | |
| CONS. CONTR. | |
| CONS. WORK | |
| PRIME A/E | |
| SUB A/E | |
| CONSTR. CON. | |
| NAME | ARMED FORCES RETIREMENT HOME |
| STREET | 1800 BEACH DRIVE |
| CITY/ST./ZIP | GULFPORT, MS 39507 |
| BUILDING NO. | |
| OTHER | |
| BUILDING NOs. | |
| FACILITY CODE | |
| PROJECT TITLE | ARMED FORCES RETIREMENT HOME GULFPORT, MISSISSIPPI |
| PROJECT DESCRIPTION | NEW CONSTRUCTION |
| PROJECT NO. | 31942982 |
| GSA PM | STEVEN SMITH |
| SUBMISSION | ISSUED FOR CONSTRUCTION |
| SUB. DATE | 09/08/2008 |
| DRAWING TITLE | COLUMN SCHEDULE |
| FILE NAME | S-605-N0095730.DWG |
| FLOOR NO. | 00 |
| DRAWN BY | JVS — DATE DRAFTED: |
| CHECKED BY | MWZ — SHEET SIZE: 34 X 44 |
| DRAWING NO. | S 6 05 (DISCIPLINE, SHEET TYPE, SEQUENCE) |
| SHEET | 000 OF 000 |

## COLUMN SCHEDULE

| LEVEL / COLUMN MARK | | F-19 | G-19 | H-19 | J-19 | L-19 | L.7-19 | M-19 | N-19 | P-19 | Q-19 | R-19 | S-19 |
|---|---|---|---|---|---|---|---|---|---|---|---|---|---|
| PH ROOF | | | | | | | | | | | | | |
| ROOF/ PH FL | SIZE | | | | | | | | | | | | |
| | REINF | | | | | | | | | | | | |
| | TIES | | | | | | | | | | | | |
| | TYPE | | | | | | | | | | | | |
| LEVEL EIGHT | SIZE | 16"x16" | 16"x16" | 16"x16" | 16"x16" | 16"x16" | | 16"x16" | 16"x16" | 16"x16" | 16"x16" | 16"x16" | 16"x16" |
| | REINF | 4 #8 | 4 #8 | 4 #8 | 4 #8 | 4 #8 | | 4 #8 | 4 #8 | 4 #8 | 4 #8 | 4 #8 | 4 #8 |
| | TIES | #3 @ 16" | #3 @ 16" | #3 @ 16" | #3 @ 16" | #3 @ 16" | | #3 @ 16" | #3 @ 16" | #3 @ 16" | #3 @ 16" | #3 @ 16" | #3 @ 16" |
| | TYPE | T1 | T1 | T1 | T1 | T1 | | T1 | T1 | T1 | T1 | T1 | T1 |
| LEVEL SEVEN | SIZE | 16"x16" | 16"x16" | 16"x16" | 16"x16" | 16"x16" | | 16"x16" | 16"x16" | 16"x16" | 16"x16" | 16"x16" | 16"x16" |
| | REINF | 4 #8 | 4 #8 | 4 #8 | 4 #8 | 4 #8 | | 4 #8 | 4 #8 | 4 #8 | 4 #8 | 4 #8 | 4 #8 |
| | TIES | #3 @ 16" | #3 @ 16" | #3 @ 16" | #3 @ 16" | #3 @ 16" | | #3 @ 16" | #3 @ 16" | #3 @ 16" | #3 @ 16" | #3 @ 16" | #3 @ 16" |
| | TYPE | T1 | T1 | T1 | T1 | T1 | | T1 | T1 | T1 | T1 | T1 | T1 |
| LEVEL SIX | SIZE | 16"x16" | 16"x16" | 16"x16" | 16"x16" | 16"x16" | | 16"x16" | 16"x16" | 16"x16" | 16"x16" | 16"x16" | 16"x16" |
| | REINF | 4 #8 | 4 #8 | 4 #8 | 4 #8 | 4 #8 | | 4 #8 | 4 #8 | 4 #8 | 4 #8 | 4 #8 | 4 #8 |
| | TIES | #3 @ 16" | #3 @ 16" | #3 @ 16" | #3 @ 16" | #3 @ 16" | | #3 @ 16" | #3 @ 16" | #3 @ 16" | #3 @ 16" | #3 @ 16" | #3 @ 16" |
| | TYPE | T1 | T1 | T1 | T1 | T1 | | T1 | T1 | T1 | T1 | T1 | T1 |
| LEVEL FIVE | SIZE | 16"x16" | 16"x16" | 16"x16" | 16"x16" | 16"x16" | | 16"x16" | 16"x16" | 16"x16" | 16"x16" | 16"x16" | 16"x16" |
| | REINF | 4 #8 | 4 #8 | 4 #8 | 4 #8 | 4 #8 | | 4 #8 | 4 #8 | 4 #8 | 4 #8 | 4 #8 | 4 #8 |
| | TIES | #3 @ 16" | #3 @ 16" | #3 @ 16" | #3 @ 16" | #3 @ 16" | | #3 @ 16" | #3 @ 16" | #3 @ 16" | #3 @ 16" | #3 @ 16" | #3 @ 16" |
| | TYPE | T1 | T1 | T1 | T1 | T1 | | T1 | T1 | T1 | T1 | T1 | T1 |
| LEVEL FOUR | SIZE | 16"x16" | 16"x16" | 16"x16" | 16"x16" | 16"x16" | | 16"x16" | 16"x16" | 16"x16" | 16"x16" | 16"x16" | 16"x16" |
| | REINF | 4 #8 | 4 #8 | 4 #8 | 4 #8 | 4 #8 | | 4 #8 | 4 #8 | 4 #8 | 4 #8 | 4 #8 | 4 #8 |
| | TIES | #3 @ 16" | #3 @ 16" | #3 @ 16" | #3 @ 16" | #3 @ 16" | | #3 @ 16" | #3 @ 16" | #3 @ 16" | #3 @ 16" | #3 @ 16" | #3 @ 16" |
| | TYPE | T1 | T1 | T1 | T1 | T1 | | T1 | T1 | T1 | T1 | T1 | T1 |
| LEVEL THREE | SIZE | 16"x16" | 16"x16" | 16"x16" | 16"x16" | 16"x16" | | 16"x16" | 16"x16" | 16"x16" | 16"x16" | 16"x16" | 16"x16" |
| | REINF | 4 #8 | 4 #8 | 4 #8 | 4 #8 | 4 #8 | | 4 #8 | 4 #8 | 4 #8 | 4 #8 | 4 #8 | 4 #8 |
| | TIES | #3 @ 16" | #3 @ 16" | #3 @ 16" | #3 @ 16" | #3 @ 16" | | #3 @ 16" | #3 @ 16" | #3 @ 16" | #3 @ 16" | #3 @ 16" | #3 @ 16" |
| | TYPE | T1 | T1 | T1 | T1 | T1 | | T1 | T1 | T1 | T1 | T1 | T1 |
| LEVEL TWO | SIZE | 16"x16" | 16"x16" | 16"x16" | 16"x16" | 16"x16" | 16"x16" | 16"x16" | 16"x16" | 16"x16" | 16"x16" | 16"x16" | 16"x16" |
| | REINF | 4 #8 | 4 #8 | 4 #8 | 4 #8 | 4 #8 | 4 #8 | 4 #8 | 4 #8 | 4 #8 | 4 #8 | 4 #8 | 4 #8 |
| | TIES | #3 @ 16" | #3 @ 16" | #3 @ 16" | #3 @ 16" | #3 @ 16" | #3 @ 16" | #3 @ 16" | #3 @ 16" | #3 @ 16" | #3 @ 16" | #3 @ 16" | #3 @ 16" |
| | TYPE | T1 | T1 | T1 | T1 | T1 | T1 | T1 | T1 | T1 | T1 | T1 | T1 |
| LEVEL ONE | SIZE | 24"x24" | 24"x24" | 24"x24" | 24"x24" | 24"x24" | | 24"x24" | 24"x24" | 24"x24" | 24"x24" | 24"x24" | 24"x24" |
| | REINF | 12 #8 | 12 #8 | 12 #8 | 12 #8 | 12 #10 | | 12 #10 | 12 #8 | 12 #8 | 12 #8 | 12 #8 | 12 #8 |
| | TIES | #3 @ 16" | #3 @ 16" | #3 @ 16" | #3 @ 16" | #3 @ 18" | | #3 @ 18" | #3 @ 16" | #3 @ 16" | #3 @ 16" | #3 @ 16" | #3 @ 16" |
| | TYPE | T3 | T3 | T3 | T3 | T3 | | T3 | T3 | T3 | T3 | T3 | T3 |
| GARAGE LEVEL | SIZE | 24"x24" | 24"x24" | 24"x24" | 24"x24" | 24"x24" | | 24"x24" | 24"x24" | 24"x24" | 24"x24" | 24"x24" | 24"x24" |
| | REINF | 12 #8 | 12 #8 | 12 #8 | 12 #8 | 12 #10 | | 12 #10 | 12 #8 | 12 #8 | 12 #8 | 12 #8 | 12 #8 |
| | TIES | #3 @ 10" | #3 @ 10" | #3 @ 10" | #3 @ 10" | #3 @ 10" | | #3 @ 10" | #3 @ 10" | #3 @ 10" | #3 @ 10" | #3 @ 10" | #3 @ 10" |
| | TYPE | T3 | T3 | T3 | T3 | T3 | | T3 | T3 | T3 | T3 | T3 | T3 |
| DOWELS | | 12 #8 | 12 #8 | 12 #8 | 12 #8 | 12 #10 | 4 #8 | 12 #10 | 12 #8 | 12 #8 | 12 #8 | 12 #8 | 12 #8 |
| REMARKS | | – | – | – | – | – | – | – | – | – | – | – | – |
| FOUNDATION SERVICE LOAD (k) | | 581 | 635 | 635 | 623 | 895 | – | 946 | 599 | 581 | 581 | 599 | 572 |

| LEVEL / COLUMN MARK | | U-19 | B-20 | D-20 | E-20 | F-20 | G-20 | H.4-20 | J-20 | K-20 | L-20 | M-20 | N-20 | P-20 | Q-20 | R-20 | S-20 | U-20 | B-21 | D-21 | E-21 | F-21 | G-21 |
|---|---|---|---|---|---|---|---|---|---|---|---|---|---|---|---|---|---|---|---|---|---|---|---|
| PH ROOF | | | | | | | | | | | | | | | | | | | | | | | |
| ROOF/ PH FL | SIZE | | | | | | | | | | | | | | | | | | | | | | |
| | REINF | | | | | | | | | | | | | | | | | | | | | | |
| | TIES | | | | | | | | | | | | | | | | | | | | | | |
| | TYPE | | | | | | | | | | | | | | | | | | | | | | |
| LEVEL EIGHT | SIZE | | | | | | | | | | | | | | | | | | | | | | |
| | REINF | | | | | | | | | | | | | | | | | | | | | | |
| | TIES | | | | | | | | | | | | | | | | | | | | | | |
| | TYPE | | | | | | | | | | | | | | | | | | | | | | |
| LEVEL SEVEN | SIZE | | | | | | | | | | | | | | | | | | | | | | |
| | REINF | | | | | | | | | | | | | | | | | | | | | | |
| | TIES | | | | | | | | | | | | | | | | | | | | | | |
| | TYPE | | | | | | | | | | | | | | | | | | | | | | |
| LEVEL SIX | SIZE | | | | | | | | | | | | | | | | | | | | | | |
| | REINF | | | | | | | | | | | | | | | | | | | | | | |
| | TIES | | | | | | | | | | | | | | | | | | | | | | |
| | TYPE | | | | | | | | | | | | | | | | | | | | | | |
| LEVEL FIVE | SIZE | | | | | | | | | | | | | | | | | | | | | | |
| | REINF | | | | | | | | | | | | | | | | | | | | | | |
| | TIES | | | | | | | | | | | | | | | | | | | | | | |
| | TYPE | | | | | | | | | | | | | | | | | | | | | | |
| LEVEL FOUR | SIZE | | | | | | | | | | | | | | | | | | | | | | |
| | REINF | | | | | | | | | | | | | | | | | | | | | | |
| | TIES | | | | | | | | | | | | | | | | | | | | | | |
| | TYPE | | | | | | | | | | | | | | | | | | | | | | |
| LEVEL THREE | SIZE | | | | | | | | | | | | | | | | | | | | | | |
| | REINF | | | | | | | | | | | | | | | | | | | | | | |
| | TIES | | | | | | | | | | | | | | | | | | | | | | |
| | TYPE | | | | | | | | | | | | | | | | | | | | | | |
| LEVEL TWO | SIZE | | | | | | | | 20"x20"* | 24"x24" | 24"x24" | 24"x20"* | 16"x16" | | | | | | | | | | |
| | REINF | | | | | | | | 4 #8 | 4 #8 | 4 #8 | 8 #8 | 4 #8 | | | | | | | | | | |
| | TIES | | | | | | | | #3 @ 16" | #3 @ 16" | #3 @ 16" | #3 @ 16" | #3 @ 16" | | | | | | | | | | |
| | TYPE | | | | | | | | T1 | T1 | T1 | T1 | T1 | | | | | | | | | | |
| LEVEL ONE | SIZE | 24"x24" | 24"x24" | 24"x24" | 24"x24" | 24"x24" | 24"x24" | 24"x24" | 24"x24" | 24"x24" | 24"x24" | 24"x24" | 24"x24" | 24"x24" | 24"x24" | 24"x24" | 24"x24" | 24"x24" | 24"x24" | 24"x24" | 24"x24" | 24"x24" | 24"x24" |
| | REINF | 8 #8 | 8 #8 | 8 #8 | 8 #8 | 8 #8 | 8 #8 | 8 #8 | 8 #8 | 8 #8 | 8 #8 | 8 #8 | 8 #8 | 8 #8 | 8 #8 | 8 #8 | 8 #8 | 8 #8 | 8 #8 | 8 #8 | 8 #8 | 8 #8 | 8 #8 |
| | TIES | #3 @ 16" | #3 @ 16" | #3 @ 16" | #3 @ 16" | #3 @ 16" | #3 @ 16" | #3 @ 16" | #3 @ 16" | #3 @ 16" | #3 @ 16" | #3 @ 16" | #3 @ 16" | #3 @ 16" | #3 @ 16" | #3 @ 16" | #3 @ 16" | #3 @ 16" | #3 @ 16" | #3 @ 16" | #3 @ 16" | #3 @ 16" | #3 @ 16" |
| | TYPE | T2 | T2 | T2 | T2 | T2 | T2 | T2 | T2 | T2 | T2 | T2 | T2 | T2 | T2 | T2 | T2 | T2 | T2 | T2 | T2 | T2 | T2 |
| GARAGE LEVEL | SIZE | 24"x24" | 24"x24" | 24"x24" | 24"x24" | 24"x24" | 24"x24" | 24"x24" | 24"x24" | 24"x24" | 24"x24" | 24"x24" | 24"x24" | 24"x24" | 24"x24" | 24"x24" | 24"x24" | 24"x24" | 24"x24" | 24"x24" | 24"x24" | 24"x24" | 24"x24" |
| | REINF | 8 #8 | 8 #8 | 8 #8 | 8 #8 | 8 #8 | 8 #8 | 8 #8 | 8 #8 | 8 #8 | 8 #8 | 8 #8 | 8 #8 | 8 #8 | 8 #8 | 8 #8 | 8 #8 | 8 #8 | 8 #8 | 8 #8 | 8 #8 | 8 #8 | 8 #8 |
| | TIES | #3 @ 10" | #3 @ 10" | #3 @ 10" | #3 @ 10" | #3 @ 10" | #3 @ 10" | #3 @ 10" | #3 @ 10" | #3 @ 10" | #3 @ 10" | #3 @ 10" | #3 @ 10" | #3 @ 10" | #3 @ 10" | #3 @ 10" | #3 @ 10" | #3 @ 10" | #3 @ 10" | #3 @ 10" | #3 @ 10" | #3 @ 10" | #3 @ 10" |
| | TYPE | T2 | T2 | T2 | T2 | T2 | T2 | T2 | T2 | T2 | T2 | T2 | T2 | T2 | T2 | T2 | T2 | T2 | T2 | T2 | T2 | T2 | T2 |
| DOWELS | | 8 #8 | 8 #8 | 8 #8 | 8 #8 | 8 #8 | 8 #8 | 8 #8 | 8 #8 | 8 #9 | 8 #9 | 8 #9 | 8 #9 | 8 #9 | 8 #8 | 8 #8 | 8 #8 | 8 #8 | 8 #8 | 8 #8 | 8 #8 | 8 #8 | 8 #8 |
| REMARKS | | – | – | – | – | – | – | – | – | – | – | – | – | – | – | – | – | – | – | – | – | – | – |
| FOUNDATION SERVICE LOAD (k) | | 239 | 233 | 331 | 284 | 284 | 447 | 447 | 454 | 480 | 466 | 475 | 372 | 284 | 284 | 309 | 361 | 303 | 233 | 331 | 281 | 281 | 281 |

## COLUMN SCHEDULE

| LEVEL / COLUMN MARK | | H-21 | J-21 | K-21 | L-21 | M-21 | N-21 | P-21 | Q-21 | R-21 | S-21 | U-21 | B-22 | D-22 | E-22 | F-22 | G-22 | H-22 | J-22 | K-22 | L-22 | M-22 | N-22 | P-22 | Q-22 | R-22 | S-22 | U-22 |
|---|---|---|---|---|---|---|---|---|---|---|---|---|---|---|---|---|---|---|---|---|---|---|---|---|---|---|---|---|
| PH ROOF | | | | | | | | | | | | | | | | | | | | | | | | | | | | |
| ROOF/ PH FL | SIZE | | | | | | | | | | | | | | | | | | | | | | | | | | | |
| | REINF | | | | | | | | | | | | | | | | | | | | | | | | | | | |
| | TIES | | | | | | | | | | | | | | | | | | | | | | | | | | | |
| | TYPE | | | | | | | | | | | | | | | | | | | | | | | | | | | |
| LEVEL EIGHT | SIZE | | | | | | | | | | | | | | | | | | | | | | | | | | | |
| | REINF | | | | | | | | | | | | | | | | | | | | | | | | | | | |
| | TIES | | | | | | | | | | | | | | | | | | | | | | | | | | | |
| | TYPE | | | | | | | | | | | | | | | | | | | | | | | | | | | |
| LEVEL SEVEN | SIZE | | | | | | | | | | | | | | | | | | | | | | | | | | | |
| | REINF | | | | | | | | | | | | | | | | | | | | | | | | | | | |
| | TIES | | | | | | | | | | | | | | | | | | | | | | | | | | | |
| | TYPE | | | | | | | | | | | | | | | | | | | | | | | | | | | |
| LEVEL SIX | SIZE | | | | | | | | | | | | | | | | | | | | | | | | | | | |
| | REINF | | | | | | | | | | | | | | | | | | | | | | | | | | | |
| | TIES | | | | | | | | | | | | | | | | | | | | | | | | | | | |
| | TYPE | | | | | | | | | | | | | | | | | | | | | | | | | | | |
| LEVEL FIVE | SIZE | | | | | | | | | | | | | | | | | | | | | | | | | | | |
| | REINF | | | | | | | | | | | | | | | | | | | | | | | | | | | |
| | TIES | | | | | | | | | | | | | | | | | | | | | | | | | | | |
| | TYPE | | | | | | | | | | | | | | | | | | | | | | | | | | | |
| LEVEL FOUR | SIZE | | | | | | | | | | | | | | | | | | | | | | | | | | | |
| | REINF | | | | | | | | | | | | | | | | | | | | | | | | | | | |
| | TIES | | | | | | | | | | | | | | | | | | | | | | | | | | | |
| | TYPE | | | | | | | | | | | | | | | | | | | | | | | | | | | |
| LEVEL THREE | SIZE | | | | | | | | | | | | | | | | | | | | | | | | | | | |
| | REINF | | | | | | | | | | | | | | | | | | | | | | | | | | | |
| | TIES | | | | | | | | | | | | | | | | | | | | | | | | | | | |
| | TYPE | | | | | | | | | | | | | | | | | | | | | | | | | | | |
| LEVEL TWO | SIZE | | 16"x16" | 24"x24" | 24"x24" | 24"x24" | 16"x16" | | | | | | | | | | | | 16"x16" | 24"x24" | 24"x24" | 24"x24" | 16"x16" | | | | | |
| | REINF | | 4 #8 | 4 #8 | 4 #8 | 4 #8 | 4 #8 | | | | | | | | | | | | 8 #8 | 4 #8 | 4 #8 | 4 #8 | 4 #8 | | | | | |
| | TIES | | #3 @ 16" | #3 @ 16" | #3 @ 16" | #3 @ 16" | #3 @ 16" | | | | | | | | | | | | #3 @ 16" | #3 @ 16" | #3 @ 16" | #3 @ 16" | #3 @ 16" | | | | | |
| | TYPE | | T1 | T1 | T1 | T1 | T1 | | | | | | | | | | | | T1 | T1 | T1 | T1 | T1 | | | | | |
| LEVEL ONE | SIZE | 24"x24" | 24"x24" | 24"x24" | 24"x24" | 24"x24" | 24"x24" | 24"x24" | 24"x24" | 24"x24" | 24"x24" | 24"x24" | 24"x24" | 24"x24" | 24"x24" | 24"x24" | 24"x24" | 24"x24" | 24"x24" | 24"x24" | 24"x24" | 24"x24" | 24"x24" | 24"x24" | 24"x24" | 24"x24" | 24"x24" | 24"x24" |
| | REINF | 8 #8 | 8 #9 | 8 #9 | 8 #9 | 8 #9 | 8 #9 | 8 #8 | 8 #8 | 8 #8 | 8 #8 | 8 #8 | 8 #8 | 8 #8 | 8 #8 | 8 #8 | 8 #8 | 8 #8 | 8 #8 | 8 #8 | 8 #8 | 8 #8 | 8 #8 | 8 #8 | 8 #8 | 8 #8 | 8 #8 | 8 #8 |
| | TIES | #3 @ 16" | #3 @ 18" | #3 @ 18" | #3 @ 18" | #3 @ 18" | #3 @ 18" | #3 @ 16" | #3 @ 16" | #3 @ 16" | #3 @ 16" | #3 @ 16" | #3 @ 16" | #3 @ 16" | #3 @ 16" | #3 @ 16" | #3 @ 16" | #3 @ 16" | #3 @ 16" | #3 @ 16" | #3 @ 16" | #3 @ 16" | #3 @ 16" | #3 @ 16" | #3 @ 16" | #3 @ 16" | #3 @ 16" | #3 @ 16" | #3 @ 16" |
| | TYPE | T2 | T2 | T2 | T2 | T2 | T2 | T2 | T2 | T2 | T2 | T2 | T2 | T2 | T2 | T2 | T2 | T2 | T2 | T2 | T2 | T2 | T2 | T2 | T2 | T2 | T2 | T2 |
| GARAGE LEVEL | SIZE | 24"x24" | 24"x24" | 24"x24" | 24"x24" | 24"x24" | 24"x24" | 24"x24" | 24"x24" | 24"x24" | 24"x24" | 24"x24" | 24"x24" | 24"x24" | 24"x24" | 24"x24" | 24"x24" | 24"x24" | 24"x24" | 24"x24" | 24"x24" | 24"x24" | 24"x24" | 24"x24" | 24"x24" | 24"x24" | 24"x24" | 24"x24" |
| | REINF | 8 #8 | 8 #9 | 8 #9 | 8 #9 | 8 #9 | 8 #9 | 8 #8 | 8 #8 | 8 #8 | 8 #8 | 8 #8 | 8 #8 | 8 #8 | 8 #8 | 8 #8 | 8 #8 | 8 #8 | 8 #8 | 8 #8 | 8 #8 | 8 #8 | 8 #8 | 8 #8 | 8 #8 | 8 #8 | 8 #8 | 8 #8 |
| | TIES | #3 @ 10" | #3 @ 10" | #3 @ 10" | #3 @ 10" | #3 @ 10" | #3 @ 10" | #3 @ 10" | #3 @ 10" | #3 @ 10" | #3 @ 10" | #3 @ 10" | #3 @ 10" | #3 @ 10" | #3 @ 10" | #3 @ 10" | #3 @ 10" | #3 @ 10" | #3 @ 10" | #3 @ 10" | #3 @ 10" | #3 @ 10" | #3 @ 10" | #3 @ 10" | #3 @ 10" | #3 @ 10" | #3 @ 10" | #3 @ 10" |
| | TYPE | T2 | T2 | T2 | T2 | T2 | T2 | T2 | T2 | T2 | T2 | T2 | T2 | T2 | T2 | T2 | T2 | T2 | T2 | T2 | T2 | T2 | T2 | T2 | T2 | T2 | T2 | T2 |
| DOWELS | | 8 #8 | 8 #9 | 8 #9 | 8 #9 | 8 #9 | 8 #9 | 8 #8 | 8 #8 | 8 #8 | 8 #8 | 8 #8 | 8 #8 | 8 #8 | 8 #8 | 8 #8 | 8 #8 | 8 #8 | 8 #8 | 8 #8 | 8 #8 | 8 #8 | 8 #8 | 8 #8 | 8 #8 | 8 #8 | 8 #8 | 8 #8 |
| REMARKS | | – | – | – | – | – | – | – | – | – | – | – | – | – | – | – | – | – | – | – | – | – | – | – | – | – | – | – |
| FOUNDATION SERVICE LOAD (k) | | 284 | 454 | 480 | 466 | 472 | 397 | 303 | 303 | 303 | 361 | 303 | 156 | 207 | 183 | 183 | 183 | 207 | 215 | 326 | 313 | 238 | 225 | 183 | 183 | 183 | 207 | 156 |

NOTES:
1. SERVICE LOADS INDICATED INCLUDE DEAD LOAD PLUS LIVE LOAD ONLY.
2. CONCRETE COMPRESSIVE STRENGTH ($f'c$) EQUALS 5000 PSI FOR ALL COLUMNS, UNO.
3. REFER TO S-501 FOR COLUMN DETAILS.
4. REFER TO S-501 FOR MINIMUM COMPRESSION DEVELOPMENT LENGTH TABLE FOR COLUMN DOWELS.
5. ~~REFER TO S-501 FOR MINIMUM COMPRESSION LAP SPLICE LENGTH TABLE FOR COLUMN VERTICAL BARS.~~
6. FIRST ENTRY IS NORTH-SOUTH COLUMN DIMENSION AND SECOND ENTRY IS EAST-WEST COLUMN DIMENSION.
7. * DENOTES COLUMN OFFSET FROM GRID LINE, SEE PLAN.

PROPERTY OF THE UNITED STATES GOVERNMENT – FOR OFFICIAL USE ONLY. Do not remove this notice. Properly destroy documents when no longer needed.

GENERAL SERVICES ADMINISTRATION
77 FORSYTH STREET
SUITE 600
ATLANTA, GA 30303
TEL: (404)331-3200

AFRH The Premier Retirement Community for America's Veterans
JACOBS PROJECT MANAGEMENT CONSULTANT TO THE GENERAL SERVICES ADMINISTRATION
YATES CONSTRUCTION
SFCS Architecture Engineering Planning Interiors
URS CORPORATION
2020 K ST, NW
SUITE 300
WASHINGTON D.C. 20006

ISSUED FOR CONSTRUCTION

CERTIFICATIONS: DISTRICT OF COLUMBIA, MARK W. ZIMPELMAN, 8572, REGISTERED PROFESSIONAL ENGINEER, 09/24/08

KEY PLAN

REVISION NOTES

| MARK | DATE | DESCRIPTION |
|---|---|---|
| | 01/15/08 | COLUMN FOUNDATION SUBMISSION |
| | 01/15/08 | ISSUED FOR CONSTRUCTION |
| 2 | 02/27/08 | ADD COLUMN REINF AND DETAILS |
| 14 | 04/23/08 | COLUMN REINF FOR UPPER LEVELS |
| 30 | 07/21/08 | REVISED POUR STRIP LOCATION |
| 2 | 09/08/08 | RE-ISSUED FOR CONSTRUCTION |
| 2 | 09/08/08 | RE-ISSUED FOR CONSTRUCTION |
| 43 | 09/24/08 | REVISION TO LEVEL 3 CONNECTOR |

DRAWING SCALE

CONTRACTORS

| | |
|---|---|
| A/E CON. NO. | GS-04P-07-EX-C-0099 |
| A/E TASK NO. | |
| CONS. CONTR. | |
| CONS. WORK | |
| PRIME A/E | |
| SUB A/E | |
| CONSTR. CON. | |

BUILDING

| | |
|---|---|
| NAME | ARMED FORCES RETIREMENT HOME |
| STREET | 1800 BEACH DRIVE |
| CITY/ST./ZIP | GULFPORT, MS 39507 |
| BUILDING NO. | |
| OTHER BUILDING NOs. | |
| FACILITY CODE | |

PROJECT

| | |
|---|---|
| PROJECT TITLE | ARMED FORCES RETIREMENT HOME GULFPORT, MISSISSIPPI |
| PROJECT DESCRIPTION | NEW CONSTRUCTION |
| PROJECT NO. | 31942982 |
| GSA PM | STEVEN SMITH |
| SUBMISSION | ISSUED FOR CONSTRUCTION |
| SUB. DATE | 09/08/2008 |

DRAWING

| | |
|---|---|
| DRAWING TITLE | COLUMN SCHEDULE |
| FILE NAME | S-606-N0095730.DWG |
| FLOOR NO. | 00 |
| DRAWN BY | JVS DATE DRAFTED: |
| CHECKED BY | MWZ SHEET SIZE: 34 X 44 |
| DRAWING NO. | S 6 06 (DISCIPLINE SHEET TYPE SEQUENCE) |
| | SHEET 000 OF 000 |

## COLUMN SCHEDULE

| LEVEL \ COLUMN MARK | | B-23 | C.2-23 | E-23 | F.2-23 | G.3-23 | H.5-23 | J.3-23 | K-23 | L.1-23 | L.8-23 | M-23 | A.9-23.4 | C.2-23.4 | E-23.4 | F.2-23.4 | C.2-24 | E-24 | F.2.-24 | G.3-24 | H.5-24 | J.3-24 | K-24 | AB-25 | A.9-25 | L.1-25.1 | AB-25.9 | AA-25.9 | D.2-26 | E-26 | F.2-26 | G.3-26 | H.5-26 | J.3-26 | K-26 |
|---|---|---|---|---|---|---|---|---|---|---|---|---|---|---|---|---|---|---|---|---|---|---|---|---|---|---|---|---|---|---|---|---|---|---|---|
| | | | | | | | | 2 | | | | | | | | | | | | | | 2 | | | | | | | | | | | | 2 | |
| LEVEL FOUR/ ROOF | SIZE | | | | | | | | | | | | | | | | | | | | | | | | | | | | | | | | | | |
| | REINF | | | | | | | | | | | | | | | | | | | | | | | | | | | | | | | | | | |
| | TIES | | | | | | | | | | 26 | | | | | | | | | | | | | | | | | | | 37 | | | | | |
| | TYPE | | | | | | | | | | | | | | | | | | | | | | | | | | | | | | | | | | |
| LEVEL THREE | SIZE | | | | 20"x20" | 20"x20" | 20"x20" | 20"x20" | 20"x20" | 20"x20" | | | 20"x20" | 20"x20" | 20"x20" | 20"x20" | 20"x20" | 20"x20" | 20"x20" | 20"x20" | 20"x20" | 20"x20" | 20"x20" | 20"x20" | 20"x20" | 20"x20" | 20"x20" | 20"x20" | 20"x20" | 20"x20" | 24"x20" | 20"x20" | 20"x20" | 20"x20" | 20"x20" |
| | REINF | | | | 8 #7 | 8 #7 | 8 #7 | 8 #7 | 8 #7 | 8 #7 | | | 8 #7 | 8 #7 | 8 #7 | 8 #7 | 8 #7 | 8 #7 | 8 #7 | 8 #7 | 8 #7 | 8 #7 | 8 #7 | 8 #7 | 8 #7 | 8 #7 | 8 #7 | 8 #7 | 8 #7 | 8 #7 | 8 #7 | 8 #7 | 8 #7 | 8 #7 | 8 #7 |
| | TIES | | | | #3 @ 14" | #3 @ 14" | #3 @ 14" | #3 @ 14" | #3 @ 14" | #3 @ 14" | | | #3 @ 14" | #3 @ 14" | #3 @ 14" | #3 @ 14" | #3 @ 14" | #3 @ 14" | #3 @ 14" | #3 @ 14" | #3 @ 14" | #3 @ 14" | #3 @ 14" | #3 @ 14" | #3 @ 14" | #3 @ 14" | #3 @ 14" | #3 @ 14" | #3 @ 14" | #3 @ 14" | #3 @ 14" | #3 @ 14" | #3 @ 14" | #3 @ 14" | #3 @ 14" | #3 @ 14" |
| | TYPE | | | | T2 | T2 | T2 | T2 | T2 | T2 | | | T2 | T2 | T2 | T2 | T2 | T2 | T2 | T2 | T2 | T2 | T2 | T2 | T2 | T2 | T2 | T2 | T2 | T2 | T2 | T2 | T2 | T2 | T2 |
| LEVEL TWO | SIZE | | | | 20"x20" | 20"x20" | 20"x20" | 20"x20" | 20"x20" | 20"x20" | 20"x20" | | 20"x20" | 20"x20" | 20"x20" | 20"x20" | 20"x20" | 20"x20" | 20"x20" | 20"x20" | 20"x20" | 20"x20" | 20"x20" | 20"x20" | 20"x20" | 20"x20" | 20"x20" | 20"x20" | 20"x20" | 20"x20" | 24"x20" | 20"x20" | 20"x20" | 20"x20" | 20"x20" |
| | REINF | | | | 8 #7 | 8 #7 | 8 #7 | 8 #7 | 8 #7 | 8 #8 | 8 #7 | | 8 #7 | 8 #7 | 8 #8 | 8 #7 | 8 #8 | 8 #8 | 8 #8 | 8 #8 | 8 #8 | 8 #8 | 8 #8 | 8 #8 | 8 #8 | 8 #7 | 8 #7 | 8 #7 | 8 #8 | 8 #8 | 8 #8 | 8 #8 | 8 #8 | 8 #7 | 8 #7 |
| | TIES | | | | #3 @ 14" | #3 @ 14" | #3 @ 14" | #3 @ 14" | #3 @ 14" | #3 @ 16" | #3 @ 14" | | #3 @ 14" | #3 @ 14" | #3 @ 16" | #3 @ 14" | #3 @ 16" | #3 @ 16" | #3 @ 16" | #3 @ 16" | #3 @ 16" | #3 @ 16" | #3 @ 16" | #3 @ 16" | #3 @ 14" | #3 @ 14" | #3 @ 16" | #3 @ 14" | #3 @ 14" | #3 @ 16" | #3 @ 16" | #3 @ 16" | #3 @ 16" | #3 @ 16" | #3 @ 14" | #3 @ 14" |
| | TYPE | | | | T2 | T2 | T2 | T2 | T2 | T2 | T2 | | T2 | T2 | T2 | T2 | T2 | T2 | T2 | T2 | T2 | T2 | T2 | T2 | T2 | T2 | T2 | T2 | T2 | T2 | T2 | T2 | T2 | T2 | T2 |
| LEVEL ONE | SIZE | 20"x20" | 20"x20" | 20"x20" | 20"x20" | 20"x20" | 20"x20" | 20"x20" | 20"x20" | 20"x20" | | 20"x20" | 20"x20" | 20"x20" | 20"x20" | 20"x20" | 20"x20" | 20"x20" | 20"x20" | 20"x20" | 20"x20" | 20"x20" | 20"x20" | 20"x20" | 20"x20" | 20"x20" | 20"x20" | 20"x20" | 20"x20" | 20"x20" | 24"x20" | 20"x20" | 20"x20" | 20"x20" | 20"x20" |
| | REINF | 8 #8 | 8 #8 | 8 #10 | 8 #8 | 8 #8 | 8 #8 | 8 #8 | 8 #8 | 8 #10 | – | 8 #8 | 8 #8 | 8 #8 | 8 #8 | 8 #8 | 8 #10 | 8 #10 | 8 #10 | 8 #10 | 8 #10 | 8 #10 | 8 #10 | 8 #7 | 8 #10 | 8 #10 | 8 #7 | 8 #8 | 8 #10 | 12 #10 | 12 #10 | 8 #10 | 8 #10 | 8 #8 | 8 #8 |
| | TIES | #3 @ 16" | #3 @ 16" | #3 @ 18" | #3 @ 16" | #3 @ 16" | #3 @ 16" | #3 @ 16" | #3 @ 16" | #3 @ 18" | | #3 @ 16" | #3 @ 16" | #3 @ 16" | #3 @ 16" | #3 @ 16" | #3 @ 18" | #3 @ 18" | #3 @ 16" | #3 @ 18" | #3 @ 18" | #3 @ 16" | #3 @ 18" | #3 @ 14" | #3 @ 18" | #3 @ 18" | #3 @ 14" | #3 @ 16" | #3 @ 16" | #3 @ 18" | #3 @ 18" | #3 @ 18" | #3 @ 18" | #3 @ 18" | #3 @ 16" | #3 @ 16" |
| | TYPE | T2 | T2 | T2 | T2 | T2 | T2 | T2 | T2 | T2 | | T2 | T2 | T2 | T2 | T2 | T2 | T2 | T2 | T2 | T2 | T2 | T2 | T2 | T2 | T2 | T2 | T2 | T2 | T3 | T3 | T2 | T2 | T2 | T2 |
| GARAGE LEVEL | SIZE | 20"x20" | 20"x20" | 20"x20" | 20"x20" | 20"x20" | 20"x20" | 20"x20" | 20"x20" | 20"x20" | | 20"x20" | 20"x20" | 20"x20" | 20"x20" | 20"x20" | 20"x20" | 20"x20" | 20"x20" | 20"x20" | 20"x20" | 20"x20" | 20"x20" | 20"x20" | 20"x20" | 24"x24" | 20"x20" | 20"x20" | 20"x20" | 20"x20" | 24"x20" | 20"x20" | 20"x20" | 20"x20" | 20"x20" |
| | REINF | 8 #8 | 8 #8 | 8 #8 | 8 #8 | 8 #8 | 8 #8 | 8 #8 | 8 #8 | 8 #8 | | 8 #8 | 8 #8 | 8 #8 | 8 #8 | 8 #8 | 8 #8 | 8 #8 | 8 #8 | 8 #8 | 8 #8 | 8 #8 | 8 #8 | 8 #8 | 8 #8 | 8 #10 | 3A 8 #7 | 8 #8 | 8 #8 | 8 #10 | 12 #10 | 8 #10 | 8 #10 | 8 #8 | 8 #8 |
| | TIES | #3 @ 8" | #3 @ 8" | #3 @ 8" | #3 @ 8" | #3 @ 8" | #3 @ 8" | #3 @ 8" | #3 @ 8" | #3 @ 8" | | #3 @ 8" | #3 @ 8" | #3 @ 8" | #3 @ 8" | #3 @ 8" | #3 @ 8" | #3 @ 8" | #3 @ 8" | #3 @ 8" | #3 @ 8" | #3 @ 8" | #3 @ 8" | #3 @ 8" | #3 @ 8" | #3 @ 8" | #3 @ 8" | #3 @ 8" | #3 @ 8" | #3 @ 8" | #3 @ 8" | #3 @ 8" | #3 @ 8" | #3 @ 8" | #3 @ 8" | #3 @ 8" |
| | TYPE | T2 | T2 | T2 | T2 | T2 | T2 | T2 | T2 | T2 | | T2 | T2 | T2 | T2 | T2 | T2 | T2 | T2 | T2 | T2 | T2 | T2 | T2 | T2 | T2 | T2 | T2 | T2 | T3 | T3 | T2 | T2 | T2 | T2 |
| DOWELS | | 8 #8 | 8 #8 | 8 #10 | 8 #8 | 8 #8 | 8 #8 | 8 #8 | 8 #8 | 8 #10 | – | 8 #8 | 8 #8 | 8 #8 | 8 #8 | 8 #8 | 8 #10 | 8 #10 | 8 #10 | 8 #10 | 8 #10 | 8 #10 | 8 #10 | 8 #10 | 8 #7 | 8 #10 | 8 #10 | 8 #7 | 8 #8 | 8 #10 | 12 #10 | 12 #10 | 8 #10 | 8 #10 | 8 #8 | 8 #8 |
| REMARKS | | – | – | – | – | – | – | – | – | – | – | – | – | – | – | – | – | – | – | – | – | – | – | – | – | – | – | – | – | – | – | – | – | – | – | – |
| FOUNDATION SERVICE LOAD (k) | | 59 | 125 | 125 | 143 | 227 | 208 | 171 | 208 | 339 | – | 115 | 153 | 246 | 246 | 222 | 488 | 450 | 395 | 450 | 413 | 339 | 464 | 129 | 464 | 464 | 115 | 367 | 441 | 557 | 604 | 450 | 413 | 339 | 339 |

2 2

## COLUMN SCHEDULE

| LEVEL \ COLUMN MARK | | K-26.6 | L.1-26.6 | L.9-26.6 | M-26.6 | AB-26.9 | F.9-27 | H.2-27 | J.5-27 | AB-28 | D.2-28 | E-28 | F.2-28 | F.9-28 | K-29 | L.1-29 | L.9-29 | H.2-30 | J.5-30 | K-31 | L.1-31 | L.9-31 | H.9-32 | J.5-32 | H.9-33 | K-33 | L.1-33 | L.4-33 | L.9-33 | H.9-34 | K-34 | L.1-34 | L.4-34 | H.9-35 | K-35 |
|---|---|---|---|---|---|---|---|---|---|---|---|---|---|---|---|---|---|---|---|---|---|---|---|---|---|---|---|---|---|---|---|---|---|---|---|
| | | | | | | | | | 14 | | 37 53 | | | | | | 37 | | | | | | | 37 | | | | | 37 | | | | | | |
| LEVEL FOUR/ ROOF | SIZE | | | | | | | | | | | | | | | | | | | | | | | | | | | | | | | | | | |
| | REINF | | | | | | | | | | | | | | | | | | | | | | | | | | | | | | | | | | |
| | TIES | | | | | | | | | | | | | | | | | | | | | | | | | | | | | | | | | | |
| | TYPE | | | | | | | | | | | | | | | | | | | | | | | | | | | | | | | | | | |
| LEVEL THREE | SIZE | 20"x20" | 20"x20" | 20"x20" | 20"x20" | 20"x20" | 20"x20" | 20"x20" | 20"x20" | | 20"x20" | 20"x20" | 24"x20" | 20"x20" | 20"x20" | 20"x20" | 20"x20" | 24"x20"* | 20"x20" | 20"x20" | 20"x20" | 20"x20" | 20"x20" | 20"x20" | 20"x24" | 20"x24" | 20"x20" | 20"x20" | 20"x20" | 20"x24" | 20"x20" | 20"x20" | 20"x20" | 20"x20" |
| | REINF | 8 #7 | 8 #7 | 8 #7 | 8 #7 | 8 #7 | 8 #7 | 8 #7 | 8 #7 | | 8 #7 | 8 #7 | 8 #7 | 8 #7 | 8 #7 | 8 #7 | 8 #7 | 8 #7 | 8 #7 | 8 #7 | 8 #7 | 8 #7 | 8 #7 | 8 #7 | 8 #7 | 8 #7 | 8 #7 | 8 #7 | 8 #7 | 8 #7 | 8 #7 | 8 #7 | 8 #7 | 8 #7 | 8 #7 |
| | TIES | #3 @ 14" | #3 @ 14" | #3 @ 14" | #3 @ 14" | #3 @ 14" | #3 @ 14" | #3 @ 14" | #3 @ 14" | | #3 @ 14" | #3 @ 14" | #3 @ 14" | #3 @ 14" | #3 @ 14" | #3 @ 14" | #3 @ 14" | #3 @ 14" | #3 @ 14" | #3 @ 14" | #3 @ 14" | #3 @ 14" | #3 @ 14" | #3 @ 14" | #3 @ 14" | #3 @ 14" | #3 @ 14" | #3 @ 14" | #3 @ 14" | #3 @ 14" | #3 @ 14" | #3 @ 14" | #3 @ 14" | #3 @ 14" | #3 @ 14" | #3 @ 14" |
| | TYPE | T2 | T2 | T2 | T2 | T2 | T2 | T2 | T2 | | T2 | T2 | T2 | T2 | T2 | T2 | T2 | T2 | T2 | T2 | T2 | T2 | T2 | T2 | T2 | T2 | T2 | T2 | T2 | T2 | T2 | T2 | T2 | T2 | T2 |
| LEVEL TWO | SIZE | 20"x20" | 20"x20" | 20"x20" | 20"x20" | 20"x20" | 20"x20" | 20"x20" | 20"x20" | | 20"x20" | 20"x20" | 24"x20" | 20"x20" | 20"x20" | 20"x20" | 20"x20" | 24"x20"* | 20"x20" | 20"x20" | 20"x20" | 20"x20" | 20"x20" | 20"x20" | 20"x24" | 20"x24" | 20"x20" | 20"x20" | 20"x20" | 20"x24" | 20"x20" | 20"x20" | 20"x20" | 20"x20" |
| | REINF | 8 #7 | 8 #8 | 8 #7 | 8 #7 | 8 #8 | 8 #7 | 8 #8 | 8 #8 | | 8 #7 | 8 #7 | 8 #7 | 8 #8 | 8 #8 | 8 #8 | 8 #7 | 8 #8 | 8 #8 | 8 #8 | 8 #8 | 8 #7 | 8 #7 | 8 #7 | 8 #7 | 8 #8 | 8 #8 | 8 #7 | 8 #7 | 8 #7 | 8 #8 | 8 #8 | 8 #8 | 8 #7 | 8 #8 |
| | TIES | #3 @ 14" | #3 @ 16" | #3 @ 14" | #3 @ 14" | #3 @ 14" | #3 @ 14" | #3 @ 16" | #3 @ 16" | | #3 @ 14" | #3 @ 14" | #3 @ 14" | #3 @ 14" | #3 @ 16" | #3 @ 16" | #3 @ 14" | #3 @ 14" | #3 @ 16" | #3 @ 16" | #3 @ 16" | #3 @ 14" | #3 @ 14" | #3 @ 14" | #3 @ 14" | #3 @ 16" | #3 @ 16" | #3 @ 16" | #3 @ 14" | #3 @ 14" | #3 @ 16" | #3 @ 16" | #3 @ 16" | #3 @ 16" | #3 @ 14" | #3 @ 16" |
| | TYPE | T2 | T2 | T2 | T2 | T2 | T2 | T2 | T2 | | T2 | T2 | T2 | T2 | T2 | T2 | T2 | T2 | T2 | T2 | T2 | T2 | T2 | T2 | T2 | T2 | T2 | T2 | T2 | T2 | T2 | T2 | T2 | T2 | T2 |
| LEVEL ONE | SIZE | 20"x20" | 20"x20" | 20"x20" | 20"x20" | 20"x20" | 20"x20" | 20"x20" | 20"x20" | 20"x20" | 20"x20" | 20"x20" | 24"x20" | 20"x20" | 20"x20" | 20"x20" | 20"x20" | 24"x20"* | 20"x20" | 20"x20" | 20"x20" | 20"x20" | 20"x20" | 20"x20" | 20"x24" | 20"x24" | 20"x20" | 20"x20" | 20"x20" | 20"x24" | 20"x20" | 20"x20" | 20"x20" | 20"x20" |
| | REINF | 8 #8 | 12 #10 | 8 #8 | 8 #8 | 8 #7 | 8 #8 | 8 #10 | 8 #10 | 8 #7 | 8 #8 | 8 #8 | 8 #8 | 8 #8 | 12 #10 | 12 #10 | 8 #8 | 8 #8 | 8 #10 | 12 #10 | 12 #10 | 8 #8 | 8 #8 | 8 #8 | 8 #8 | 12 #10 | 8 #10 | 8 #8 | 8 #8 | 8 #8 | 12 #10 | 12 #10 | 8 #10 | 8 #8 | 12 #10 |
| | TIES | #3 @ 16" | #3 @ 18" | #3 @ 16" | #3 @ 16" | #3 @ 14" | #3 @ 16" | #3 @ 18" | #3 @ 16" | #3 @ 14" | #3 @ 16" | #3 @ 16" | #3 @ 16" | #3 @ 16" | #3 @ 18" | #3 @ 18" | #3 @ 16" | #3 @ 16" | #3 @ 16" | #3 @ 18" | #3 @ 18" | #3 @ 16" | #3 @ 16" | #3 @ 16" | #3 @ 16" | #3 @ 18" | #3 @ 18" | #3 @ 16" | #3 @ 16" | #3 @ 16" | #3 @ 18" | #3 @ 18" | #3 @ 18" | #3 @ 16" | #3 @ 16" | #3 @ 18" |
| | TYPE | T2 | T3 | T2 | T2 | T2 | T2 | T2 | T2 | T2 | T2 | T2 | T2 | T2 | T3 | T3 | T2 | T2 | T2 | T3 | T3 | T2 | T2 | T2 | T2 | T3 | T2 | T2 | T2 | T2 | T3 | T3 | T2 | T2 | T3 |
| GARAGE LEVEL | SIZE | 20"x20" | 20"x20" | 20"x20" | 20"x20" | 20"x20" | 20"x20" | 20"x20" | 20"x20" | 20"x20" | 20"x20" | 20"x20" | 24"x20" | 20"x20" | 20"x20" | 20"x20" | 20"x20" | 24"x20"* | 20"x20" | 20"x20" | 20"x20" | 20"x20" | 20"x20" | 20"x20" | 20"x24" | 20"x24" | 20"x20" | 20"x20" | 20"x20" | 20"x24" | 20"x20" | 20"x20" | 20"x20" | 20"x20" |
| | REINF | 8 #8 | 12 #10 | 8 #8 | 8 #8 | 8 #7 | 8 #8 | 8 #10 | 8 #10 | 8 #7 | 8 #8 | 8 #8 | 8 #8 | 8 #8 | 12 #10 | 12 #10 | 8 #8 | 8 #8 | 8 #10 | 12 #10 | 12 #10 | 8 #8 | 8 #8 | 8 #8 | 8 #8 | 12 #10 | 8 #10 | 8 #8 | 8 #8 | 8 #8 | 12 #10 | 12 #10 | 8 #10 | 8 #8 | 12 #10 |
| | TIES | #3 @ 8" | #3 @ 8" | #3 @ 8" | #3 @ 8" | #3 @ 8" | #3 @ 8" | #3 @ 8" | #3 @ 8" | #3 @ 8" | #3 @ 8" | #3 @ 8" | #3 @ 8" | #3 @ 8" | #3 @ 8" | #3 @ 8" | #3 @ 8" | #3 @ 8" | #3 @ 8" | #3 @ 8" | #3 @ 8" | #3 @ 8" | #3 @ 8" | #3 @ 8" | #3 @ 8" | #3 @ 8" | #3 @ 8" | #3 @ 8" | #3 @ 8" | #3 @ 8" | #3 @ 8" | #3 @ 8" | #3 @ 8" | #3 @ 8" | #3 @ 8" | #3 @ 8" |
| | TYPE | T2 | T3 | T2 | T2 | T2 | T2 | T2 | T2 | T2 | T2 | T2 | T2 | T2 | T3 | T3 | T2 | T2 | T2 | T3 | T3 | T2 | T2 | T2 | T2 | T3 | T2 | T2 | T2 | T2 | T3 | T3 | T2 | T2 | T3 |
| DOWELS | | 8 #8 | 12 #10 | 8 #8 | 8 #8 | 8 #7 | 8 #8 | 8 #10 | 8 #10 | 8 #7 | 8 #8 | 8 #8 | 8 #8 | 8 #8 | 12 #10 | 12 #10 | 8 #8 | 8 #8 | 8 #10 | 12 #10 | 12 #10 | 8 #8 | 8 #8 | 8 #8 | 8 #8 | 12 #10 | 8 #10 | 8 #8 | 8 #8 | 8 #8 | 12 #10 | 12 #10 | 8 #10 | 8 #8 | 12 #10 |
| REMARKS | | – | – | – | – | – | – | – | – | – | – | – | – | – | – | – | – | – | – | – | – | – | – | – | – | – | – | – | – | – | – | – | – | – | – | – |
| FOUNDATION SERVICE LOAD (k) | | 339 | 534 | 343 | 157 | 208 | 311 | 461 | 395 | 151 | 314 | 357 | 376 | 160 | 525 | 557 | 356 | 286 | 461 | 506 | 480 | 345 | 157 | 322 | 377 | 609 | 464 | 297 | 157 | 377 | 544 | 473 | 265 | 309 | 450 |

14 2

## COLUMN SCHEDULE

| LEVEL \ COLUMN MARK | | L.1-36 | L.4-36 | K.8-37 | L.4-37 | K.1-38 | J.6-39 | K.1-39 | K.8-39 |
|---|---|---|---|---|---|---|---|---|---|
| | | | 2 | | | | | | |
| LEVEL FOUR / ROOF | SIZE | | | | | | | | |
| | REINF | | | | | | | | |
| | TIES | | | | | | | | |
| | TYPE | | | | | | | | |
| LEVEL THREE | SIZE | 20"x20" | 20"x20" | 20"x20" | 20"x20" | 20"x20" | 20"x20" | 20"x20" | 20"x20" |
| | REINF | 8 #7 | 8 #7 | 8 #7 | 8 #7 | 8 #7 | 8 #7 | 8 #7 | 8 #7 |
| | TIES | #3 @ 14" | #3 @ 14" | #3 @ 14" | #3 @ 14" | #3 @ 14" | #3 @ 14" | #3 @ 14" | #3 @ 14" |
| | TYPE | T2 | T2 | T2 | T2 | T2 | T2 | T2 | T2 |
| LEVEL TWO | SIZE | 20"x20" | 20"x20" | 20"x20" | 20"x20" | 20"x20" | 20"x20" | 20"x20" | 20"x20" |
| | REINF | 8 #8 | 8 #7 | 8 #8 | 8 #7 | 8 #7 | 8 #7 | 8 #7 | 8 #7 |
| | TIES | #3 @ 16" | #3 @ 14" | #3 @ 16" | #3 @ 14" | #3 @ 14" | #3 @ 14" | #3 @ 14" | #3 @ 14" |
| | TYPE | T2 | T2 | T2 | T2 | T2 | T2 | T2 | T2 |
| LEVEL ONE | SIZE | 20"x20" | 20"x20" | 20"x20" | 20"x20" | 20"x20" | 20"x20" | 20"x20" | 20"x20" |
| | REINF | 12 #10 | 8 #8 | 8 #10 | 8 #8 | 8 #8 | 8 #8 | 8 #8 | 8 #8 |
| | TIES | #3 @ 18" | #3 @ 16" | #3 @ 18" | #3 @ 16" | #3 @ 16" | #3 @ 16" | #3 @ 16" | #3 @ 16" |
| | TYPE | T3 | T2 | T2 | T2 | T2 | T2 | T2 | T2 |
| GARAGE LEVEL | SIZE | 20"x20" | 20"x20" | 20"x20" | 20"x20" | 20"x20" | 20"x20" | 20"x20" | 20"x20" |
| | REINF | 12 #10 | 8 #8 | 8 #10 | 8 #8 | 8 #8 | 8 #8 | 8 #8 | 8 #8 |
| | TIES | #3 @ 8" | #3 @ 8" | #3 @ 8" | #3 @ 8" | #3 @ 8" | #3 @ 8" | #3 @ 8" | #3 @ 8" |
| | TYPE | T3 | T2 | T2 | T2 | T2 | T2 | T2 | T2 |
| DOWELS | | 12 #10 | 8 #8 | 8 #10 | 8 #8 | 8 #8 | 8 #8 | 8 #8 | 8 #8 |
| REMARKS | | – | – | – | – | – | – | – | – |
| FOUNDATION SERVICE LOAD (k) | | 441 | 230 | 450 | 160 | 348 | 219 | 245 | 219 |

14 2

NOTES:
1. SERVICE LOADS INDICATED INCLUDE DEAD LOAD PLUS LIVE LOAD ONLY.
2. CONCRETE COMPRESSIVE STRENGTH (f'c) EQUALS 5000 PSI FOR ALL COLUMNS, UNO.
3. REFER TO S-501 FOR COLUMN DETAILS.
4. REFER TO S-501 FOR MINIMUM COMPRESSION DEVELOPMENT LENGTH TABLE FOR COLUMN DOWELS.
5. REFER TO S-501 FOR MINIMUM COMPRESSION LAP SPLICE LENGTH TABLE FOR COLUMN VERTICAL BARS.
6. FIRST ENTRY IS NORTH-SOUTH COLUMN DIMENSION AND SECOND ENTRY IS EAST-WEST COLUMN DIMENSION. (2)
7. * DENOTES COLUMN OFFSET FROM GRID LINE, SEE PLAN. (37)

PROPERTY OF THE UNITED STATES GOVERNMENT – FOR OFFICIAL USE ONLY. Do not remove this notice. Properly destroy documents when no longer needed.

GSA
GENERAL SERVICES ADMINISTRATION
77 FORSYTH STREET
SUITE 600
ATLANTA, GA 30303
TEL: (404)331-3200

AFRH The Premier Retirement Community for America's Veterans
JACOBS
PROJECT MANAGEMENT CONSULTANT TO THE GENERAL SERVICES ADMINISTRATION

YATES CONSTRUCTION

SFCS Architecture Engineering Planning Interiors

URS
URS CORPORATION
2020 K ST, NW
SUITE 300
WASHINGTON D.C. 20006

ISSUED FOR CONSTRUCTION

CERTIFICATIONS

DISTRICT OF COLUMBIA
MARK W. ZIMPREMAN
8572
REGISTERED
PROFESSIONAL ENGINEER
10/31/08

KEY PLAN

REVISION NOTES

| MARK | DATE | DESCRIPTION |
|---|---|---|
| | 01/15/08 | COLUMN FOUNDATION SUBMISSION |
| | 01/15/08 | ISSUED FOR CONSTRUCTION |
| 1 | 02/27/08 | ADD COLUMN REINF AND DETAILS |
| 2 | 04/23/08 | COLUMN REINF FOR UPPER LEVELS |
| 3A | 06/20/08 | PENTHOUSE, PH ROOF & PAV D SLABS |
| 3 | 09/08/08 | RE-ISSUED FOR CONSTRUCTION |
| 5 | 10/31/08 | REVISE SLAB OPENINGS |

GRAPHIC SCALE

CONTRACTORS

| | |
|---|---|
| A/E CON. NO. | GS-04P-07-EX-C-0099 |
| A/E TASK NO. | |
| CONS. CONTR. | |
| CONS. WORK | |
| PRIME A/E | |
| SUB A/E | |
| CONSTR. CON. | |

BUILDING

| | |
|---|---|
| NAME | ARMED FORCES RETIREMENT HOME |
| STREET | 1800 BEACH DRIVE |
| CITY/ST./ZIP | GULFPORT, MS 39507 |
| BUILDING NO. | |
| OTHER BUILDING NOs. | |
| FACILITY CODE | |

PROJECT

| | |
|---|---|
| PROJECT TITLE | ARMED FORCES RETIREMENT HOME GULFPORT, MISSISSIPPI |
| PROJECT DESCRIPTION | NEW CONSTRUCTION |
| PROJECT NO. | 31942982 |
| GSA PM | STEVEN SMITH |
| SUBMISSION | ISSUED FOR CONSTRUCTION |
| SUB. DATE | 09/08/2008 |

DRAWING

| | |
|---|---|
| DRAWING TITLE | COLUMN SCHEDULE |
| FILE NAME | S-607-N0095730.DWG |
| FLOOR NO. | 00 |
| DRAWN BY | JVS DATE DRAFTED: |
| CHECKED BY | MWZ SHEET SIZE: 34 X 44 |
| DRAWING NO. | S 6 07 (DISCIPLINE SHEET TYPE SEQUENCE) |
| | SHEET 000 OF 000 |

## COLUMN SCHEDULE - MECH ROOM #1 (WEST)

| LEVEL \ COLUMN MARK | | L.6-0.1 | M-0.1 | N-0.1 | P-0.1 | Q-0.1 | R-0.1 | S-0.1 | L.6-0.3 | M-0.3 | N-0.3 | P-0.3 | Q-0.3 | R-0.3 | S-0.3 | L.6-0.6 | M-0.6 | N-0.6 | P-0.6 | Q-0.6 | R-0.6 | S-0.6 | L.6-0.9 | M-0.9 | N-0.9 | P-0.9 | Q-0.9 | R-0.9 | S-0.9 |
|---|---|---|---|---|---|---|---|---|---|---|---|---|---|---|---|---|---|---|---|---|---|---|---|---|---|---|---|---|---|
| ROOF | SIZE | | | | | | | | | | | | | | | | | | | | | | | | | | | | |
| | REINF | | | | | | | | | | | | | | | | | | | | | | | | | | | | |
| | TIES | | | | | | | | | | | | | | | | | | | | | | | | | | | | |
| | TYPE | | | | | | | | | | | | | | | | | | | | | | | | | | | | |
| LEVEL ONE | SIZE | 24"x24" | 24"x24" | 24"x24" | 24"x24" | 24"x24" | 24"x24" | 24"x24" | 24"x24" | 24"x24" | 24"x24" | 24"x24" | 24"x24" | 24"x24" | 24"x24" | 24"x24" | 24"x24" | 24"x24" | 24"x24" | 24"x24" | 24"x24" | 24"x24" | 24"x24" | 24"x24" | 24"x24" | 24"x24" | 24"x24" | 24"x24" | 24"x24" |
| | REINF | 8 #8 | 8 #8 | 8 #8 | 8 #8 | 8 #8 | 8 #8 | 8 #8 | 8 #8 | 8 #8 | 8 #8 | 8 #8 | 8 #8 | 8 #8 | 8 #8 | 8 #8 | 8 #8 | 8 #8 | 8 #8 | 8 #8 | 8 #8 | 8 #8 | 8 #8 | 8 #8 | 8 #8 | 8 #8 | 8 #8 | 8 #8 | 8 #8 |
| | TIES | #3 @ 16" | #3 @ 16" | #3 @ 16" | #3 @ 16" | #3 @ 16" | #3 @ 16" | #3 @ 16" | #3 @ 16" | #3 @ 16" | #3 @ 16" | #3 @ 16" | #3 @ 16" | #3 @ 16" | #3 @ 16" | #3 @ 16" | #3 @ 16" | #3 @ 16" | #3 @ 16" | #3 @ 16" | #3 @ 16" | #3 @ 16" | #3 @ 16" | #3 @ 16" | #3 @ 16" | #3 @ 16" | #3 @ 16" | #3 @ 16" | #3 @ 16" |
| | TYPE | T2 | T2 | T2 | T2 | T2 | T2 | T2 | T2 | T2 | T2 | T2 | T2 | T2 | T2 | T2 | T2 | T2 | T2 | T2 | T2 | T2 | T2 | T2 | T2 | T2 | T2 | T2 | T2 |
| GARAGE LEVEL | SIZE | 24"x24" | 24"x24" | 24"x24" | 24"x24" | 24"x24" | 24"x24" | 24"x24" | 24"x24" | 24"x24" | 24"x24" | 24"x24" | 24"x24" | 24"x24" | 24"x24" | 24"x24" | 24"x24" | 24"x24" | 24"x24" | 24"x24" | 24"x24" | 24"x24" | 24"x24" | 24"x24" | 24"x24" | 24"x24" | 24"x24" | 24"x24" | 24"x24" |
| | REINF | 8 #8 | 8 #8 | 8 #8 | 8 #8 | 8 #8 | 8 #8 | 8 #8 | 8 #8 | 8 #8 | 8 #8 | 8 #8 | 8 #8 | 8 #8 | 8 #8 | 8 #8 | 8 #8 | 8 #8 | 8 #8 | 8 #8 | 8 #8 | 8 #8 | 8 #8 | 8 #8 | 8 #8 | 8 #8 | 8 #8 | 8 #8 | 8 #8 |
| | TIES | #3 @ 10" | #3 @ 10" | #3 @ 10" | #3 @ 10" | #3 @ 10" | #3 @ 10" | #3 @ 10" | #3 @ 10" | #3 @ 10" | #3 @ 10" | #3 @ 10" | #3 @ 10" | #3 @ 10" | #3 @ 10" | #3 @ 10" | #3 @ 10" | #3 @ 10" | #3 @ 10" | #3 @ 10" | #3 @ 10" | #3 @ 10" | #3 @ 10" | #3 @ 10" | #3 @ 10" | #3 @ 10" | #3 @ 10" | #3 @ 10" | #3 @ 10" |
| | TYPE | T2 | T2 | T2 | T2 | T2 | T2 | T2 | T2 | T2 | T2 | T2 | T2 | T2 | T2 | T2 | T2 | T2 | T2 | T2 | T2 | T2 | T2 | T2 | T2 | T2 | T2 | T2 | T2 |
| DOWELS | | 8 #8 | 8 #8 | 8 #8 | 8 #8 | 8 #8 | 8 #8 | 8 #8 | 8 #8 | 8 #8 | 8 #8 | 8 #8 | 8 #8 | 8 #8 | 8 #8 | 8 #8 | 8 #8 | 8 #8 | 8 #8 | 8 #8 | 8 #8 | 8 #8 | 8 #8 | 8 #8 | 8 #8 | 8 #8 | 8 #8 | 8 #8 | 8 #8 |
| REMARKS | | – | – | – | – | – | – | – | – | – | – | – | – | – | – | – | – | – | – | – | – | – | – | – | – | – | – | – | – |
| FOUNDATION SERVICE LOAD (k) | | 50 | 83 | 96 | 96 | 96 | 106 | 69 | 89 | 147 | 178 | 178 | 178 | 178 | 129 | 99 | 163 | 196 | 196 | 196 | 196 | 143 | 57 | 90 | 103 | 103 | 103 | 103 | 77 |

2

## COLUMN SCHEDULE - MECH ROOM #2 (EAST)

| LEVEL \ COLUMN MARK | | M.1-23 | P-23 | Q-23 | R-23 | S-23 | U-23 | M.1-24.5 | P-24.5 | Q-24.5 | R-24.5 | S-24.5 | U-24.5 | M.1-25.7 | P-26.2 | Q-26.2 | R-26.2 | S-26.2 | U-26.2 | P-28.1 | Q-28.1 | R-28.1 | S-28.1 | U-28.1 |
|---|---|---|---|---|---|---|---|---|---|---|---|---|---|---|---|---|---|---|---|---|---|---|---|---|
| ROOF | SIZE | | | | | | | | | | | | | | | | | | | | | | | |
| | REINF | | | | | | | | | | | | | | | | | | | | | | | |
| | TIES | | | | | | | | | | | | | | | | | | | | | | | |
| | TYPE | | | | | | | | | | | | | | | | | | | | | | | |
| LEVEL ONE | SIZE | 20"x24" | 24"x24" | 24"x24" | 24"x24" | 24"x24" | 24"x24" | 20"x24" | 24"x24" | 24"x24" | 24"x24" | 24"x24" | 24"x24" | | 24"x24" | 24"x24" | 24"x24" | 24"x24" | 24"x24" | 24"x24" | 24"x24" | 24"x24" | 24"x24" | 24"x24" |
| | REINF | 8 #7 | 8 #8 | 8 #8 | 8 #8 | 8 #8 | 8 #8 | 8 #7 | 8 #8 | 8 #8 | 8 #8 | 8 #8 | 8 #8 | | 8 #8 | 8 #8 | 8 #8 | 8 #8 | 8 #8 | 8 #8 | 8 #8 | 8 #8 | 8 #8 | 8 #8 |
| | TIES | #3 @ 14" | #3 @ 16" | #3 @ 16" | #3 @ 16" | #3 @ 16" | #3 @ 16" | #3 @ 14" | #3 @ 16" | #3 @ 16" | #3 @ 16" | #3 @ 16" | #3 @ 16" | | #3 @ 16" | #3 @ 16" | #3 @ 16" | #3 @ 16" | #3 @ 16" | #3 @ 16" | #3 @ 16" | #3 @ 16" | #3 @ 16" | #3 @ 16" |
| | TYPE | T2 | T2 | T2 | T2 | T2 | T2 | T2 | T2 | T2 | T2 | T2 | T2 | | T2 | T2 | T2 | T2 | T2 | T2 | T2 | T2 | T2 | T2 |
| GARAGE LEVEL | SIZE | 20"x24" | 24"x24" | 24"x24" | 24"x24" | 24"x24" | 24"x24" | | 24"x24" | 24"x24" | 24"x24" | 24"x24" | 24"x24" | 20"x24" | 24"x24" | 24"x24" | 24"x24" | 24"x24" | 24"x24" | 24"x24" | 24"x24" | 24"x24" | 24"x24" | 24"x24" |
| | REINF | 8 #7 | 8 #8 | 8 #8 | 8 #8 | 8 #8 | 8 #8 | | 8 #8 | 8 #8 | 8 #8 | 8 #8 | 8 #8 | 8 #7 | 8 #8 | 8 #8 | 8 #8 | 8 #8 | 8 #8 | 8 #8 | 8 #8 | 8 #8 | 8 #8 | 8 #8 |
| | TIES | #3 @ 8" | #3 @ 10" | #3 @ 10" | #3 @ 10" | #3 @ 10" | #3 @ 10" | | #3 @ 10" | #3 @ 10" | #3 @ 10" | #3 @ 10" | #3 @ 10" | #3 @ 8" | #3 @ 10" | #3 @ 10" | #3 @ 10" | #3 @ 10" | #3 @ 10" | #3 @ 10" | #3 @ 10" | #3 @ 10" | #3 @ 10" | #3 @ 10" |
| | TYPE | T2 | T2 | T2 | T2 | T2 | T2 | | T2 | T2 | T2 | T2 | T2 | T2 | T2 | T2 | T2 | T2 | T2 | T2 | T2 | T2 | T2 | T2 |
| DOWELS | | 8 #7 | 8 #8 | 8 #8 | 8 #8 | 8 #8 | 8 #8 | 8 #7 | 8 #8 | 8 #8 | 8 #8 | 8 #8 | 8 #8 | 8 #7 | 8 #8 | 8 #8 | 8 #8 | 8 #8 | 8 #8 | 8 #8 | 8 #8 | 8 #8 | 8 #8 | 8 #8 |
| REMARKS | | – | – | – | – | – | – | – | – | – | – | – | – | – | – | – | – | – | – | – | – | – | – | – |
| FOUNDATION SERVICE LOAD (k) | | 159 | 86 | 130 | 116 | 130 | 86 | – | 220 | 372 | 332 | 372 | 220 | 101 | 176 | 249 | 249 | 249 | 176 | 104 | 170 | 154 | 170 | 104 |

2 3 3 3

## COLUMN SCHEDULE - MECH ROOM #3 (NORTH)

| LEVEL \ COLUMN MARK | | AF-19 | AE-19 | AD-19 | AB-19 2 | A.8-19 | AF-20 | AE-20 | AD-20 | AB-20 2 | A.8-20 | AF-21 | AE-21 | AD-21 | AB-21 2 | A.8-21 | A.8-22 | AF-23 | AE-23 | AD-23 | AB-23 2 | A.7-23.3 | AC-24.8 | A.7-24.8 | AF-25 | AE-25 | AD-25 | | | AF-25.9 | AE-25.9 | AD-25.9 | AC-25.9 | | |
|---|---|---|---|---|---|---|---|---|---|---|---|---|---|---|---|---|---|---|---|---|---|---|---|---|---|---|---|---|---|---|---|---|---|---|---|
| ROOF | SIZE | | | | | | | | | | | | | | | | | | | | | | | | | | | | | | | | | | |
| | REINF | | | | | | | | | | | | | | | | | | | | | | | | | | | | | | | | | | |
| | TIES | | | | | | | | | | | | | | | | | | | | | | | | | | | | | | | | | | |
| | TYPE | | | | | | | | | | | | | | | | | | | | | | | | | | | | | | | | | | |
| LEVEL ONE | SIZE | 24"x24" | 24"x24" | 24"x24" | 24"x24" | 24"x24" | 24"x24" | 24"x24" | 24"x24" | 24"x24" | 24"x24" | 24"x24" | 24"x24" | 24"x24" | 24"x24" | 24"x24" | 24"x24" | 24"x24" | 24"x24" | 24"x24" | 24"x24" | 24"x24" | 24"x24" | 24"x24" | 24"x24" | 24"x24" | 24"x24" | | | 24"x24" | 24"x24" | 24"x24" | 24"x24" | | |
| | REINF | 8 #8 | 8 #8 | 8 #8 | 8 #8 | 8 #8 | 8 #8 | 8 #8 | 8 #8 | 8 #8 | 8 #8 | 8 #8 | 8 #8 | 8 #8 | 8 #8 | 8 #8 | 8 #8 | 8 #8 | 8 #8 | 8 #8 | 8 #8 | 8 #8 | 8 #8 | 8 #8 | 8 #8 | 8 #8 | 8 #8 | | | 8 #8 | 8 #8 | 8 #8 | 8 #8 | | |
| | TIES | #3 @ 16" | #3 @ 16" | #3 @ 16" | #3 @ 16" | #3 @ 16" | #3 @ 16" | #3 @ 16" | #3 @ 16" | #3 @ 16" | #3 @ 16" | #3 @ 16" | #3 @ 16" | #3 @ 16" | #3 @ 16" | #3 @ 16" | #3 @ 16" | #3 @ 16" | #3 @ 16" | #3 @ 16" | #3 @ 16" | #3 @ 16" | #3 @ 16" | #3 @ 16" | #3 @ 16" | #3 @ 16" | #3 @ 16" | #3 @ 16" | | | #3 @ 16" | #3 @ 16" | #3 @ 16" | #3 @ 16" | | |
| | TYPE | T2 | T2 | T2 | T2 | T2 | T2 | T2 | T2 | T2 | T2 | T2 | T2 | T2 | T2 | T2 | T2 | T2 | T2 | T2 | T2 | T2 | T2 | T2 | T2 | T2 | T2 | | | T2 | T2 | T2 | T2 | | |
| GARAGE LEVEL | SIZE | 24"x24" | 24"x24" | 24"x24" | 24"x24" | 24"x24" | 24"x24" | 24"x24" | 24"x24" | 24"x24" | 24"x24" | 24"x24" | 24"x24" | 24"x24" | 24"x24" | 24"x24" | 24"x24" | 24"x24" | 24"x24" | 24"x24" | 24"x24" | 24"x24" | 24"x24" | 24"x24" | 24"x24" | 24"x24" | 24"x24" | | | 24"x24" | 24"x24" | 24"x24" | 24"x24" | | |
| | REINF | 8 #8 | 8 #8 | 8 #8 | 8 #8 | 8 #8 | 8 #8 | 8 #8 | 8 #8 | 8 #8 | 8 #8 | 8 #8 | 8 #8 | 8 #8 | 8 #8 | 8 #8 | 8 #8 | 8 #8 | 8 #8 | 8 #8 | 8 #8 | 8 #8 | 8 #8 | 8 #8 | 8 #8 | 8 #8 | 8 #8 | | | 8 #8 | 8 #8 | 8 #8 | 8 #8 | | |
| | TIES | #3 @ 10" | #3 @ 10" | #3 @ 10" | #3 @ 10" | #3 @ 10" | #3 @ 10" | #3 @ 10" | #3 @ 10" | #3 @ 10" | #3 @ 10" | #3 @ 10" | #3 @ 10" | #3 @ 10" | #3 @ 10" | #3 @ 10" | #3 @ 10" | #3 @ 10" | #3 @ 10" | #3 @ 10" | #3 @ 10" | #3 @ 10" | #3 @ 10" | #3 @ 10" | #3 @ 10" | #3 @ 10" | #3 @ 10" | #3 @ 10" | | | #3 @ 10" | #3 @ 10" | #3 @ 10" | #3 @ 10" | | |
| | TYPE | T2 | T2 | T2 | T2 | T2 | T2 | T2 | T2 | T2 | T2 | T2 | T2 | T2 | T2 | T2 | T2 | T2 | T2 | T2 | T2 | T2 | T2 | T2 | T2 | T2 | T2 | | | T2 | T2 | T2 | T2 | | |
| DOWELS | | 8 #8 | 8 #8 | 8 #8 | 8 #8 | 8 #8 | 8 #8 | 8 #8 | 8 #8 | 8 #8 | 8 #8 | 8 #8 | 8 #8 | 8 #8 | 8 #8 | 8 #8 | 8 #8 | 8 #8 | 8 #8 | 8 #8 | 8 #8 | 8 #8 | 8 #8 | 8 #8 | 8 #8 | 8 #8 | 8 #8 | | | 8 #8 | 8 #8 | 8 #8 | 8 #8 | | |
| REMARKS | | – | – | – | – | – | – | – | – | – | – | – | – | – | – | – | – | – | – | – | – | – | – | – | – | – | – | – | – | – | – | – | – | – | – |
| FOUNDATION SERVICE LOAD (k) | | 152 | 207 | 154 | 203 | 106 | 222 | 341 | 244 | 332 | 156 | 191 | 295 | 213 | 293 | 152 | 108 | 223 | 298 | 214 | 293 | 94 | 196 | 85 | 193 | 262 | 187 | – | – | 152 | 205 | 152 | 108 | – | – |

2

## COLUMN SCHEDULE - MECH ROOM #3 (NORTH, CONT.)

| LEVEL \ COLUMN MARK | | AF-26.9 | AE-26.9 | AD-26.9 | AC-26.9 | | AF-28 | AE-28 | AD-28 | AC-28 | |
|---|---|---|---|---|---|---|---|---|---|---|---|
| ROOF | SIZE | | | | | | | | | | |
| | REINF | | | | | | | | | | |
| | TIES | | | | | | | | | | |
| | TYPE | | | | | | | | | | |
| LEVEL ONE | SIZE | 24"x24" | 24"x24" | 24"x24" | 24"x24" | | 24"x20" | 24"x20" | 24"x20" | 24"x20" | |
| | REINF | 8 #8 | 8 #8 | 8 #8 | 8 #8 | | 8 #8 | 8 #7 | 8 #7 | 8 #7 | |
| | TIES | #3 @ 16" | #3 @ 16" | #3 @ 16" | #3 @ 16" | | #3 @ 16" | #3 @ 14" | #3 @ 14" | #3 @ 14" | |
| | TYPE | T2 | T2 | T2 | T2 | | T2 | T2 | T2 | T2 | |
| GARAGE LEVEL | SIZE | 24"x24" | 24"x24" | 24"x24" | 24"x24" | | 24"x20" | 24"x20" | 24"x20" | 24"x20" | |
| | REINF | 8 #8 | 8 #8 | 8 #8 | 8 #8 | | 8 #8 | 8 #7 | 8 #7 | 8 #7 | |
| | TIES | #3 @ 10" | #3 @ 10" | #3 @ 10" | #3 @ 10" | | #3 @ 8" | #3 @ 8" | #3 @ 8" | #3 @ 8" | |
| | TYPE | T2 | T2 | T2 | T2 | | T2 | T2 | T2 | T2 | |
| DOWELS | | 8 #8 | 8 #8 | 8 #8 | 8 #8 | | 8 #8 | 8 #7 | 8 #7 | 8 #7 | |
| REMARKS | | – | – | – | – | – | – | – | – | – | – |
| FOUNDATION SERVICE LOAD (k) | | 148 | 196 | 143 | 103 | – | 101 | 132 | 109 | 71 | – |

2

## COLUMN SCHEDULE - MAIN ENTRY & PLAZA

| LEVEL \ COLUMN MARK | | TYP MAIN ENTRY COL | TYP TERRACE PLAZA COL |
|---|---|---|---|
| ROOF | SIZE | | |
| | REINF | | |
| | TIES | | |
| | TYPE | | |
| LEVEL ONE | SIZE | 24"x24" | |
| | REINF | 8 #8 | |
| | TIES | #3 @ 16" | |
| | TYPE | T2 | |
| GARAGE LEVEL | SIZE | 24"x24" | 24"x24" |
| | REINF | 8 #8 | 8 #8 |
| | TIES | #3 @ 10" | #3 @ 10" |
| | TYPE | T2 | T2 |
| DOWELS | | 8 #8 | 8 #8 |
| REMARKS | | – | – |
| FOUNDATION SERVICE LOAD (k) | | 228 | 135 |

3

NOTES:
1. SERVICE LOADS INDICATED INCLUDE DEAD LOAD PLUS LIVE LOAD ONLY.
2. CONCRETE COMPRESSIVE STRENGTH (f'c) EQUALS 5000 PSI FOR ALL COLUMNS, UNO.
3. REFER TO S-501 FOR COLUMN DETAILS.
4. REFER TO S-501 FOR MINIMUM COMPRESSION DEVELOPMENT LENGTH TABLE FOR COLUMN DOWELS.
5. REFER TO S-501 FOR MINIMUM COMPRESSION LAP SPLICE LENGTH TABLE FOR COLUMN VERTICAL BARS. (2)
6. FIRST ENTRY IS NORTH-SOUTH COLUMN DIMENSION AND SECOND ENTRY IS EAST-WEST COLUMN DIMENSION.

3

PROPERTY OF THE UNITED STATES GOVERNMENT – FOR OFFICIAL USE ONLY. Do not remove this notice. Properly destroy documents when no longer needed.

GSA
GENERAL SERVICES ADMINISTRATION
77 FORSYTH STREET
SUITE 600
ATLANTA, GA 30303
TEL: (404)331-3200

AFRH The Premier Retirement Community for America's Veterans
JACOBS
PROJECT MANAGEMENT CONSULTANT TO THE GENERAL SERVICES ADMINISTRATION

YATES CONSTRUCTION

SFCS Architecture Engineering Planning Interiors

URS
URS CORPORATION
2020 K ST, NW
SUITE 300
WASHINGTON D.C. 20006

ISSUED FOR CONSTRUCTION

CERTIFICATIONS

DISTRICT OF COLUMBIA
MARK W. ZIMFREMAN
8572
REGISTERED PROFESSIONAL ENGINEER
09/08/08

KEY PLAN

REVISION NOTES

| MARK | DATE | DESCRIPTION |
|---|---|---|
| | 01/15/08 | COLUMN FOUNDATION SUBMISSION |
| | 01/15/08 | ISSUED FOR CONSTRUCTION |
| 1 | 02/27/08 | ADD COLUMN REINF AND DETAILS |
| 2 | 07/25/08 | ADD PILE CAP DETAILS |
| 3 | 08/18/08 | REVISED ENTRY & LOADING DOCK |
| 4 | 09/08/08 | RE-ISSUED FOR CONSTRUCTION |

GRAPHIC SCALE

CONTRACTORS

| | |
|---|---|
| A/E CON. NO. | GS-04P-07-EX-C-0099 |
| A/E TASK NO. | |
| CONS. CONTR. | |
| CONS. WORK | |
| PRIME A/E | |
| SUB A/E | |
| CONSTR. CON. | |

BUILDING

| | |
|---|---|
| NAME | ARMED FORCES RETIREMENT HOME |
| STREET | 1800 BEACH DRIVE |
| CITY/ST./ZIP | GULFPORT, MS 39507 |
| BUILDING NO. | |
| OTHER BUILDING NOs. | |
| FACILITY CODE | |

PROJECT

| | |
|---|---|
| PROJECT TITLE | ARMED FORCES RETIREMENT HOME GULFPORT, MISSISSIPPI |
| PROJECT DESCRIPTION | NEW CONSTRUCTION |
| PROJECT NO. | 31942982 |
| GSA PM | STEVEN SMITH |
| SUBMISSION | ISSUED FOR CONSTRUCTION |
| SUB. DATE | 09/08/2008 |

DRAWING

| | |
|---|---|
| DRAWING TITLE | COLUMN SCHEDULE |
| FILE NAME | S-608-N0095730.DWG |
| FLOOR NO. | 00 |
| DRAWN BY | JVS DATE DRAFTED: |
| CHECKED BY | MWZ SHEET SIZE: 34 X 44 |
| DRAWING NO. | S 6 08 (DISCIPLINE SHEET TYPE SEQUENCE) |
| | SHEET 000 OF 000 |

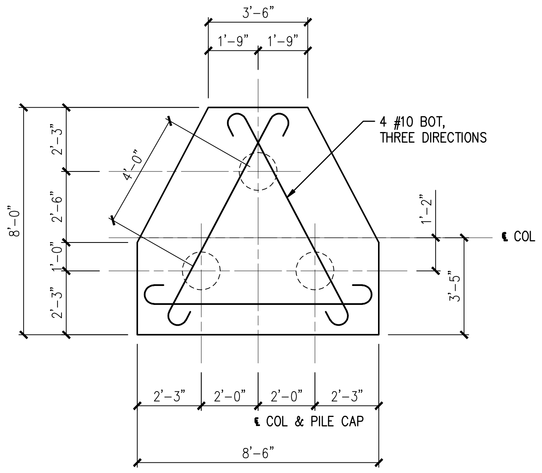


NOTE: PILE CAP DEPTH = 46"

1 S609 **PILE CAP "16PC3"**
3/8" = 1'-0"

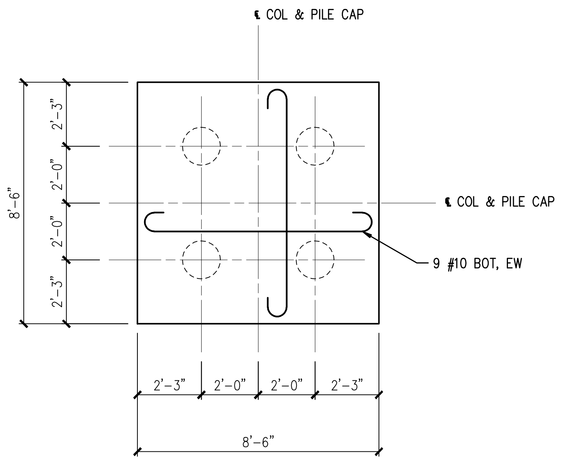


NOTE: PILE CAP DEPTH = 46"

2 S609 **PILE CAP "16PC4"**
3/8" = 1'-0"

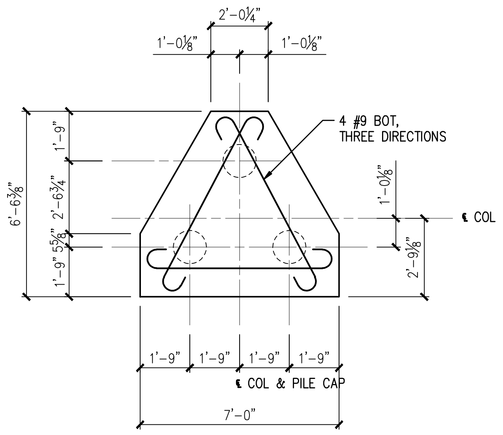


NOTE: PILE CAP DEPTH = 40"

PILECAP "12PC3" SIMILAR. 4

3 S609 **PILE CAP "14PC3"**
3/8" = 1'-0"

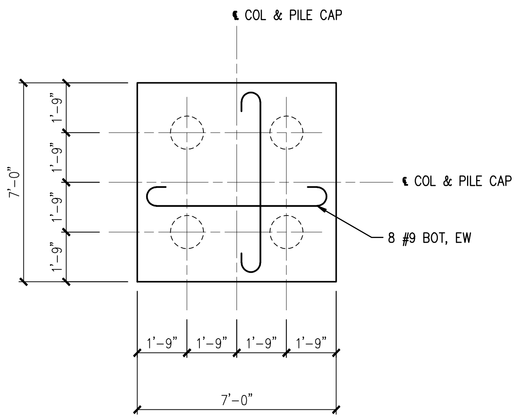


NOTE: PILE CAP DEPTH = 40"

4 S609 **PILE CAP "14PC4"**
3/8" = 1'-0"

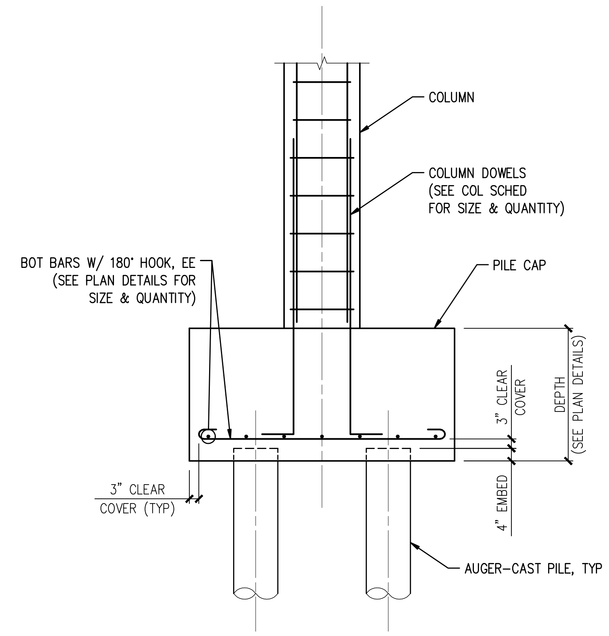


5 S609 **TYP PILE CAP DETAIL**
N.T.S.

1

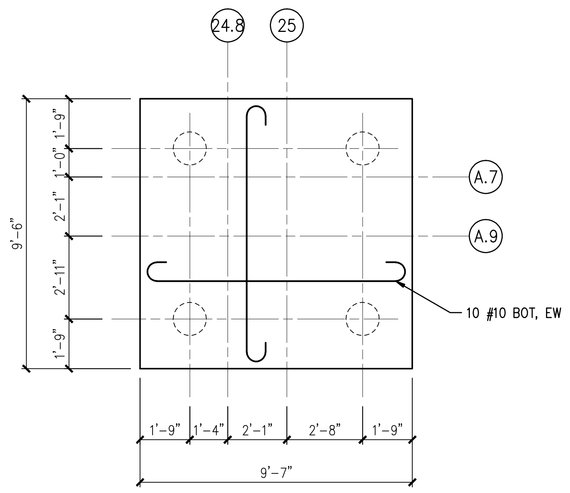


NOTE: PILE CAP DEPTH = 40"

6 S609 **PILE CAP "14PC4A"**
3/8" = 1'-0"

3

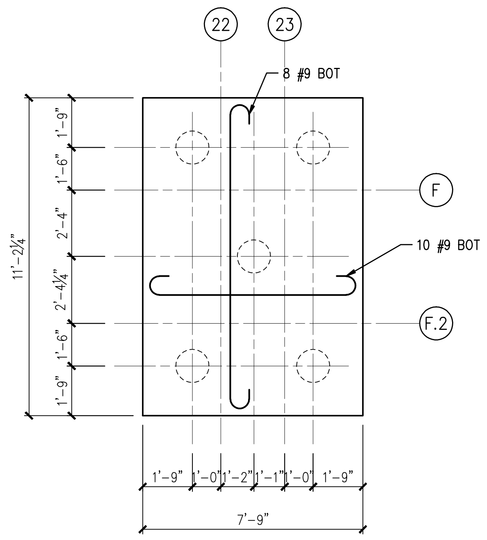


NOTE: PILE CAP DEPTH = 40"

7 S609 **PILE CAP "14PC5"**
3/8" = 1'-0"

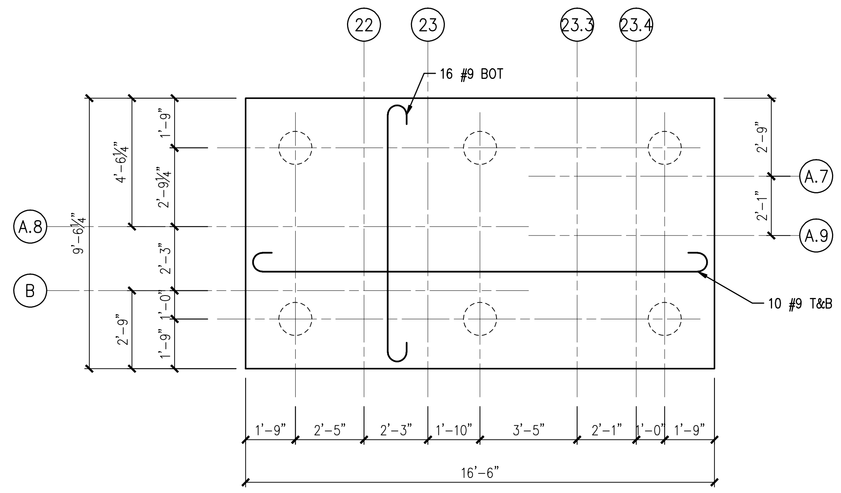


NOTE: PILE CAP DEPTH = 40"

8 S609 **PILE CAP "14PC6"**
3/8" = 1'-0"

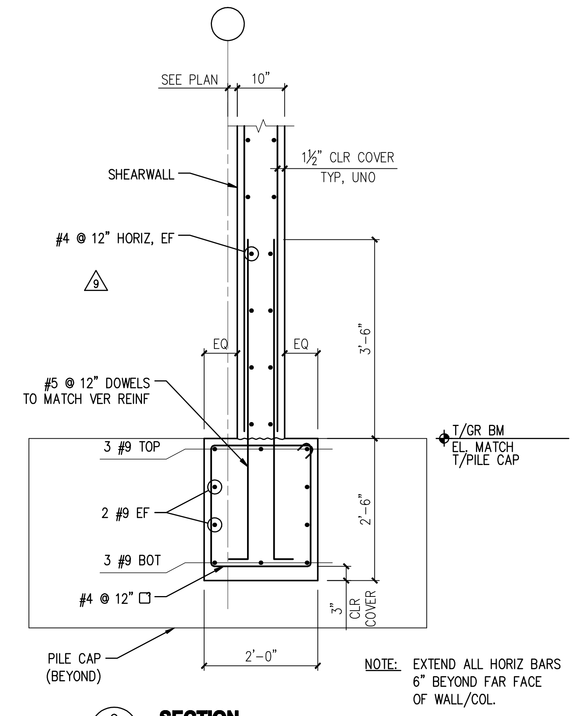


NOTE: EXTEND ALL HORIZ BARS 6" BEYOND FAR FACE OF WALL/COL.

9 S609 **SECTION**
3/4" = 1'-0"

4

3

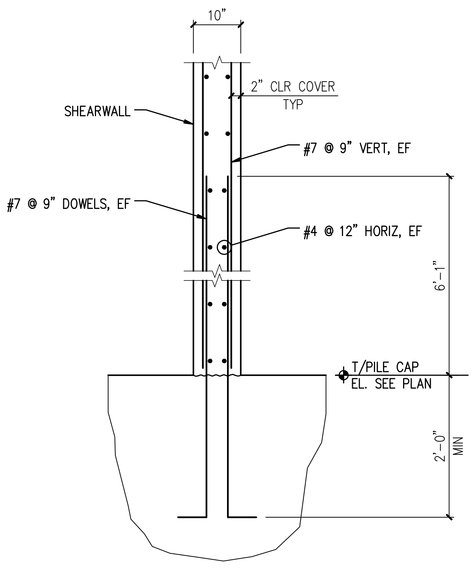


10 S609 **SECTION**
3/4" = 1'-0"

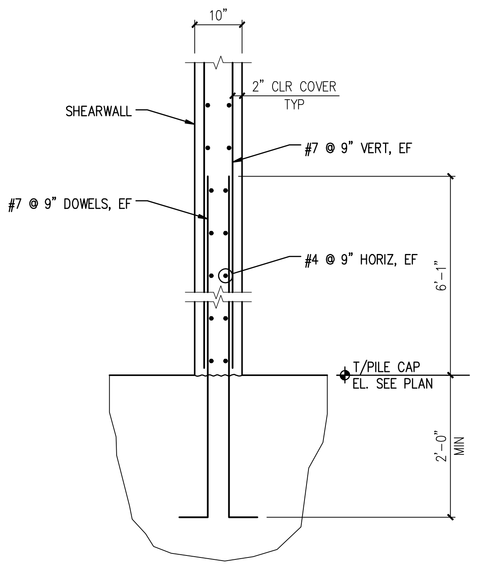


11 S609 **SECTION**
3/4" = 1'-0"

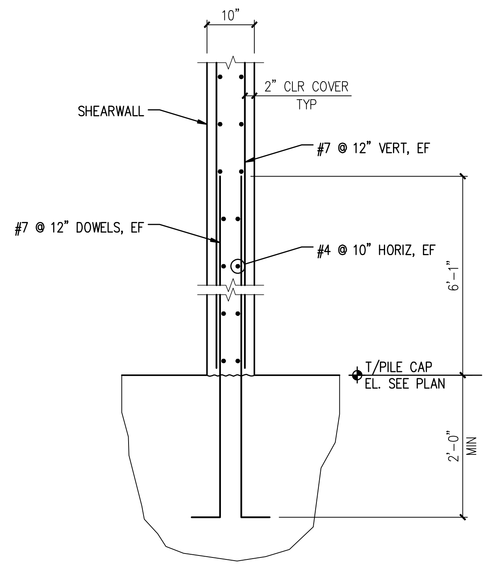


12 S609 **SECTION**
3/4" = 1'-0"

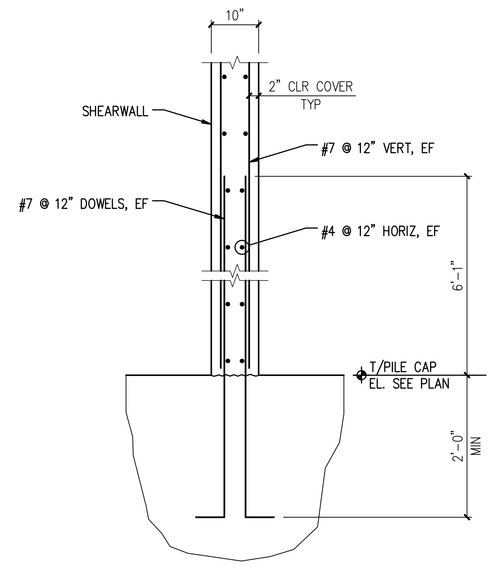


13 S609 **SECTION**
3/4" = 1'-0"

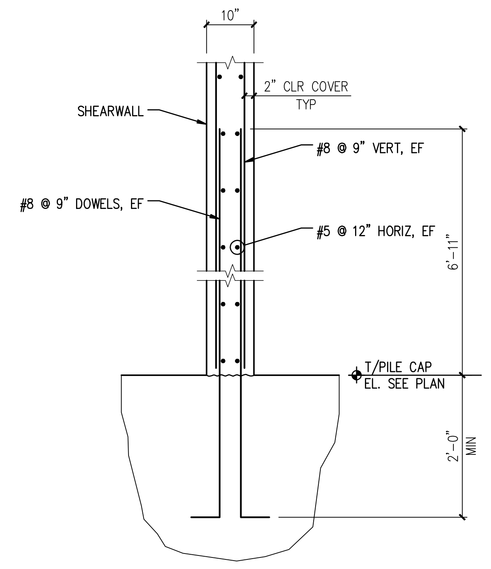


14 S609 **SECTION**
3/4" = 1'-0"

9

11

PROPERTY OF THE UNITED STATES GOVERNMENT – FOR OFFICIAL USE ONLY. Do not remove this notice. Properly destroy documents when no longer needed.

GSA
GENERAL SERVICES ADMINISTRATION
77 FORSYTH STREET
SUITE 600
ATLANTA, GA 30303
TEL: (404)331-3200

AFRH The Premier Retirement Community for America's Veterans

JACOBS
PROJECT MANAGEMENT CONSULTANT TO THE GENERAL SERVICES ADMINISTRATION

YATES CONSTRUCTION

SFCS Architecture Engineering Planning Interiors

URS
URS CORPORATION
2020 K ST, NW
SUITE 300
WASHINGTON D.C. 20006

ISSUED FOR CONSTRUCTION

CERTIFICATIONS

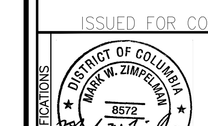


KEY PLAN

REVISION NOTES

| MARK | DATE | DESCRIPTION |
|---|---|---|
| | 01/15/08 | COLUMN FOUNDATION SUBMISSION |
| | 01/15/08 | ISSUED FOR CONSTRUCTION |
| 1 | 02/01/08 | ADD DETAIL |
| 2 | 03/07/08 | ADD PILES/PILE CAPS AT EXP JTS |
| 3 | 03/18/08 | ADD GRADE BEAM & 14PC14 |
| 4 | 03/27/08 | ADD 16PC25 & WALL REINF |
| 11 | 04/07/08 | ADD 16PC24, 16PC28 & WALL REINF |
| 12 | 09/08/08 | RE-ISSUED FOR CONSTRUCTION |

GRAPHIC SCALE

| | |
|---|---|
| A/E CON. NO. | GS-04P-07-EX-C-0099 |
| A/E TASK NO. | |
| CONS. CONTR. | |
| CONS. WORK | |
| PRIME A/E | |
| SUB A/E | |
| CONSTR. CON. | |
| NAME | ARMED FORCES RETIREMENT HOME |
| STREET | 1800 BEACH DRIVE |
| CITY/ST./ZIP | GULFPORT, MS 39507 |
| BUILDING NO. | |
| OTHER BUILDING NOs. | |
| FACILITY CODE | |
| PROJECT TITLE | ARMED FORCES RETIREMENT HOME GULFPORT, MISSISSIPPI |
| PROJECT DESCRIPTION | NEW CONSTRUCTION |
| PROJECT NO. | J1942982 |
| GSA PM | STEVEN SMITH |
| SUBMISSION | ISSUED FOR CONSTRUCTION |
| SUB. DATE | 09/08/2008 |
| DRAWING TITLE | PILE CAP DETAILS |
| FILE NAME | S-609-N0095730.DWG |
| FLOOR NO. | 00 |
| DRAWN BY | JVS DATE DRAFTED: |
| CHECKED BY | MWZ SHEET SIZE: 34 X 44 |
| DRAWING NO. | S 6 09 (DISCIPLINE / SHEET TYPE / SEQUENCE) |
| | SHEET 000 OF 000 |

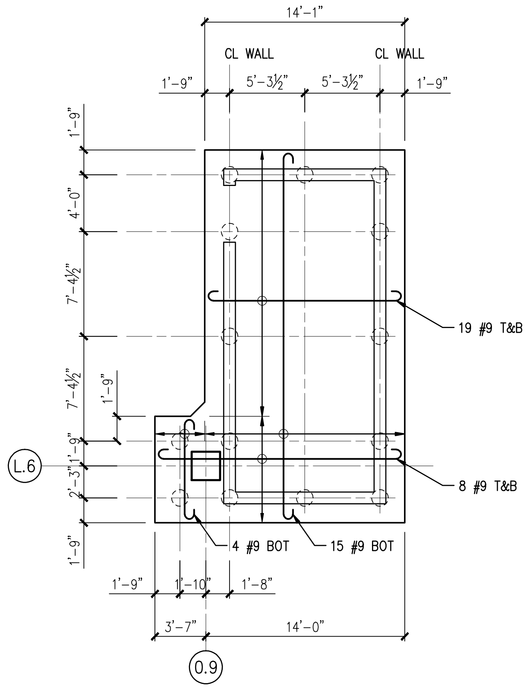


NOTE: PILE CAP DEPTH = 40"

1 S610 **PILE CAP "14PC14"**
3/16" = 1'-0"

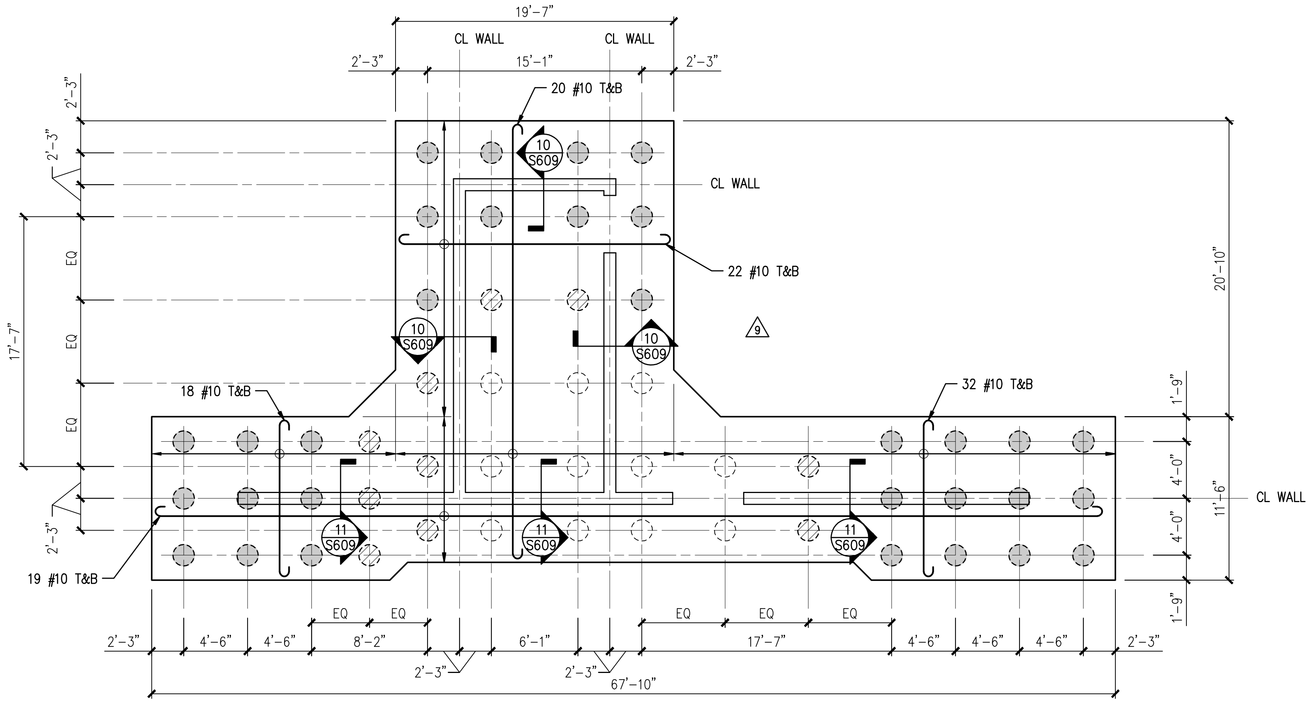


NOTE: PILE CAP DEPTH = 60"

INDICATES TENSION PILE "A"

INDICATES TENSION PILE "B"

2 S610 **PILE CAP "18PC52" (NORTH)**
3/16" = 1'-0"

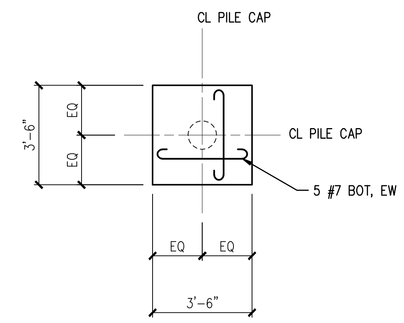


NOTE: PILE CAP DEPTH = 40"

10 S610 **PILE CAP "12PC1"**
3/8" = 1'-0"

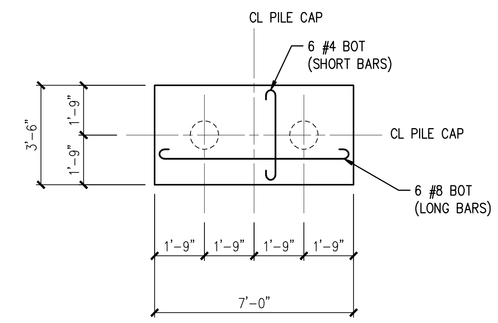


NOTE: PILE CAP DEPTH = 40"

11 S610 **PILE CAP "12PC2"**
3/8" = 1'-0"

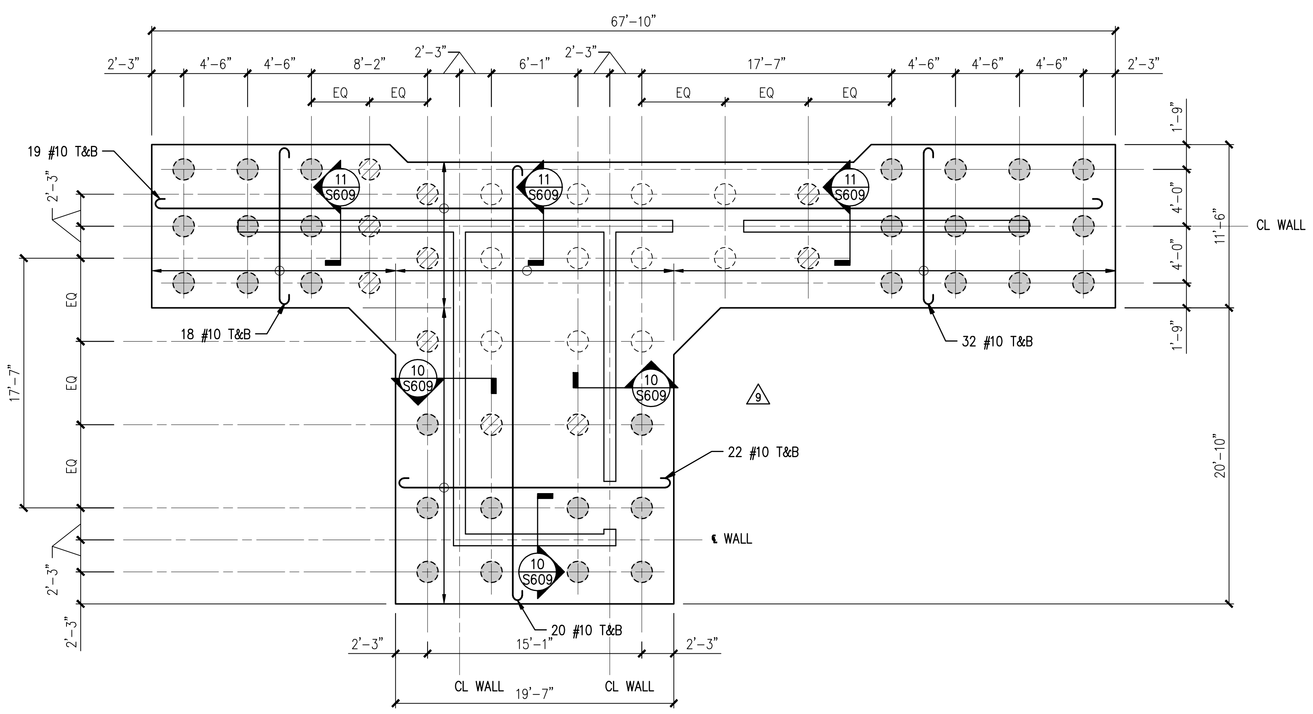


NOTE: PILE CAP DEPTH = 60"

INDICATES TENSION PILE "A"

INDICATES TENSION PILE "B"

3 S610 **PILE CAP "18PC52" (SOUTH)**
3/16" = 1'-0"

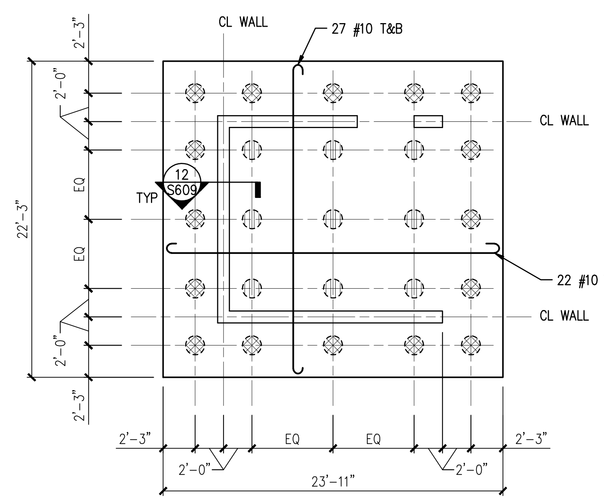


NOTE: PILE CAP DEPTH = 46"

INDICATES TENSION PILE "C"

INDICATES TENSION PILE "D"

4 S610 **PILE CAP "16PC25"**
3/16" = 1'-0"

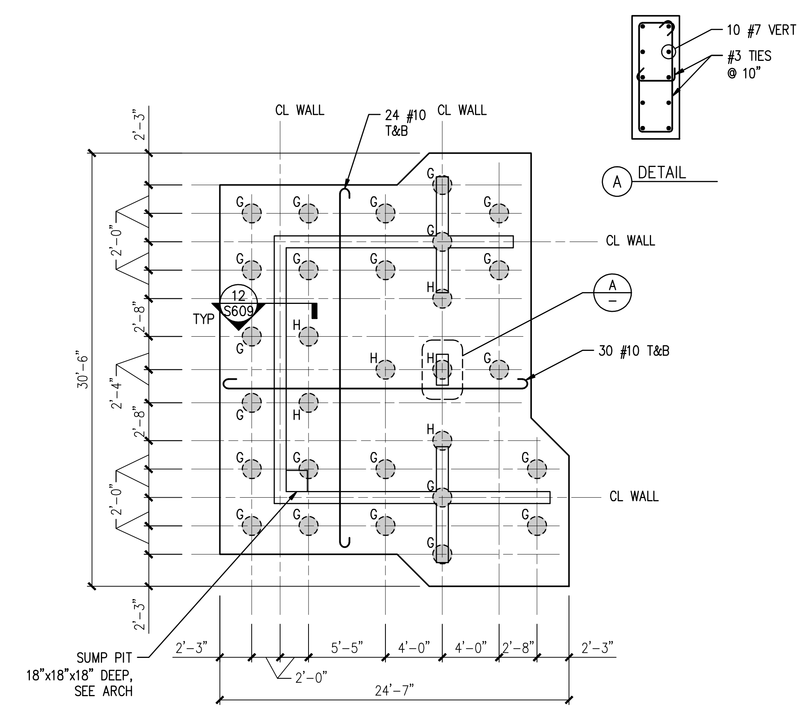


NOTE: PILE CAP DEPTH = 56"

INDICATES TENSION PILE "G"

INDICATES TENSION PILE "H"

5 S610 **PILE CAP "16PC29"**
3/16" = 1'-0"

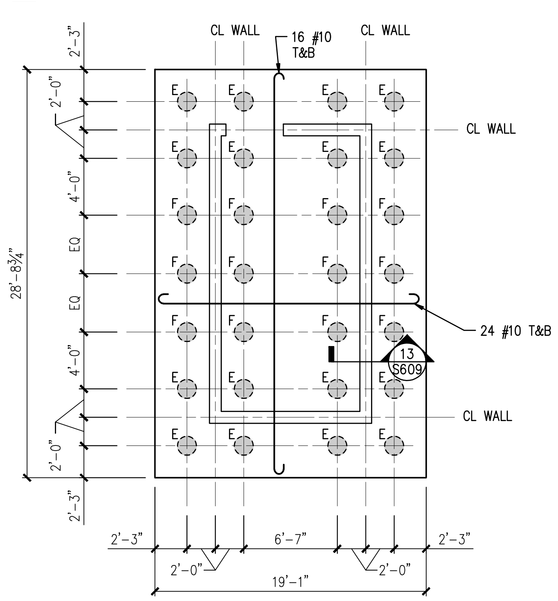


NOTE: PILE CAP DEPTH = 46"

INDICATES TENSION PILE "E"

INDICATES TENSION PILE "F"

6 S610 **PILE CAP "16PC28"**
3/16" = 1'-0"

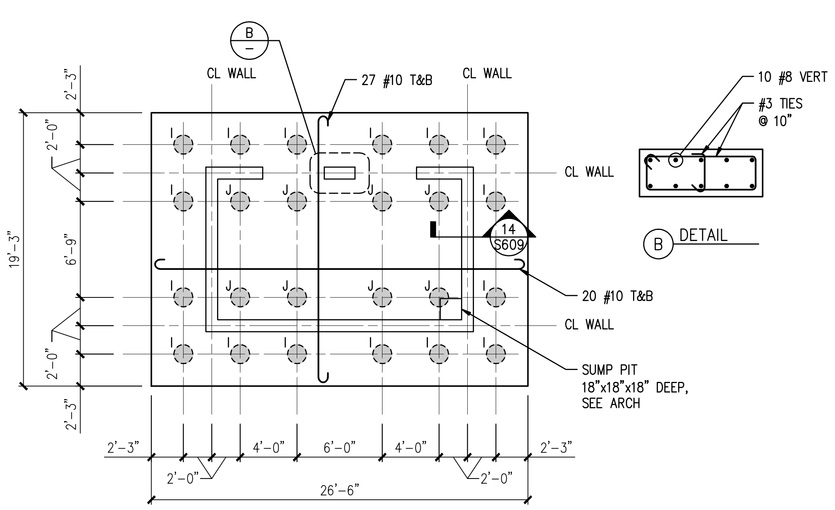


NOTE: PILE CAP DEPTH = 46"

INDICATES TENSION PILE "I"

INDICATES TENSION PILE "J"

7 S610 **PILE CAP "16PC24"**
3/16" = 1'-0"

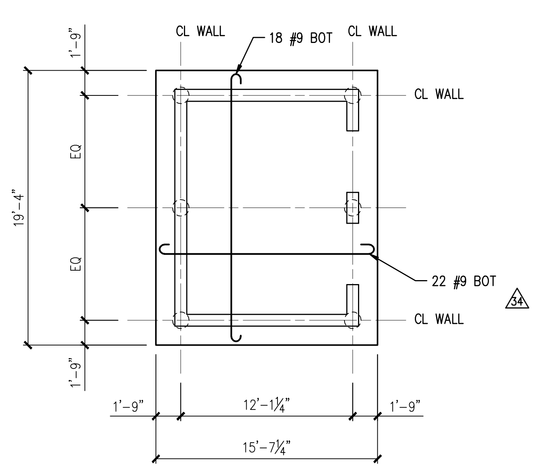


NOTE: PILE CAP DEPTH = 40"

8 S610 **PILE CAP "14PC6A"**
3/16" = 1'-0"

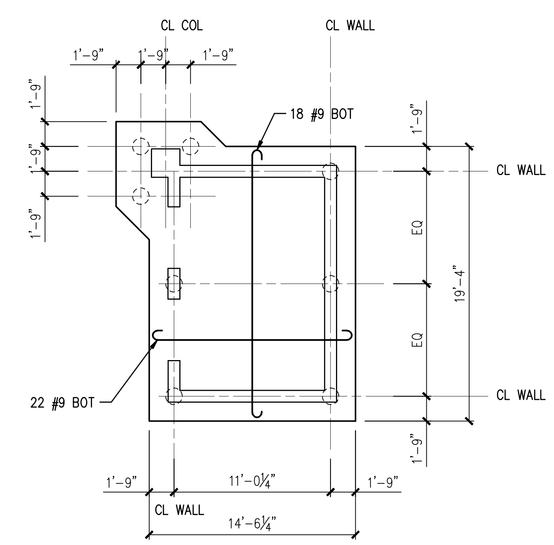


NOTE: PILE CAP DEPTH = 40"

9 S610 **PILE CAP "14PC8"**
3/16" = 1'-0"

PROPERTY OF THE UNITED STATES GOVERNMENT – FOR OFFICIAL USE ONLY. Do not remove this notice. Properly destroy documents when no longer needed.

GENERAL SERVICES ADMINISTRATION
77 FORSYTH STREET
SUITE 600
ATLANTA, GA 30303
TEL: (404)331-3200

JACOBS
PROJECT MANAGEMENT CONSULTANT TO
THE GENERAL SERVICES ADMINISTRATION

YATES CONSTRUCTION

SFCS Architecture Engineering Planning Interiors

URS CORPORATION
2020 K ST, NW
SUITE 300
WASHINGTON D.C. 20006

ISSUED FOR CONSTRUCTION

CERTIFICATIONS

DISTRICT OF COLUMBIA
MARK W. ZIMPFRAGEN
8572
REGISTERED
PROFESSIONAL ENGINEER
09/08/08

KEY PLAN

REVISION NOTES

| MARK | DATE | DESCRIPTION |
|---|---|---|
| 1 | 03/18/08 | ADD GRADE BEAM & 14PC14 |
| 2 | 03/20/08 | ADD 18PC52 |
| 3 | 03/27/08 | ADD 16PC25 & WALL REINF |
| 4 | 04/02/08 | ADD 16PC29 |
| 5 | 04/07/08 | ADD 16PC24, 16PC28 & WALL REINF |
| 6 | 07/25/08 | ADD PILE CAP DETAILS |
| 7 | 08/18/08 | REVISED ENTRY & LOADING DOCK |
| 8 | 09/08/08 | RE-ISSUED FOR CONSTRUCTION |

GRAPHIC SCALE

CONTRACTORS

| | |
|---|---|
| A/E CON. NO. | GS-04P-07-EX-C-0099 |
| A/E TASK NO. | |
| CONS. CONTR. | |
| CONS. WORK | |
| PRIME A/E | |
| SUB A/E | |
| CONSTR. CON. | |

BUILDING

| | |
|---|---|
| NAME | ARMED FORCES RETIREMENT HOME |
| STREET | 1800 BEACH DRIVE |
| CITY/ST./ZIP | GULFPORT, MS 39507 |
| BUILDING NO. | |
| OTHER BUILDING NOs. | |
| FACILITY CODE | |

PROJECT

| | |
|---|---|
| PROJECT TITLE | ARMED FORCES RETIREMENT HOME GULFPORT, MISSISSIPPI |
| PROJECT DESCRIPTION | NEW CONSTRUCTION |
| PROJECT NO. | 31942982 |
| GSA PM | STEVEN SMITH |
| SUBMISSION | ISSUED FOR CONSTRUCTION |
| SUB. DATE | 09/08/2008 |

DRAWING

| | |
|---|---|
| DRAWING TITLE | PILE CAP DETAILS |
| FILE NAME | S-610-N0095730.DWG |
| FLOOR NO. | 00 |
| DRAWN BY | JVS DATE DRAFTED: |
| CHECKED BY | MWZ SHEET SIZE: 34 X 44 |
| DRAWING NO. | 4 S 6 10 |
| | DISCIPLINE SHEET TYPE SEQUENCE |
| | SHEET 000 OF 000 |

## ONE-WAY SLAB SCHEDULE

| MARK | T | REINFORCEMENT: BOTTOM BARS | TOP BARS: LE | TOP BARS: FL | TOP BARS: RE | TEMPERATURE BARS | REMARKS |
|---|---|---|---|---|---|---|---|
| 1S1 | 11" | #6@12" | #4@12" | #5@12" | #4@12" | #5@12" | LAP 100% BOTTOM BARS |
| 1S2 | 11" | #5@12" | – | #5@12" | #4@12" | #5@12" | LAP 100% BOTTOM BARS |
| 1S3 | 11" | #5@12" | – | #5@12" | #5@12" | #5@12" | LAP 100% BOTTOM BARS |
| 34 1S4 | 11" | #5@12" | – | #5@12" | – | #5@12" | LAP 100% BOTTOM BARS |
| 1S5 | 8" | #5@12" | – | #5@12" | – | #5@12" | LAP 100% BOTTOM BARS |
| 36 1S6 | 8" | #6@12" | – | #6@12" | – | #5@12" | LAP 100% BOTTOM BARS |
| 1S7 | 9" | #4@12" | – | #6@12" | – | #4@12" T&B | HOOK 100% T&B BARS AT END OF CANT |
| | | | | | | | |
| 18 2S1 | 11" | #5@12" | – | #5@12" | – | #5@12" | HOOK 100% BOTTOM BARS |
| 34 2S2 | 8" | #5@12" | – | #5@12" | – | #5@12" | LAP 100% BOTTOM BARS |
| 2S3 | 9" | #5@12" | – | #5@12" | – | – | HOOK 100% T&B BARS AT END OF CANT |
| 37 | | | | | | | |
| TYP S1 | 8" | #5@12" | – | #5@12" | – | #4@12" | LAP 100% BOTTOM BARS |
| 20 | | | | | | | |
| PHS1 | 8" | #5@12" | – | #5@12" | #4@12" | #4@12" | LAP 100% BOTTOM BARS |
| PHS2 | 8" | #5@12" | – | #5@12" | #4@12" | #4@12" | LAP 100% BOTTOM BARS |
| PHS3 | 8" | #5@12" | – | #5@12" | – | #4@12" | LAP 100% BOTTOM BARS |
| PHS4 | 8" | #5@12" | – | #5@12" | – | #4@12" | LAP 100% BOTTOM BARS; ADD'L 4 #7 BOT, EW AT HOIST HOOK EMBED PLATES. |
| PHS5 | 8" | #5@12" | – | #5@12" | – | #4@12" | LAP 100% BOTTOM BARS 62 |
| PHS6 | 8" | #5@12" | – | #5@12" | – | #4@12" | LAP 100% BOTTOM BARS |
| | | | | | | | |
| RS1 | 8" | #4@12" | – | #4@12" | – | #4@12" | HOOK 100% BOTTOM BARS; ADD'L 4 #7 BOT (SHORT) AT HOIST HOOK EMBED PLATES. |
| 20 | | | | | | | 62 |

NOTE:

1. SEE TYPICAL ONE-WAY SLAB DETAIL ON S521.

## POST-TENSIONED BEAM SCHEDULE

| MARK | SIZE: W | SIZE: D | EFFECTIVE FORCE – Fe (KIPS) | "e" | x | y | REINFORCEMENT: BOTTOM BARS | TOP BARS: LE | TOP BARS: FL | TOP BARS: RE | STIRRUPS: SIZE | TYPE | SPACING | END | REMARKS |
|---|---|---|---|---|---|---|---|---|---|---|---|---|---|---|---|
| 2PTB1 | 36" | 36" | 1560 | 26" | 2" | – | 6 #9 | – | 9 #9 | – | #4 | D1 | 2@4", B@16" | EE | 2 #5 SIDE BARS, EF |
| 2PTB2 | 28" | 30" | 364 | 21¾" | 2" | – | 4 #9 | – | 4 #9 | – | #4 | S1 | 2@4", B@12" | EE | |
| | | | 30 | | | | | | | | | | 30 | | |

NOTE:

1. SEE TYPICAL POST-TENSIONED BEAM DETAIL ON S541.

18

## BEAM SCHEDULE

| MARK | SIZE: W | SIZE: D | REINFORCEMENT: BOTTOM BARS | TOP BARS: LE | TOP BARS: FL | TOP BARS: RE | STIRRUPS: SIZE | TYPE | SPACING | END | REMARKS |
|---|---|---|---|---|---|---|---|---|---|---|---|
| | | | | | | | | | | | 33 |
| GB1 | 42" | 36" | 5 #7 | – | 5 #7 | – | #4 | S1 | 2@4", B@12" | EE | 2 #5 SIDE EA FACE |
| | | | | | | | | | | | 34 |
| 1B1 | 24" | 30" | 4 #11 | 2 #9 | 3 #9 | – | #4 | S1 | 14@6", B@12" | EE | |
| 1B2 | 24" | 30" | 7 #11 | 4 #11 | 3 #10 | – | #4 | D1 | 10@8", B@12" | EE | |
| 1B3 | 24" | 30" | 5 #11 | 3 #10 | 3 #9 | – | #4 | S1 | 6@10", B@12" | EE | 19 |
| 1B4 | 20" | 24" | 4 #11 | – | 3 #7 | – | #4 | S1 | 2@4", B@10" | EE | PAVILION D |
| 1B5 | 10" | 18" | 2 #6 | – | 2 #5 | – | #3 | S1 | 2@4", B@7" | EE | 20 |
| 1B6 | 10" | 18" | 2 #7 | – | 2 #5 | – | #3 | S1 | 2@4", B@7" | EE | |
| 1B7 | 24" | 30" | 4 #11 | 2 #9 | 3 #7 | 2 #9 | #4 | S1 | 2@4", B@12" | EE | 1 #5 SIDE EA FACE |
| 1B8 | 24" | 30" | 4 #10 | – | 4 #7 | – | #4 | S1 | 2@4", B@12" | EE | 1 #5 SIDE EA FACE |
| 1B9 | 24" | 24" | 5 #11 | – | 4 #8 | – | #4 | S1 | 2@4", B@7" | EE | 1 #5 SIDE EA FACE |
| 1B10 | 24" | 18" | 4 #7 | – | 4 #6 | – | #4 | S1 | 2@4", B@7" | EE | |
| 1B11 | 24" | 18" | 6 #10 | – | 4 #10 | – | #4 | S1 | 2@4", B@6" | EE | |
| 1B12 | 24" | 18" | 5 #10 | – | 4 #9 | – | #4 | S1 | 2@4", B@7" | EE | |
| 1B13 | 24" | 18" | 4 #8 | – | 4 #8 | – | #4 | S1 | 2@4", B@7" | EE | |
| 1B14 | 24" | 18" | 3 #8 | – | 3 #8 | – | #4 | S2 | 2@4", B@7" | EE | 1 #5 SIDE EA FACE |
| 1B15 | 24" | 30" | 5 #8 | – | 7 #10 | – | #4 | S1 | 2@4", B@6" | EE | 1 #5 SIDE EA FACE; SEE 7/S525; TAPERED BEAM 34 |
| 1B16 | 24" | 30" | 5 #8 | – | 5 #8 | – | #4 | S1 | 2@4", B@12" | EE | 1 #5 SIDE EA FACE |
| 1B17 | 24" | 18" | 5 #10 | – | – | 4 #8 | #4 | S1 | 2@4", B@7" | EE | |
| | | | | | | | | | | | 36 |
| 2B1 | 24" | 23" | 3 #10 | – | 3 #8 | – | #4 | S1 | 2@4", B@10" | EE | |
| 2B2 | 30" | 23"/35" | 6 #10 | – | 4 #9 | – | #4 | S1 | 2@4", B@10" | EE | |
| 2B3 | 28" | 23" | 4 #8 | – | 4 #7 | – | #4 | S1 | 2@4", B@10" | EE | |
| 2B4 | 30" | 23" | 4 #8 | – | 4 #7 | – | #4 | S1 | 5@5", B@10" | EE | |
| 2B5 | 28" | 23" | 4 #10 | – | 4 #8 | – | #4 | S1 | 2@4", B@10" | EE | |
| 2B6 | 28" | 23" | 5 #10 | – | 5 #8 | – | #4 | S1 | 2@4", B@10" | EE | |
| 2B7 | 30" | 23"/35" | 6 #11 | – | 6 #8 | – | #4 | S1 | 2@4", B@8" | EE | |
| 2B8 | 24" | 30" | 4 #11 | 2 #9 | 3 #9 | – | #4 | S1 | 14@6", B@12" | EE | |
| 2B9 | 20" | 23" | 3 #8 | – | 3 #7 | – | #4 | S1 | 2@4", B@10" | EE | |
| 2B10 | 20" | 20" | 4 #9 | – | 3 #6 | – | #4 | S1 | 2@4", B@8" | EE | PAVILION D |
| 2B11 | 20" | 20" | 4 #10 | – | 3 #6 | – | #4 | S1 | 2@4", B@8" | EE | PAVILION D |
| 2B12 | 22" | 20"/32" | 3 #10 | 3 #6 | – | 3 #8 | #4 | S1 | 2@4", B@8" | EE | PAVILION D |
| 2B13 | 22" | 20" | 3 #10 | – | – | 3 #6 | #4 | S1 | 2@4", B@8" | EE | PAVILION D |
| 2B14 | 24" | 30" | 4 #11 | 2 #9 | 3 #7 | 2 #9 | #4 | S1 | 2@4", B@12" | EE | 1 #5 SIDE EA FACE |
| 2B15 | 10" | 18" | 2 #6 | – | 2 #5 | – | #3 | S1 | 2@4", B@7" | EE | |
| 2B16 | 24" | 18" | 4 #7 | – | 4 #5 | – | #4 | S1 | 2@4", B@7" | EE | |
| 2B17 | 24" | 24" | 4 #9 | – | 4 #7 | – | #4 | S2 | 2@4", B@10" | EE | 3 #9 SIDE EA FACE; ALL BARS EPOXY COATED 34 |
| 2B18 | 24" | 24" | 4 #9 | – | 4 #9 | – | #4 | S1 | 2@4", B@10" | EE | |
| 2B19 | 24" | 24" | 4 #8 | – | 4 #8 | – | #4 | S2 | 2@4", B@10" | EE | 1 #5 SIDE EA FACE; ALL BARS EPOXY COATED |
| 2B20 | 24" | 43" | 4 #9 | – | 4 #9 | – | #4 | S1 | 2@4", B@12" | EE | 2 #5 SIDE EA FACE |
| | | | | | | | | | | | 37 |
| 3B1 | 20" | 20" | 4 #9 | – | 3 #6 | – | #4 | S1 | 2@4", B@8" | EE | PAVILION D |
| 3B2 | 20" | 20" | 4 #10 | – | 3 #6 | – | #4 | S1 | 2@4", B@8" | EE | PAVILION D |
| | | | | | | | | | | | 26 |
| TYP B1 | 12" | 16" | 2 #6 | – | 3 #6 | – | #4 | S1 | 2@4", B@12" | EE | |
| | | | | | | | | | | | 20 |
| RB1 | 20" | 20" | 3 #9 | – | 3 #6 | – | #4 | S1 | 2@4", B@8" | EE | PAVILION D |
| | | | | | | | | | | | |
| PHB1 | 24" | 24" | 4 #9 | – | 4 #9 | – | #4 | S1 | 1@4", B@12" | EE | |
| PHB2 | 24" | 36" | 7 #9 | 4 #9 | – | 6 #9 | #4 | S1 | 1@4", B@12" | EE | |
| PHB3 | 24" | 36" | 3 #9 | – | 6 #9 | – | #4 | S1 | 1@4", B@12" | EE | |
| PHB4 | 16" | 16" | 2 #6 | – | 3 #6 | – | #4 | S1 | 1@4", B@12" | EE | |
| PHB5 | 16" | 16" | 2 #6 | – | 3 #6 | – | #4 | S1 | 1@4", B@12" | EE | |
| PHB6 | 16" | 16" | 2 #6 | – | 3 #6 | – | #4 | S1 | 1@4", B@12" | EE | |
| 62 PHB7 | 16" | 24" | 4 #8 | – | 4 #8 | – | #4 | S2 | 1@4", B@12" | EE | ALL BARS EPOXY COATED |
| PHB8 | 12" | 16" | 2 #6 | – | 3 #6 | – | #4 | S1 | 2@4", B@12 | EE | 62 |
| PHB9 | 12" | 16" | 2 #6 | – | 3 #6 | – | #4 | S1 | 2@4", B@12" | EE | |
| PHB10 | – | – | – | – | – | – | – | – | – | – | NOT USED |
| PHB11 | VARIES | 24" | 4 #9 | – | 4 #9 | – | #4 | S1 | 1@4", B@12" | EE | SEE 7/S524 20 |
| 62 | | | | | | | | | 30 | | |

NOTE:

1. SEE TYPICAL BEAM DETAIL ON S531.

PROPERTY OF THE UNITED STATES GOVERNMENT – FOR OFFICIAL USE ONLY. Do not remove this notice. Properly destroy documents when no longer needed.

GSA
GENERAL SERVICES ADMINISTRATION
77 FORSYTH STREET
SUITE 600
ATLANTA, GA 30303
TEL: (404)331-3200

AFRH The Premier Retirement Community for America's Veterans
JACOBS
PROJECT MANAGEMENT CONSULTANT TO THE GENERAL SERVICES ADMINISTRATION

YATES CONSTRUCTION

SFCS Architecture Engineering Planning Interiors

URS
URS CORPORATION
2020 K ST, NW
SUITE 300
WASHINGTON D.C. 20006

CERTIFICATIONS

DISTRICT OF COLUMBIA
MARK W. ZIMPELMAN
8572
REGISTERED
PROFESSIONAL ENGINEER
01/09/09

KEY PLAN

REVISION NOTES

| MARK | DATE | DESCRIPTION |
|---|---|---|
| 0 | 03/25/08 | FIRST FLOOR SLAB SUBMISSION |
| | 03/25/08 | ISSUED FOR CONSTRUCTION |
| 18 | 05/09/08 | LEVEL 2 SLAB – PENETRATIONS |
| 20 | 06/02/08 | LEVEL 3 SLAB & PENETRATIONS |
| 26 | 06/20/08 | PENTHOUSE, PH ROOF & PAV D SLABS |
| 1 | 07/21/08 | REVISED POUR STRIP LOCATION |
| 3 | 07/25/08 | ADD PILE CAP DETAILS |
| 4 | 08/18/08 | REVISED ENTRY & LOADING DOCK |
| 5 | 08/29/08 | ENTRY CANOPY |
| 7 | 09/08/08 | RE-ISSUED FOR CONSTRUCTION |
| 62 | 01/09/09 | PENTHOUSE & STEEL REDESIGN |

DRAWING SCALE

CONTRACTORS

| | |
|---|---|
| A/E CON. NO. | GS-04P-07-EX-C-0099 |
| A/E TASK NO. | |
| CONS. CONTR. | |
| CONS. WORK | |
| PRIME A/E | |
| SUB A/E | |
| CONSTR. CON. | |

BUILDING

| | |
|---|---|
| NAME | ARMED FORCES RETIREMENT HOME |
| STREET | 1800 BEACH DRIVE |
| CITY/ST./ZIP | GULFPORT, MS 39507 |
| BUILDING NO. | |
| OTHER BUILDING NOs. | |
| FACILITY CODE | |

PROJECT

| | |
|---|---|
| PROJECT TITLE | ARMED FORCES RETIREMENT HOME GULFPORT, MISSISSIPPI |
| PROJECT DESCRIPTION | NEW CONSTRUCTION |
| PROJECT NO. | 31942982 |
| GSA PM | STEVEN SMITH |
| SUBMISSION | ISSUED FOR CONSTRUCTION |
| SUB. DATE | 09/08/2008 |

DRAWING

| | |
|---|---|
| DRAWING TITLE | ONE-WAY SLAB & BEAM SCHEDULES |
| FILE NAME | S-611-N0095730.DWG |
| FLOOR NO. | 00 |
| DRAWN BY | JVS DATE DRAFTED: |
| CHECKED BY | MWZ SHEET SIZE: 34 X 44 |
| DRAWING NO. | 0 S 6 11 (DISCIPLINE SHEET TYPE SEQUENCE) |
| | SHEET 000 OF 000 |

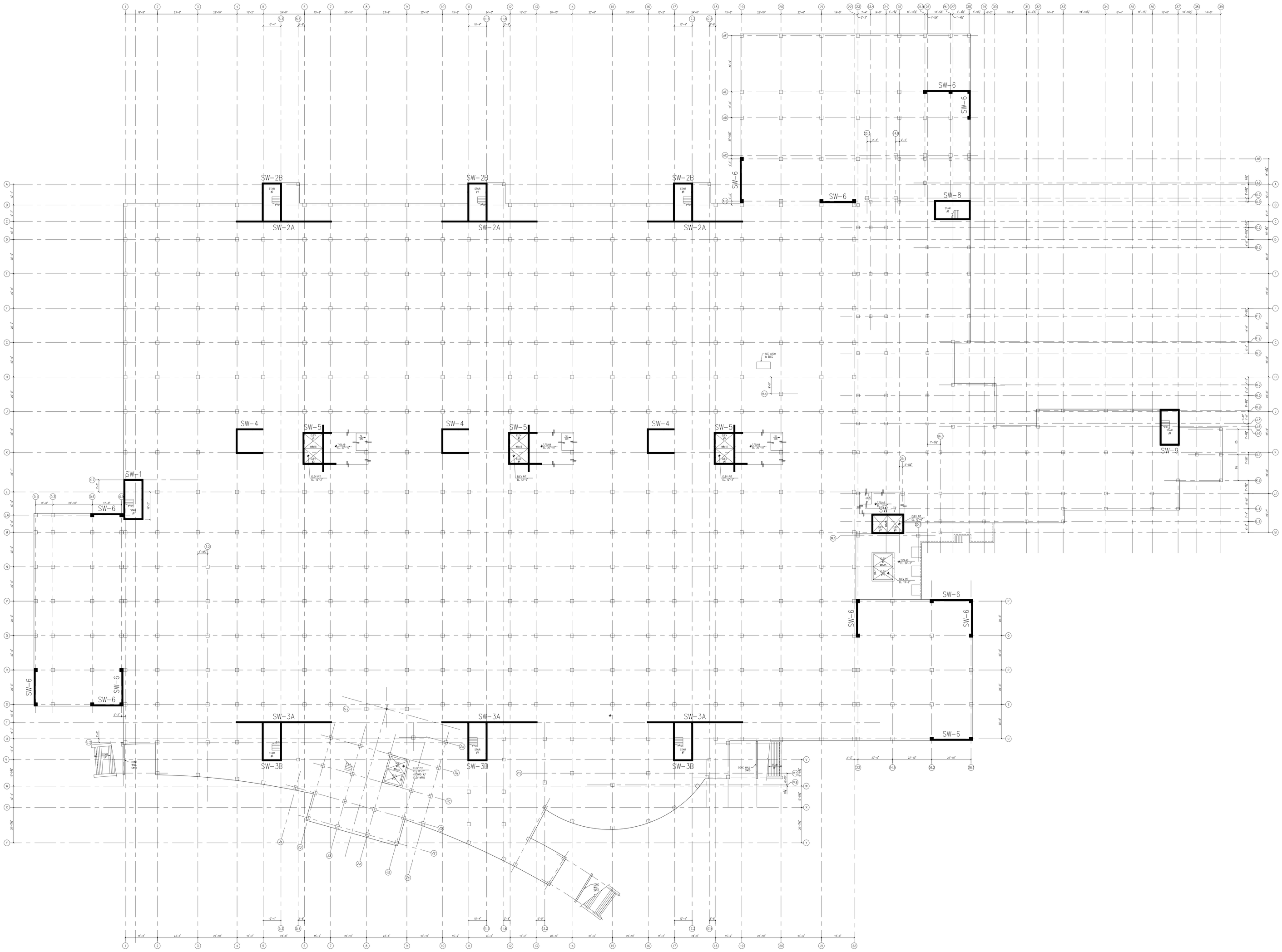


1 S700 **SHEAR WALL KEY PLAN**
1" = 20'-0"

PROPERTY OF THE UNITED STATES GOVERNMENT – FOR OFFICIAL USE ONLY. Do not remove this notice. Properly destroy documents when no longer needed.

GSA
GENERAL SERVICES ADMINISTRATION
77 FORSYTH STREET
SUITE 600
ATLANTA, GA 30303
TEL: (404)331-3200

AFRH The Premier Retirement Community for America's Veterans

JACOBS
PROJECT MANAGEMENT CONSULTANT TO THE GENERAL SERVICES ADMINISTRATION

YATES CONSTRUCTION

SFCS Architecture Engineering Planning Interiors

URS
URS CORPORATION
2020 K ST, NW
SUITE 300
WASHINGTON D.C. 20006

ISSUED FOR CONSTRUCTION

CERTIFICATIONS

DISTRICT OF COLUMBIA
MARK W. ZIMPFLEAN
8572
REGISTERED PROFESSIONAL ENGINEER
09/08/08

KEY PLAN

N

REVISION NOTES

| MARK | DATE | DESCRIPTION |
|---|---|---|
| 22 | 06/05/08 | SHEAR WALL KEY PLAN & SCHED |
| | 06/05/08 | ISSUED FOR CONSTRUCTION |
| 37 | 09/08/08 | RE-ISSUED FOR CONSTRUCTION |

GRAPHIC SCALE

CONTRACT INFO

| | |
|---|---|
| A/E CON. NO. | GS-04P-07-EX-C-0099 |
| A/E TASK NO. | |
| CONS. CONTR. | |
| CONS. WORK | |
| PRIME A/E | |
| SUB A/E | |
| CONSTR. CON. | |

BUILDING

| | |
|---|---|
| NAME | ARMED FORCES RETIREMENT HOME |
| STREET | 1800 BEACH DRIVE |
| CITY/ST./ZIP | GULFPORT, MS 39507 |
| BUILDING NO. | |
| OTHER BUILDING NOs. | |
| FACILITY CODE | |

PROJ DESC

| | |
|---|---|
| PROJECT TITLE | ARMED FORCES RETIREMENT HOME GULFPORT, MISSISSIPPI |
| PROJECT DESCRIPTION | NEW CONSTRUCTION |
| PROJECT NO. | 31942982 |
| GSA PM | STEVEN SMITH |
| SUBMISSION | ISSUED FOR CONSTRUCTION |
| SUB. DATE | 09/08/2008 |

DRAWING

| | |
|---|---|
| DRAWING TITLE | SHEAR WALL KEY PLAN |
| FILE NAME | S-700-N0095730.DWG |
| FLOOR NO. | 00 |
| DRAWN BY | JVS DATE DRAFTED: |
| CHECKED BY | MWZ SHEET SIZE: 34 X 44 |
| DRAWING NO. | 22 S 7 00 |
| | DISCIPLINE SHEET TYPE SEQUENCE |
| | SHEET 000 OF 000 |

## SHEAR WALL SCHEDULE

| LEVEL / WALL MARK | | SW-1 | SW-2A | SW-2B | SW-3A | SW-3B | SW-4 | SW-5 | SW-6 | SW-7 | SW-8 | SW-9 | SW-10 | SW-11 |
|---|---|---|---|---|---|---|---|---|---|---|---|---|---|---|
| PH ROOF | | | | | | | | | | | | | | |
| ROOF/ PH FL | THICKNESS | | 10" | 10" | | | | 10" | | | | | | |
| | VERT BARS | | #4 @ 12" | #4 @ 12" | | | | #4 @ 12" | | | | | | |
| | HORIZ BARS | | #4 @ 12" | #4 @ 12" | | | | #4 @ 12" | | | | | | |
| | REMARKS | | – | #5 @ 12" (HWW) | | | | – | | | | | | |
| LEVEL EIGHT | THICKNESS | | 10" | 10" | 10" | 10" | 10" | 10" | | | | | | |
| | VERT BARS | | #4 @ 12" | #4 @ 12" | #4 @ 12" | #4 @ 12" | #4 @ 12" | #4 @ 12" | | | | | | |
| | HORIZ BARS | | #4 @ 12" | #4 @ 12", UNO | #4 @ 12" | #4 @ 12", UNO | #4 @ 12" | #4 @ 12" | | | | | | |
| | REMARKS | | – | #5 @ 12" (HWW) | – | #5 @ 12" (HWW) | – | (SEE NOTE 9) | | | | | | |
| LEVEL SEVEN | THICKNESS | | 10" | 10" | 10" | 10" | 10" | 10" | | | | | | |
| | VERT BARS | | #4 @ 12" | #4 @ 12" | #4 @ 12" | #4 @ 12" | #4 @ 12" | #4 @ 12" | | | | | | |
| | HORIZ BARS | | #4 @ 12" | #4 @ 12", UNO | #4 @ 12" | #4 @ 12", UNO | #4 @ 12" | #4 @ 12" | | | | | | |
| | REMARKS | | – | #5 @ 12" (HWW) | – | #5 @ 12" (HWW) | – | (SEE NOTE 9) | | | | | | |
| LEVEL SIX | THICKNESS | | 10" | 10" | 10" | 10" | 10" | 10" | | | | | | |
| | VERT BARS | | #4 @ 12" | #4 @ 12" | #4 @ 12" | #4 @ 12" | #4 @ 12" | #4 @ 12" | | | | | | |
| | HORIZ BARS | | #4 @ 12" | #4 @ 12", UNO | #4 @ 12" | #4 @ 12", UNO | #4 @ 12" | #4 @ 12" | | | | | | |
| | REMARKS | | – | #5 @ 12" (HWW) | – | #5 @ 12" (HWW) | – | (SEE NOTE 9) | | | | | | |
| LEVEL FIVE | THICKNESS | | 10" | 10" | 10" | 10" | 10" | 10" | | | | | | |
| | VERT BARS | | #4 @ 12" | #4 @ 12" | #4 @ 12" | #4 @ 12" | #4 @ 12" | #4 @ 12" | | | | | | |
| | HORIZ BARS | | #4 @ 12" | #4 @ 12", UNO | #4 @ 12" | #4 @ 12", UNO | #4 @ 12" | #4 @ 12" | | | | | | |
| | REMARKS | | – | #5 @ 12" (HWW) | – | #5 @ 12" (HWW) | – | (SEE NOTE 9) | | | | | | |
| LEVEL FOUR | THICKNESS | | 10" | 10" | 10" | 10" | 10" | 10" | | | | | | |
| | VERT BARS | | #5 @ 12" | #5 @ 12" | #5 @ 12" | #5 @ 12" | #5 @ 12" | #5 @ 12" | | | | | | |
| | HORIZ BARS | | #4 @ 12" | #4 @ 12", UNO | #4 @ 12" | #4 @ 12", UNO | #4 @ 12" | #4 @ 12" | | | | | | |
| | REMARKS | | – | #5 @ 12" (HWW) | – | #5 @ 12" (HWW) | – | (SEE NOTE 9) | | | | | | |
| LEVEL THREE | THICKNESS | | 10" | 10" | 10" | 10" | 10" | 10" | | 10" | 10" | 10" | | |
| | VERT BARS | | #6 @ 12" | #6 @ 12" | #6 @ 12" | #6 @ 12" | #5 @ 12" | #5 @ 12" | | #4 @ 12" | #4 @ 12" | #4 @ 12" | | |
| | HORIZ BARS | | #4 @ 12" | #4 @ 12", UNO | #4 @ 12" | #4 @ 12", UNO | #4 @ 12" | #4 @ 12" | | #4 @ 12" | #4 @ 12" | #4 @ 12" | | |
| | REMARKS | | – | #5 @ 12" (HWW) | – | #5 @ 12" (HWW) | – | (SEE NOTE 9) | | – | – | – | | |
| LEVEL TWO | THICKNESS | 10" | 10" | 10" | 10" | 10" | 10" | 10" | | 10" | 10" | 10" | | |
| | VERT BARS | #4 @ 12" | #7 @ 9" | #7 @ 12" | #7 @ 12" | #7 @ 12" | #6 @ 12" | #6 @ 12" | | #5 @ 12" | #4 @ 12" | #4 @ 12" | | |
| | HORIZ BARS | #4 @ 12" | #5 @ 12" | #5 @ 12" | #5 @ 12" | #5 @ 12" | #4 @ 12" | #4 @ 12" | | #4 @ 12" | #4 @ 12" | #4 @ 12" | | |
| | REMARKS | – | – | – | – | – | – | (SEE NOTE 9) | | – | – | – | | |
| LEVEL ONE | THICKNESS | 10" | 10" | 10" | 10" | 10" | 10" | 10" | 10" | 10" | 10" | 10" | | 10" |
| | VERT BARS | #5 @ 12" | #7 @ 9" | #7 @ 12" | #7 @ 12" | #7 @ 12" | #6 @ 12" | #6 @ 12" | #5 @ 12" | #7 @ 12" | #5 @ 12" | #5 @ 12" | | #4 @ 12" |
| | HORIZ BARS | #4 @ 12" | #5 @ 8" | #5 @ 12" | #5 @ 8" | #5 @ 12" | #4 @ 12" | #4 @ 12" | #4 @ 12" | #5 @ 12" | #4 @ 12" | #4 @ 12" | | #4 @ 12" |
| | REMARKS | – | – | – | – | – | – | (SEE NOTE 9) | (SEE 5&6/S523) | – | – | – | | – |
| GARAGE LEVEL | THICKNESS | 10" | 10" | 10" | 10" | 10" | 10" | 10" | 10" | 10" | 10" | 10" | 10" | 10" |
| | VERT BARS | #5 @ 12" | #7 @ 9" | #7 @ 9" | #7 @ 9" | #7 @ 9" | #7 @ 12" | #7 @ 12" | #5 @ 12" | #8 @ 9" | #7 @ 12" | #7 @ 12" | #4 @ 12" | #4 @ 12" |
| | HORIZ BARS | #4 @ 12" | #4 @ 9" | #4 @ 9" | #4 @ 9" | #4 @ 9" | #4 @ 10" | #4 @ 10" | #4 @ 12" | #5 @ 12" | #4 @ 12" | #4 @ 12" | #4 @ 12" | #4 @ 12" |
| | REMARKS | – | (SEE 11/S609) | (SEE 10/S609) | (SEE 11/S609) | (SEE 10/S609) | (SEE 12/S609) | (SEE 12/S609) | (SEE 9/S609) | (SEE 14/S609) | (SEE 13/S609) | (SEE 13/S609) | – | – |

NOTES:
1. VERTICAL AND HORIZONTAL BARS ARE EACH FACE (EF).
2. DOWELS TO MATCH VERTICAL BARS, UNO.
3. (HWW) DENOTES HORIZONTAL REINFORCEMENT IN WEST WALL ONLY.
4. PROVIDE TENSION LAP SPLICE FOR ALL VERTICAL AND HORIZONTAL BARS IN WALLS. REFER TO S-001 FOR TENSION LAP SPLICE TABLES.
5. REFER TO ARCHITECTURAL DRAWINGS FOR LOCATION OF ALL WALL OPENINGS. VERIFY ROUGH DOOR OPENING SIZES WITH DOOR MANUFACTURER PRIOR TO PREPARATION OF REBAR SHOP DRAWINGS.
6. REPLACE ALL VERTICAL AND HORIZONTAL BARS INTERRUPTED BY WALL OPENINGS WITH ADDITIONAL REINFORCING EQUAL TO AMOUNT OF REINFORCING INTERRUPTED; PLACE 50% OF ADDITIONAL BARS ON EACH SIDE OF OPENING AND EXTEND ENDS OF BARS AT LEAST THE MINIMUM DEVELOPMENT LENGTH BEYOND THE EDGE OF THE OPENING, UNO. PROVIDE A MINIMUM OF 2 #6 TRIM BARS ALONG SIDES AND TOP OF DOOR OPENINGS.
7. PROVIDE #3 U-BAR HAIRPINS ALL WALL OPENINGS; SPACING TO MATCH SCHEDULED HORIZONTAL BAR SPACING.
8. PROVIDE 2 #4 x 4'-0" LONG DIAGONAL BARS AT CORNERS OF WALL OPENINGS.
9. PROVIDE MINIMUM 4 #6 VERTICAL BARS AND #3 AT 10" TIES IN WALL PIERS.

PROPERTY OF THE UNITED STATES GOVERNMENT – FOR OFFICIAL USE ONLY. Do not remove this notice. Properly destroy documents when no longer needed.

GENERAL SERVICES ADMINISTRATION
77 FORSYTH STREET
SUITE 600
ATLANTA, GA 30303
TEL: (404)331-3200

JACOBS
PROJECT MANAGEMENT CONSULTANT TO THE GENERAL SERVICES ADMINISTRATION

YATES CONSTRUCTION

SFCS Architecture Engineering Planning Interiors

URS CORPORATION
2020 K ST, NW
SUITE 300
WASHINGTON D.C. 20006

ISSUED FOR CONSTRUCTION

CERTIFICATIONS

DISTRICT OF COLUMBIA
MARK W. ZIMPELMAN
8572
REGISTERED PROFESSIONAL ENGINEER
09/08/08

KEY PLAN

REVISION NOTES

| MARK | DATE | DESCRIPTION |
|---|---|---|
| 2 | 06/05/08 | SHEAR WALL KEY PLAN & SCHED |
| | 06/05/08 | ISSUED FOR CONSTRUCTION |
| 3 | 07/21/08 | REVISED POUR STRIP LOCATION |
| 4 | 07/25/08 | ADD PILE CAP DETAILS |
| 5 | 09/08/08 | RE-ISSUED FOR CONSTRUCTION |

GRAPHIC SCALE

CONTRACTORS

| | |
|---|---|
| A/E CON. NO. | GS-04P-07-EX-C-0099 |
| A/E TASK NO. | |
| CONS. CONTR. | |
| CONS. WORK | |
| PRIME A/E | |
| SUB A/E | |
| CONSTR. CON. | |

BUILDING

| | |
|---|---|
| NAME | ARMED FORCES RETIREMENT HOME |
| STREET | 1800 BEACH DRIVE |
| CITY/ST./ZIP | GULFPORT, MS 39507 |
| BUILDING NO. | |
| OTHER BUILDING NOs. | |
| FACILITY CODE | |

PROJECT

| | |
|---|---|
| PROJECT TITLE | ARMED FORCES RETIREMENT HOME GULFPORT, MISSISSIPPI |
| PROJECT DESCRIPTION | NEW CONSTRUCTION |
| PROJECT NO. | 31942982 |
| GSA PM | STEVEN SMITH |
| SUBMISSION | ISSUED FOR CONSTRUCTION |
| SUB. DATE | 09/08/2008 |

DRAWING

| | |
|---|---|
| DRAWING TITLE | SHEAR WALL SCHEDULE |
| FILE NAME | S-701-N0095730.DWG |
| FLOOR NO. | 00 |
| DRAWN BY | JVS DATE DRAFTED: |
| CHECKED BY | MWZ SHEET SIZE: 34 X 44 |
| DRAWING NO. | 2 S 7 01 |
| | DISCIPLINE SHEET TYPE SEQUENCE |
| | SHEET 000 OF 000 |

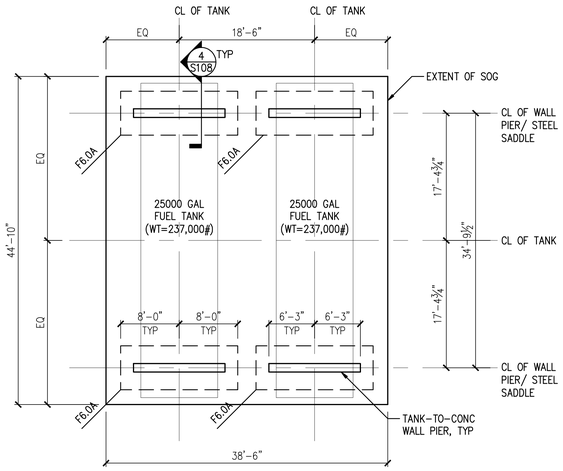


## 1 S108 FUEL STORAGE TANK FOUNDATION PLAN

1/8" = 1'-0"

PLAN NOTES:

1. T/FOOTING EL. 14.00'.
2. CENTER ALL FOOTINGS ON CENTERLINE OF WALL PIERS, UNO.
3. COORDINATE ALL EXISTING AND NEW UNDERGROUND UTILITIES WITH CIVIL AND MEP DRAWINGS.
4. T/SLAB EL, 19.00', UNO.
5. SLAB CONSTRUCTION CONSISTS OF 5" THICK CONCRETE SLAB-ON-GRADE WITH 6x6-W2.0xW2.0 WELDED WIRE FABRIC ON GRANULAR BASE.
6. SEE S511 FOR SLAB-ON-GRADE TYPICAL DETAILS.
7. SEE ARCH DRAWINGS FOR METAL STAIR DETAILS.
8. SEE CIVIL DRAWINGS FOR LOCATION ON SITE.

DESIGN BASIS:

1. TANK OPERATIONAL PROCEDURAL INSTRUCTIONS SHALL CLEARLY STATE THAT THE FUEL TANKS SHALL BE AT FULL CAPACITY BEFORE HURRICANE EVENT. FLUID LEVEL INSIDE BOTH TANKS SHALL BE MAINTAINED AT HIGHER ELEVATION THAN FLOOD/SURGE ELEVATION OUTSIDE TANK. AS A RESULT, TANK FOUNDATION WILL NOT BE SUBJECTED TO UPLIFT FORCE (BUOYANCY) ON TANK.

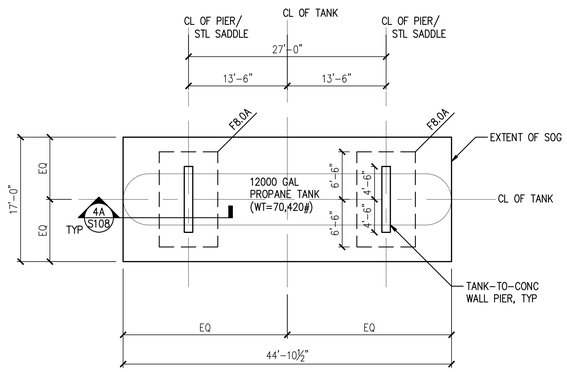


## 2 S108 PROPANE TANK TANK FOUNDATION PLAN

1/8" = 1'-0"

PLAN NOTES:

1. T/FOOTING EL. 13.40'.
2. CENTER ALL FOOTINGS ON CENTERLINE OF WALL PIERS, UNO.
3. COORDINATE ALL EXISTING AND NEW UNDERGROUND UTILITIES WITH CIVIL AND MEP DRAWINGS.
4. T/SLAB EL, 18.40', UNO.
5. SLAB CONSTRUCTION CONSISTS OF 5" THICK CONCRETE SLAB-ON-GRADE WITH 6x6-W2.0xW2.0 WELDED WIRE FABRIC ON GRANULAR BASE.
6. SEE S511 FOR SLAB-ON-GRADE TYPICAL DETAILS.
7. SEE ARCH DRAWINGS FOR METAL STAIR DETAILS.
8. SEE CIVIL DRAWINGS FOR LOCATION ON SITE.

DESIGN BASIS:

1. TANK OPERATIONAL PROCEDURAL INSTRUCTIONS SHALL CLEARLY STATE THAT THE PROPANE TANK SHALL BE AT FULL CAPACITY BEFORE HURRICANE EVENT. AS A RESULT, FOUNDATION IS DESIGNED TO ONLY RESIST UPLIFT FORCE (BUOYANCY) ON TANK WHICH IS IN EXCESS OF SPECIFIED TOTAL WEIGHT OF TANK AND FLUID.

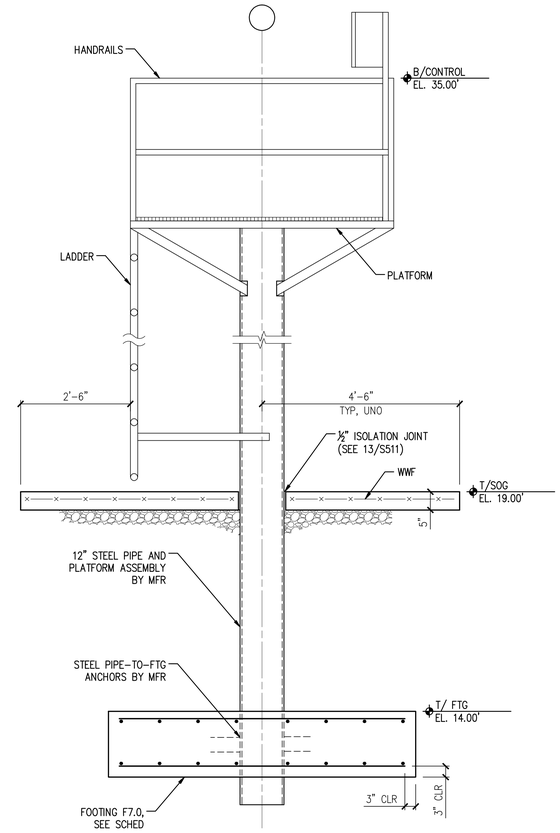


## 3 S108 ELEVATED PUMP FOOTING DETAIL

3/4" = 1'-0"

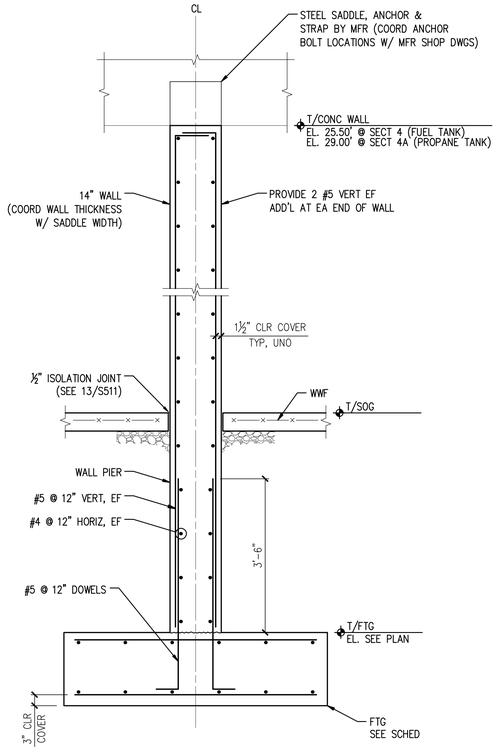


## 4 S108 / 4A S108 SECTION

3/4" = 1'-0"

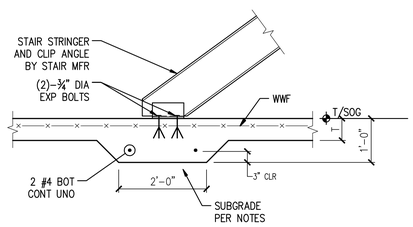


## 5 S108 TYP THICKENED SLAB DETAIL AT METAL STAIR

N.T.S.

**FOOTING SCHEDULE ($q_{net}$ = 2500 PSF)**

| MARK | SIZE | DEPTH | REINF EA WAY | REMARKS |
|---|---|---|---|---|
| | | | | |
| F6.0A | 6'-0"x16'-0" | 20" | 16 #6 T&B (SHORT)<br>6 #6 T&B (LONG) | |
| F7.0 | 7'-0"x7'-0" | 18" | 8 #6 T&B | 12" DIA STL THRU FTG BY WELL PUMP MFR |
| F8.0A | 8'-0"x13'-0" | 24" | 12 #7 T&B (SHORT)<br>7 #7 T&B (LONG | |
| | | | | |
| | | | | |

PROPERTY OF THE UNITED STATES GOVERNMENT – FOR OFFICIAL USE ONLY. Do not remove this notice. Properly destroy documents when no longer needed.

GSA
GENERAL SERVICES ADMINISTRATION
77 FORSYTH STREET
SUITE 600
ATLANTA, GA 30303
TEL: (404)331-3200

AFRH The Premier Retirement Community for America's Veterans
JE JACOBS
PROJECT MANAGEMENT CONSULTANT TO THE GENERAL SERVICES ADMINISTRATION

YATES CONSTRUCTION

SFCS Architecture Engineering Planning Interiors

URS
URS CORPORATION
2020 K ST, NW
SUITE 300
WASHINGTON D.C. 20006

ISSUED FOR CONSTRUCTION

CERTIFICATIONS

DISTRICT OF COLUMBIA
MARK W. ZIMPELMAN
8572
REGISTERED PROFESSIONAL ENGINEER
06/05/09

KEY PLAN

REVISION NOTES

| MARK | DATE | DESCRIPTION |
|---|---|---|
| | | |

GRAPHIC SCALE

| | |
|---|---|
| A/E CON. NO. | GS-04P-07-EX-C-0099 |
| A/E TASK NO. | |
| CONS. CONTR. | |
| CONS. WORK | |
| PRIME A/E | |
| SUB A/E | |
| CONSTR. CON. | |
| NAME | ARMED FORCES RETIREMENT HOME |
| STREET | 1800 BEACH DRIVE |
| CITY/ST./ZIP | GULFPORT, MS 39507 |
| BUILDING NO. | |
| OTHER BUILDING NOs. | |
| FACILITY CODE | |
| PROJECT TITLE | ARMED FORCES RETIREMENT HOME GULFPORT, MISSISSIPPI |
| PROJECT DESCRIPTION | NEW CONSTRUCTION |
| PROJECT NO. | 31942982 |
| GSA PM | STEVEN SMITH |
| SUBMISSION | ISSUED FOR CONSTRUCTION |
| SUB. DATE | 09/08/2008 |
| DRAWING TITLE | FUEL TANK, PROPANE TANK FOUNDATION |
| FILE NAME | S-108-N0095730.DWG |
| FLOOR NO. | 00 |
| DRAWN BY | JVS DATE DRAFTED: |
| CHECKED BY | MWZ SHEET SIZE: 34 X 44 |
| DRAWING NO. | SD S 069 |
| | DISCIPLINE SHEET TYPE SEQUENCE |
| | SHEET 000 OF 000 |

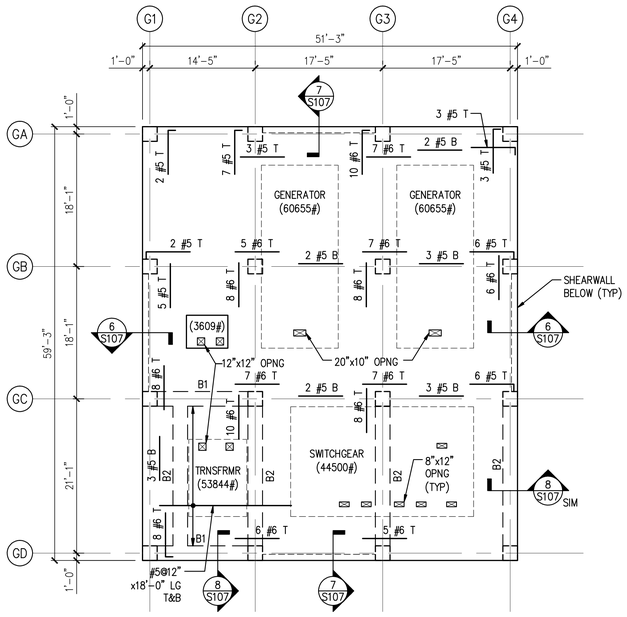


## 2 S107 GENERATOR PLATFORM FRAMING PLAN

1/8" = 1'-0"

PLAN NOTES:

1. T/SLAB EL. 35'-0", UNO.
2. TYPICAL FLOOR CONSTRUCTION CONSISTS OF 11" THICK TWO-WAY REINFORCED CONCRETE FLAT SLAB, UNO.
3. PROVIDE EPOXY COATED BARS FOR ALL SLABS AND BEAMS.
4. TWO-WAY SLAB REINFORCEMENT:
   - PROVIDE BOTTOM MAT OF CONTINUOUS REINFORCMENT CONSISTING OF #5 @ 12" B EACH WAY. ADDITIONAL BOTTOM BARS (IF ANY) ARE INDICATED ON THE PLAN.
   - PROVIDE TOP MAT OF CONTINUOUS REINFORCEMENT CONSISTING #5 @ 12" T EACH WAY. ADDITIONAL TOP BARS (IF ANY) ARE INDICATED ON THE PLAN.
   - ALL REINFORCEMENT ON PLAN IS IN ADDITION TO THE TOP AND BOTTOM MATS OF REINFORCEMENT.
5. SLAB REINF IN NORTH-SOUTH DIRECTION SHALL BE OUTERMOST LAYERS OF TOP AND BOTTOM BARS. SLAB REINF IN EAST-WEST DIRECTION SHALL BE INNERMOST LAYERS OF TOP AND BOTTOM BARS.
6. CENTER ALL BEAMS ON GRIDLINES, UNO.
7. COORDINATE SIZE AND LOCATION OF ALL EQUIPMENT, OPENINGS, SLEEVES, DRAINS, CURBS, PADS, EMBEDS, INSERTS, ETC WITH ARCH & MEP DRAWINGS.
8. SEE S501 FOR COLUMN TYPICAL DETAILS.
9. SEE S521 FOR SLAB TYPICAL DETAILS.
10. SEE S531 FOR BEAM TYPICAL DETAILS.
11. SEE ARCH DRAWINGS FOR METAL STAIR AND GUARDRAIL DETAILS.

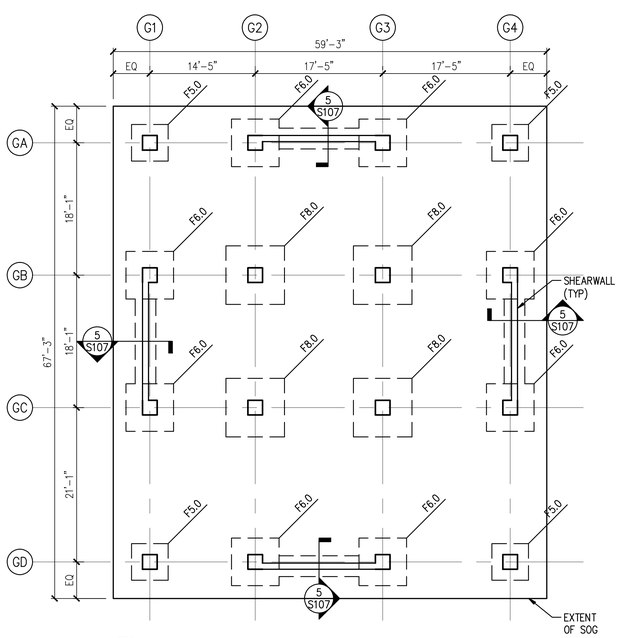


## 1 S107 GENERATOR PLATFORM FOUNDATION PLAN

1/8" = 1'-0"

PLAN NOTES:

1. T/FOOTING EL. 13.40'. T/WALL FOOTING TO MATCH TOP OF ADJACENT FOOTING ELEVATION, UNO.
2. CENTER ALL FOOTINGS AND COLUMNS ON GRIDLINES, UNO.
3. COORDINATE ALL EXISTING AND NEW UNDERGROUND UTILITIES WITH CIVIL AND MEP DRAWINGS.
4. T/SLAB EL. 19.00', UNO.
5. SLAB CONSTRUCTION CONSISTS OF 5" THICK CONCRETE SLAB-ON-GRADE WITH 6x6-W2.0xW2.0 WELDED WIRE FABRIC ON GRANULAR BASE.
6. SEE S501 FOR COLUMN TYPICAL DETAILS.
7. SEE S511 FOR SLAB-ON-GRADE TYPICAL DETAILS.
8. SEE ARCH DRAWINGS FOR METAL STAIR DETAILS.
9. SEE ELECT DWGS FOR CONDUIT RISER CONCRETE ENCLOSURE LOCATIONS AND DETAILS.

**FOOTING SCHEDULE ($q_{net}$ = 2500 PSF)**

| MARK | SIZE | DEPTH | REINF EA WAY | REMARKS |
|---|---|---|---|---|
| | | | | |
| F5.0 | 5'-0"x5'-0" | 16" | 6 #5 T&B | |
| F6.0 | 6'-0"x6'-0" | 16" | 7 #5 T&B | |
| F8.0 | 8'-0"x8'-0" | 18" | 7 #6 T&B | |
| | | | | |
| | | | | |

**COLUMN SCHEDULE (f'c = 5000 PSI)**

| LEVEL \ COLUMN MARK | | TYP INT COL | TYP EXT COL | – | – |
|---|---|---|---|---|---|
| LEVEL ONE | SIZE | | | | |
| | REINF | | | | |
| | TIES | | | | |
| | TYPE | | | | |
| GARAGE LEVEL | SIZE | 24"x24" | 24"x24" | – | – |
| | REINF | 8 #8 | 8 #8 | – | – |
| | TIES | #3 @ 10" | #3 @ 10" | – | – |
| | TYPE | T2 | T2 | – | – |
| DOWELS | | 8 #8 | 8 #8 | – | – |
| REMARKS | | – | – | – | – |
| FOUNDATION SERVICE LOAD (k) | | 156 | 83 | – | – |

NOTE:

1. SEE S501 FOR COLUMN TYPICAL DETAILS.

**BEAM SCHEDULE (f'c = 5000 PSI)**

| MARK | SIZE | | REINFORCEMENT | | | | STIRRUPS | | | | REMARKS |
|---|---|---|---|---|---|---|---|---|---|---|---|
| | W | D | BOTTOM BARS | TOP BARS | | | SIZE | TYPE | SPACING | END | |
| | | | | LE | FL | RE | | | | | |
| | | | | | | | | | | | |
| B1 | 24 | 24 | 5 #9 | – | 4 #7 | – | #4 | S1 | 2@4", B@10" | EE | DEVELOP TOP BARS INTO ADJACENT SLAB |
| B2 | 24 | 24 | 6 #11 | – | 4 #7 | – | #4 | S1 | 2@4", B@10" | EE | DEVELOP TOP BARS INTO ADJACENT SLAB |
| | | | | | | | | | | | |
| | | | | | | | | | | | |
| | | | | | | | | | | | |

NOTES:

1. SEE S531 FOR BEAM TYPICAL DETAILS.
2. PROVIDE EPOXY COATED BARS FOR ALL BEAMS.

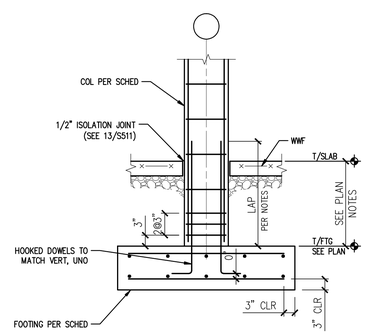


## 3 S107 TYP CONCRETE COLUMN FOOTING DETAIL

N.T.S

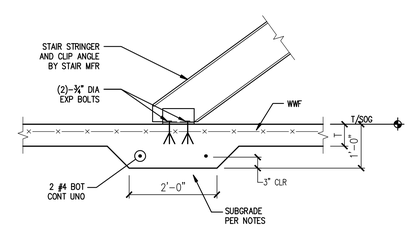


## 4 S107 TYP THICKENED SLAB DETAIL AT METAL STAIR

N.T.S.

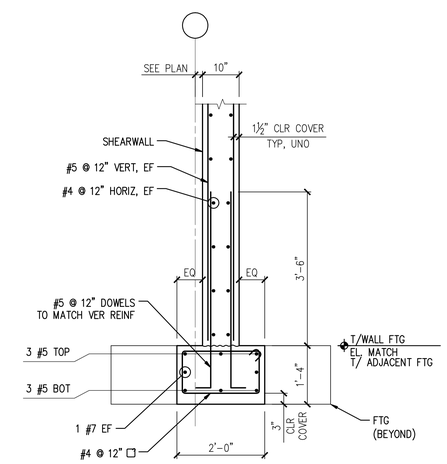


## 5 S107 SECTION

3/4" = 1'-0"

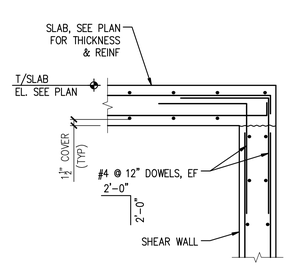


## 6 S107 SECTION

3/4" = 1'-0"

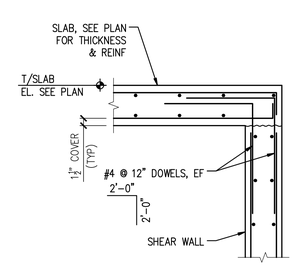


## 7 S107 SECTION

3/4" = 1'-0"

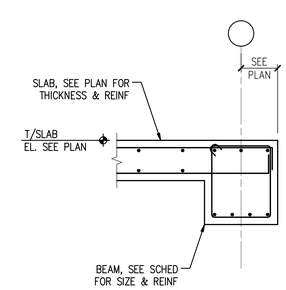


## 8 S107 SECTION

3/4" = 1'-0"

PROPERTY OF THE UNITED STATES GOVERNMENT – FOR OFFICIAL USE ONLY. Do not remove this notice. Properly destroy documents when no longer needed.

GSA
GENERAL SERVICES ADMINISTRATION
77 FORSYTH STREET
SUITE 600
ATLANTA, GA 30303
TEL: (404)331-3200

AFRH The Premier Retirement Community for America's Veterans
JACOBS
PROJECT MANAGEMENT CONSULTANT TO THE GENERAL SERVICES ADMINISTRATION

YATES CONSTRUCTION

SFCS Architecture Engineering Planning Interiors

URS
URS CORPORATION
2020 K ST, NW
SUITE 300
WASHINGTON D.C. 20006

CERTIFICATIONS

DISTRICT OF COLUMBIA
MARK W. ZIMFREMAN
8572
REGISTERED PROFESSIONAL ENGINEER
04/29/09

KEY PLAN

REVISION NOTES

| MARK | DATE | DESCRIPTION |
|---|---|---|
| | | |

GRAPHIC SCALE

CONTRACTORS

| | |
|---|---|
| A/E CON. NO. | GS-04P-07-EX-C-0099 |
| A/E TASK NO. | |
| CONS. CONTR. | |
| CONS. WORK | |
| PRIME A/E | |
| SUB A/E | |
| CONSTR. CON. | |

BUILDING

| | |
|---|---|
| NAME | ARMED FORCES RETIREMENT HOME |
| STREET | 1800 BEACH DRIVE |
| CITY/ST./ZIP | GULFPORT, MS 39507 |
| BUILDING NO. | |
| OTHER BUILDING NOs. | |
| FACILITY CODE | |

PROJECT

| | |
|---|---|
| PROJECT TITLE | ARMED FORCES RETIREMENT HOME GULFPORT, MISSISSIPPI |
| PROJECT DESCRIPTION | NEW CONSTRUCTION |
| PROJECT NO. | 31942982 |
| GSA PM | STEVEN SMITH |
| SUBMISSION | ISSUED FOR CONSTRUCTION |
| SUB. DATE | 09/08/2008 |

DRAWING

| | |
|---|---|
| DRAWING TITLE | GENERATOR PLATFORM PLANS & DETAILS |
| FILE NAME | S-107-N0095730.DWG |
| FLOOR NO. | 00 |
| DRAWN BY | JVS DATE DRAFTED: |
| CHECKED BY | MWZ SHEET SIZE: 34 X 44 |
| DRAWING NO. | SD S 603 |
| | DISCIPLINE SHEET TYPE SEQUENCE |
| | SHEET 000 OF 000 |