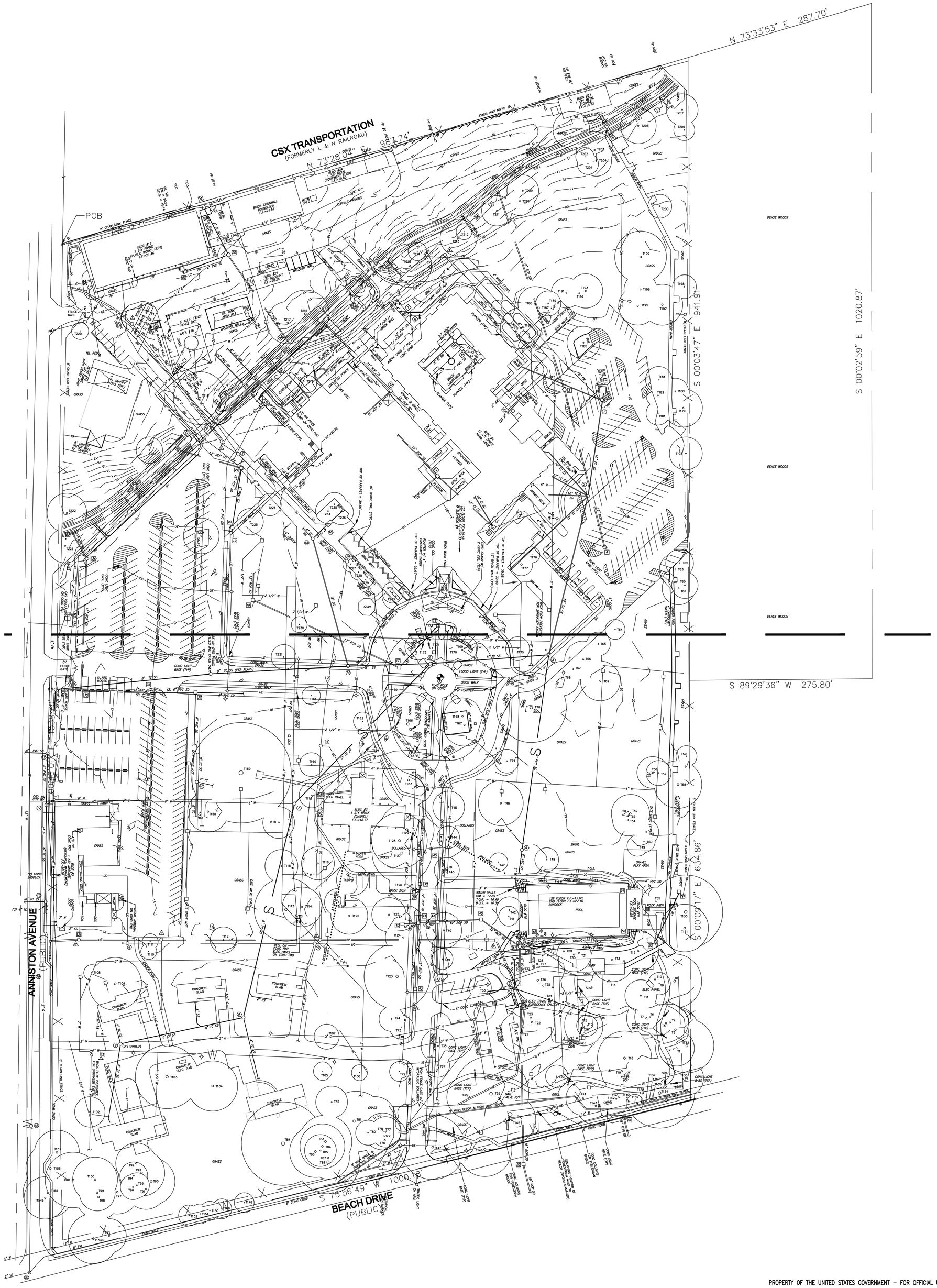

EXISTING LEGEND:

CONTOUR LINE	20
STORM DRAIN (SD)	12" SD
SANITARY SEWER (SS)	12" SS
SANITARY FORCE MAIN (FM)	12" FM
TOP OF BANK	T.O.B.
TOE OF SLOPE	T.O.S.
UNDERGROUND COMMUNICATION	UC
UNDERGROUND ELECTRIC	UE
OVERHEAD POWER	OH
UNDERGROUND GAS	2" G
UNDERGROUND WATER MAIN	6" W
UNDERGROUND UNKNOWN LINE	UNK
SIGN	
SIGN	
CURB STOP	
BOLLARD	
LIGHT POLE	
LIGHT POLE	
LIGHT POLE	
POWER POLE	
TELEPHONE PEDESTAL	TEL PED
TELEPHONE MANHOLE	TEL MH
TRANSFORMER PAD	
GUY WIRE	
FENCE	X
GUARDRAIL	
TREE	T101
FIRE HYDRANT	FH
WATER METER	WM
WATER VALVE	WV
POST INDICATOR VALVE	PIV
WATER MANHOLE	WATER MH
GAS VALVE	GV
GAS METER	GM
FORCE MAIN VALVE (FM)	FMV
SANITARY CLEAN OUT	SCO
LIFT STATION	
SANITARY SEWER MANHOLE	SS MH
DROP INLET	DI
STORM DRAIN MANHOLE	SD MH
BENCH MARK	
UNKNOWN	UNK
NOT FOUND	N/F
BOTTOM OF STRUCTURE	B.O.S.
FINISHED FLOOR ELEVATION	F.F. = 20.36
CAST IRON	CI
DUCTILE IRON	DI
REINFORCED CONCRETE PIPE	RCP
TERRA-COTTA	TC
POLYVINYL CHLORIDE	PVC

LEGAL DESCRIPTION

A parcel of land situated and being located in the Southwest ¼ of Section 32, Township 7 South, Range 10 West, City of Gulfport, First Judicial District of Harrison County, Mississippi and being more particularly described as follows, to-wit:

Commencing at an iron rod at the Northwest corner of the Southwest 1/4 of Section 32, Township 7 South, Range 10 West, Gulfport, First Judicial District of Harrison County, Mississippi, said point having Mississippi State Plane Coordinates of Northing 324215.3632 Easting 925894.6184, Mississippi State Plane Coordinate System. East Zone, N.A.D. 83, said corner also shown on Plat of Cowan Homes Annex Subdivision, Unit 1, as recorded in Plat Book 20, at Page 21, thence S 01°08'50" W 994.11 feet to an iron rod at the intersection of the South margin of the CSX Railroad and the East margin of Anniston Avenue, said point also being the Point of Beginning and having Mississippi State Plane Coordinates of Northing 323221.4502 Easting 925874.7129 per Mississippi State Plane Coordinate System, East Zone, N.A.D. 83, thence N 73°28'04" E along said South margin of CSX Railroad 987.74 feet to an iron rod, thence N 73°33'53" E along said South margin of CSX Railroad 287.70 feet to an iron rod, thence S 00°02'59" E 1020.87 feet to an iron rod, thence S 89°29'36" W 275.80 feet to an iron rod, thence S 00°09'17" E 634.86 feet to an iron rod on the North margin of U.S. Highway 90 service road, thence S 75°56'49" W 1000.18 feet along said North margin of said service drive to a PK nail in the asphalt at the intersection of said North margin of U.S. Highway 90 service road and the East margin of Anniston Avenue, thence N 00°46'01" E 1538.70 feet along said east margin of Anniston Avenue to the South margin of CSX Railroad and the Point of Beginning. Said parcel contains 40.43 acres.

This is to CERTIFY that this map or plat and the survey on which it is based were made in accordance with "Minimum Standards for Land Surveying in the State of Mississippi".

J. MICHAEL CASSADY, PS
Dated: June 21, 2007

CLASS "B" SURVEY

FOR INFORMATIONAL PURPOSES ONLY

60 0 60 120
SCALE 1"=60'

PROPERTY OF THE UNITED STATES GOVERNMENT – FOR OFFICIAL USE ONLY. Do not remove this notice. Properly destroy documents when no longer needed.

GSA
GENERAL SERVICES ADMINISTRATION
77 FORSYTH STREET
SUITE 600
ATLANTA, GA 30303
TEL: (404)331-3200

AFRH The Premier Retirement Community for America's Veterans
JACOBS
PROJECT MANAGEMENT CONSULTANT TO THE GENERAL SERVICES ADMINISTRATION

YATES CONSTRUCTION

SFCS Architecture Engineering Planning Interiors

URS
URS CORPORATION
2020 K ST, NW
SUITE 300
WASHINGTON D.C. 20006

ISSUED FOR CONSTRUCTION

CERTIFICATIONS

KEY PLAN

REVISION NOTES

MARK	DATE	DESCRIPTION
1	09/08/08	ISSUED FOR CONSTRUCTION

DRAWING SCALE

CONTRACTORS

A/E CON. NO.	GS-04P-07-EX-C-0099
A/E TASK NO.	
CONS. CONTR.	
CONS. WORK	
PRIME A/E	
SUB A/E	
CONSTR. CON.	

BUILDING

NAME	ARMED FORCES RETIREMENT HOME
STREET	1800 BEACH DRIVE
CITY/ST./ZIP	GULFPORT, MS 39507
BUILDING NO.	
OTHER	
BUILDING NOs.	
FACILITY CODE	

PROJECT

PROJECT TITLE	ARMED FORCES RETIREMENT HOME GULFPORT, MISSISSIPPI
PROJECT DESCRIPTION	NEW CONSTRUCTION
PROJECT NO.	31942982
GSA PM	STEVEN SMITH
SUBMISSION	ISSUED FOR CONSTRUCTION
SUB. DATE	09/08/2008

DRAWING

DRAWING TITLE	EXISTING CONDITIONS PLAN
FILE NAME	
FLOOR NO.	
DRAWN BY	DATE DRAFTED:
CHECKED BY	SHEET SIZE: 34 X 44
DRAWING NO.	C 1 01 (DISCIPLINE SHEET TYPE SEQUENCE)
	SHEET OF

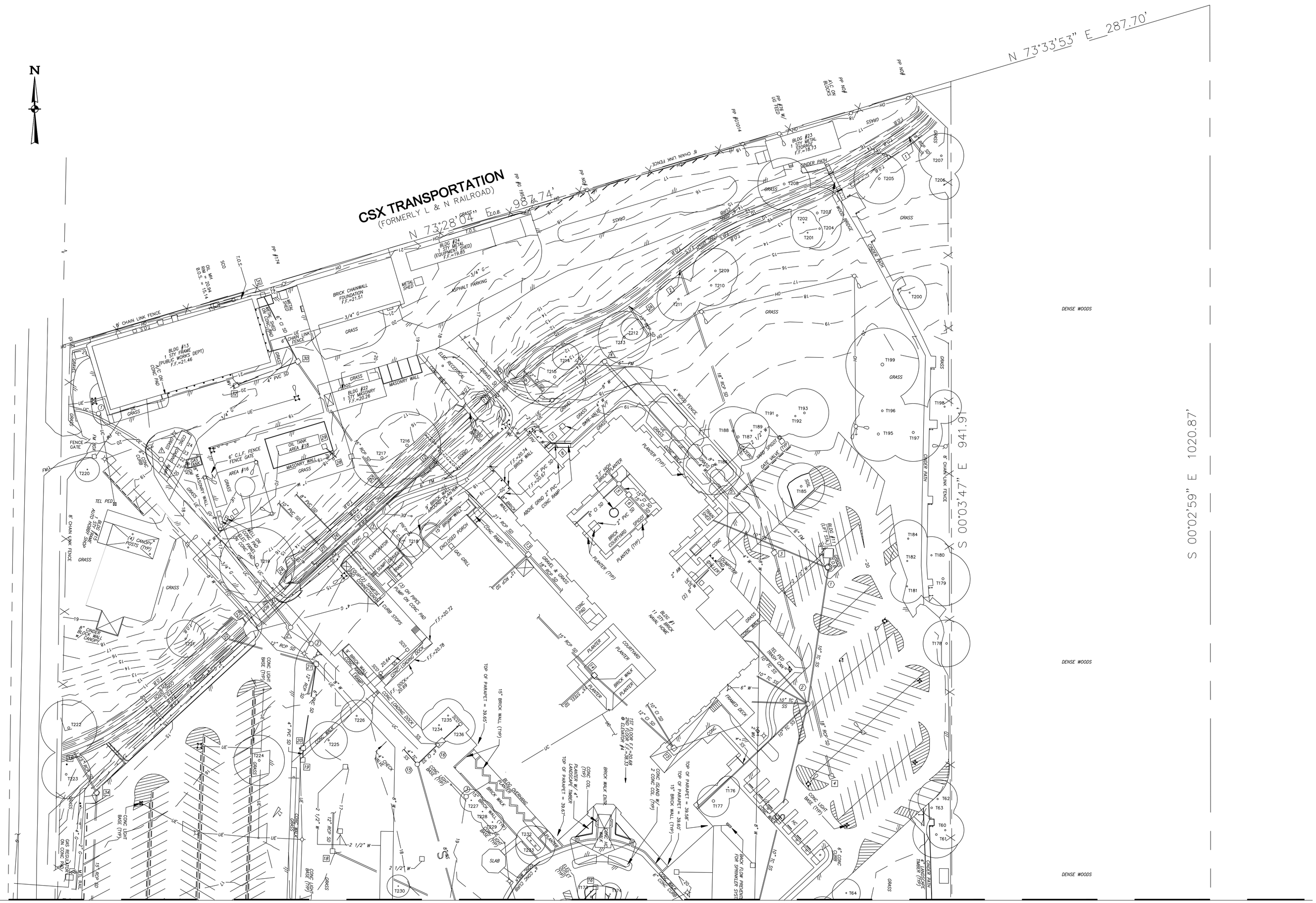

EXISTING LEGEND:

CONTOUR LINE	20
STORM DRAIN (SD)	12" SD
SANITARY SEWER (SS)	12" SS
SANITARY FORCE MAIN (FM)	12" FM
TOP OF BANK	T.O.B.
TOE OF SLOPE	T.O.S.
UNDERGROUND COMMUNICATION	UC
UNDERGROUND ELECTRIC	UE
OVERHEAD POWER	OH
UNDERGROUND GAS	2" G
UNDERGROUND WATER MAIN	6" W
UNDERGROUND UNKNOWN LINE	UNK
SIGN	
SIGN	
CURB STOP	
BOLLARD	
LIGHT POLE	
LIGHT POLE	
LIGHT POLE	
POWER POLE	
TELEPHONE PEDESTAL	TEL PED
TELEPHONE MANHOLE	TEL MH
TRANSFORMER PAD	
GUY WIRE	
FENCE	X
GUARDRAIL	

TREE	T101
FIRE HYDRANT	FH
WATER METER	WM
WATER VALVE	WV
POST INDICATOR VALVE	PIV
WATER MANHOLE	WATER MH
GAS VALVE	GV
GAS METER	GM
FORCE MAIN VALVE (FM)	FMV
SANITARY CLEAN OUT	SCO
LIFT STATION	
SANITARY SEWER MANHOLE	SS MH
DROP INLET	DI
STORM DRAIN MANHOLE	SD MH
BENCH MARK	
UNKNOWN	UNK
NOT FOUND	N/F
BOTTOM OF STRUCTURE	B.O.S.
FINISHED FLOOR ELEVATION	F.F. = 20.36
CAST IRON	CI
DUCTILE IRON	DI
REINFORCED CONCRETE PIPE	RCP
TERRA-COTTA	TC
POLYVINYL CHLORIDE	PVC

FOR INFORMATIONAL PURPOSES ONLY

40 0 40 80

SCALE 1"=40'

PROPERTY OF THE UNITED STATES GOVERNMENT – FOR OFFICIAL USE ONLY. Do not remove this notice. Properly destroy documents when no longer needed.

GSA
GENERAL SERVICES ADMINISTRATION
77 FORSYTH STREET
SUITE 600
ATLANTA, GA 30303
TEL: (404)331-3200

AFRH The Premier Retirement Community for America's Veterans
JE JACOBS
PROJECT MANAGEMENT CONSULTANT TO THE GENERAL SERVICES ADMINISTRATION

YATES CONSTRUCTION

SFCS Architecture Engineering Planning Interiors

URS
URS CORPORATION
2020 K ST, NW
SUITE 300
WASHINGTON D.C. 20006

ISSUED FOR CONSTRUCTION

CERTIFICATIONS

KEY PLAN

REVISION NOTES

MARK	DATE	DESCRIPTION
1	09/08/08	ISSUED FOR CONSTRUCTION

GRAPHIC SCALE

CONTRACTORS

A/E CON. NO.	GS-04P-07-EX-C-0099
A/E TASK NO.	
CONS. CONTR.	
CONS. WORK	
PRIME A/E	
SUB A/E	
CONSTR. CON.	

BUILDING

NAME	ARMED FORCES RETIREMENT HOME
STREET	1800 BEACH DRIVE
CITY/ST./ZIP	GULFPORT, MS 39507
BUILDING NO.	
OTHER BUILDING NOs.	
FACILITY CODE	

PROJECT

PROJECT TITLE	ARMED FORCES RETIREMENT HOME GULFPORT, MISSISSIPPI
PROJECT DESCRIPTION	NEW CONSTRUCTION
PROJECT NO.	31942982
GSA PM	STEVEN SMITH
SUBMISSION	ISSUED FOR CONSTRUCTION
SUB. DATE	09/08/2008

DRAWING

DRAWING TITLE	EXISTING CONDITIONS PLAN
FILE NAME	
FLOOR NO.	
DRAWN BY	DATE DRAFTED:
CHECKED BY	SHEET SIZE: 34 X 44
DRAWING NO.	C 1 02 (DISCIPLINE SHEET TYPE SEQUENCE)
	SHEET OF

MATCHLINE SEE SHEET C-102

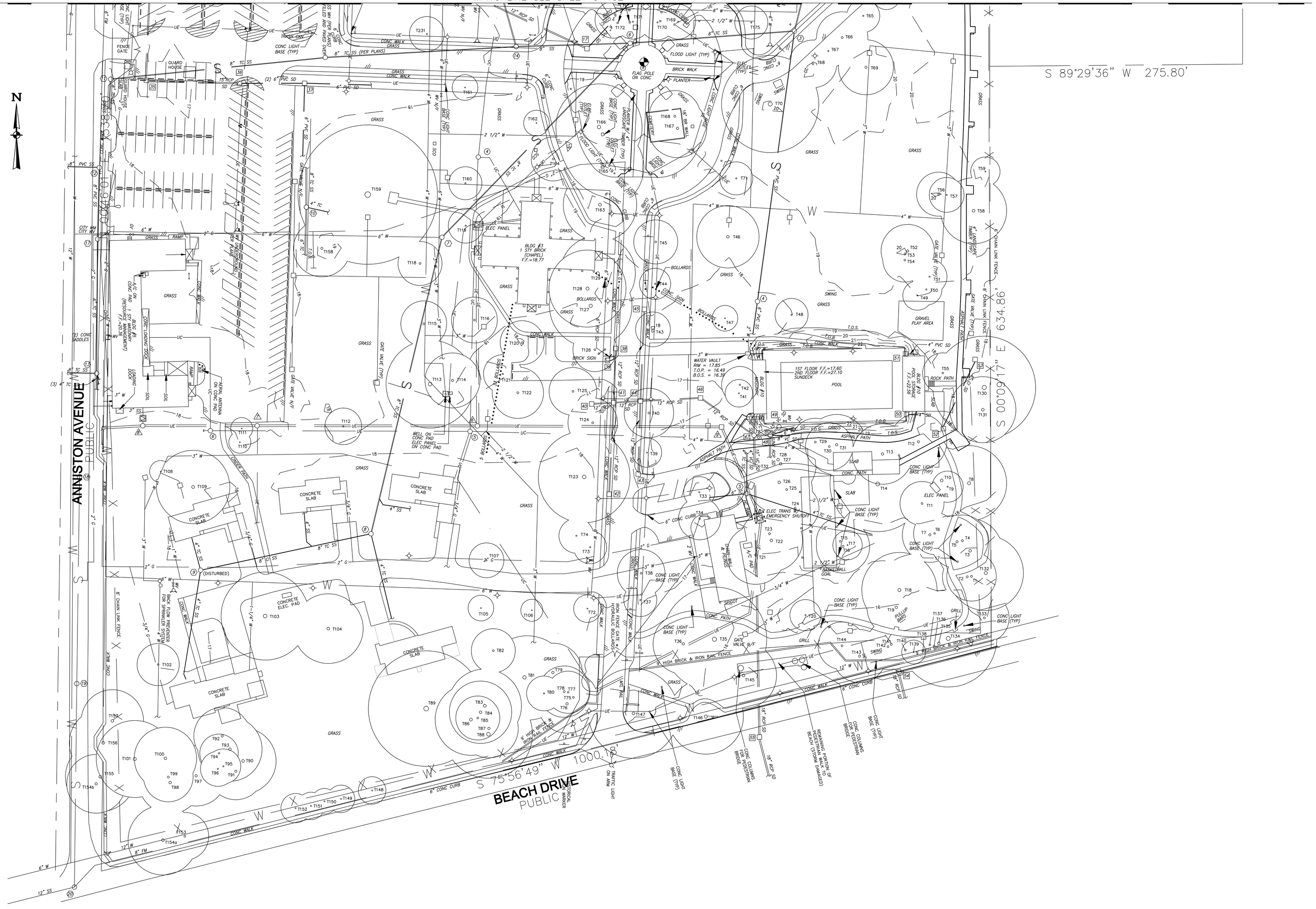

EXISTING LEGEND:

CONTOUR LINE	20
STORM DRAIN (SD)	12" SD
SANITARY SEWER (SS)	12" SS
SANITARY FORCE MAIN (FM)	12" FM
TOP OF BANK	T.O.B.
TOE OF SLOPE	T.O.S.
UNDERGROUND COMMUNICATION	UC
UNDERGROUND ELECTRIC	UE
OVERHEAD POWER	OH
UNDERGROUND GAS	2" G
UNDERGROUND WATER MAIN	6" W
UNDERGROUND UNKNOWN LINE	UNK
SIGN	
SIGN	
CURB STOP	
BOLLARD	
LIGHT POLE	
LIGHT POLE	
LIGHT POLE	
POWER POLE	
TELEPHONE PEDESTAL	TEL PED
TELEPHONE MANHOLE	TEL MH
TRANSFORMER PAD	
GUY WIRE	
FENCE	X
GUARDRAIL	
TREE	T101
FIRE HYDRANT	FH
WATER METER	WM
WATER VALVE	WV
POST INDICATOR VALVE	PIV
WATER MANHOLE	WATER MH
GAS VALVE	GV
GAS METER	GM
FORCE MAIN VALVE (FM)	FMV
SANITARY CLEAN OUT	SCO
LIFT STATION	
SANITARY SEWER MANHOLE	SS MH
DROP INLET	DI
STORM DRAIN MANHOLE	SD MH
BENCH MARK	
UNKNOWN	UNK
NOT FOUND	N/F
BOTTOM OF STRUCTURE	B.O.S.
FINISHED FLOOR ELEVATION	F.F. = 20.36
CAST IRON	CI
DUCTILE IRON	DI
REINFORCED CONCRETE PIPE	RCP
TERRA-COTTA	TC
POLYVINYL CHLORIDE	PVC

FOR INFORMATIONAL PURPOSES ONLY

40 0 40 80

SCALE 1"=40'

PROPERTY OF THE UNITED STATES GOVERNMENT – FOR OFFICIAL USE ONLY. Do not remove this notice. Properly destroy documents when no longer needed.

GENERAL SERVICES ADMINISTRATION
77 FORSYTH STREET
SUITE 600
ATLANTA, GA 30303
TEL: (404)331-3200

AFRH The Premier Retirement Community for America's Veterans

JACOBS
PROJECT MANAGEMENT CONSULTANT TO THE GENERAL SERVICES ADMINISTRATION

YATES CONSTRUCTION

SFCS Architecture Engineering Planning Interiors

URS CORPORATION
2020 K ST, NW
SUITE 300
WASHINGTON D.C. 20006

ISSUED FOR CONSTRUCTION

CERTIFICATIONS

KEY PLAN

REVISION NOTES

MARK	DATE	DESCRIPTION
A	09/08/08	ISSUED FOR CONSTRUCTION

GRAPHIC SCALE

CONTRACTORS	
A/E CON. NO.	GS-04P-07-EX-C-0099
A/E TASK NO.	
CONS. CONTR.	
CONS. WORK	
PRIME A/E	
SUB A/E	
CONSTR. CON.	

BUILDING	
NAME	ARMED FORCES RETIREMENT HOME
STREET	1800 BEACH DRIVE
CITY/ST./ZIP	GULFPORT, MS 39507
BUILDING NO.	
OTHER BUILDING NOs.	
FACILITY CODE	

PROJECT	
PROJECT TITLE	ARMED FORCES RETIREMENT HOME GULFPORT, MISSISSIPPI
PROJECT DESCRIPTION	NEW CONSTRUCTION
PROJECT NO.	31942982
GSA PM	STEVEN SMITH
SUBMISSION	ISSUED FOR CONSTRUCTION
SUB. DATE	09/08/2008

DRAWING	
DRAWING TITLE	EXISTING CONDITIONS PLAN
FILE NAME	
FLOOR NO.	
DRAWN BY	DATE DRAFTED:
CHECKED BY	SHEET SIZE: 34 X 44
DRAWING NO.	C 1 03 (DISCIPLINE SHEET TYPE SEQUENCE)
	SHEET OF

LEGEND:

- BUILDING DEMO (BY OTHERS)
- BUILDING & BUILDING FOUNDATION DEMO
- ROAD/PARKING LOT/AREA PAVING DEMO
- RESURFACE

DEMOLITION NOTES

1. THE FOLLOWING EXISTING STORM DRAIN CATCH BASINS AND RELATED PIPING ARE TO REMAIN: CATCH BASINS 30, 31, 32, 34, 35, 40, 41, 44, 45, 46, 47, 55.
2. ALL UNDERGROUND UTILITIES INCLUDING WATER, GAS, AND ELECTRIC NOT SHOWN LISTED IN NOTE 1 SHALL BE DISCONNECTED FROM SERVICE LINES AND ABANDONED IN PLACE. CATCH BASINS AND MANHOLES SHALL BE CUT A MINIMUM OF 1'-0" BELOW FINAL GRADE AND FILLED WITH CONCRETE.
3. DEMOLITION SHOWN INCLUDES: ACCESS ROADS, PARKING LOTS, CONCRETE WALKS, ANCILLARY BUILDING AND FOUNDATIONS, AND EQUIPMENT PADS AND FOUNDATIONS.
4. IT IS THE INTENT TO MAINTAIN AND KEEP AS MANY OF THE EXISTING TREES AS POSSIBLE. THE CONTRACTOR SHALL REMOVE ONLY THOSE EXISTING TREES THAT FALL WITHIN THE LIMITS OF CONSTRUCTION FOR THE NEW BUILDING AND ROADS.
5. AFTER CONSTRUCTION IS COMPLETED THE CONTRACTOR SHALL INSPECT AND VERIFY THAT ALL EXISTING UTILITIES SERVING BUILDINGS TO REMAIN ARE PROPERLY FUNCTIONING. OTHERWISE THEY SHALL BE REPAIRED BY THE CONTRACTOR AT NO ADDITIONAL COST TO THE GOVERNMENT.
6. ALL EXISTING UTILITIES CONNECTIONS TO CHAPEL TO REMAIN SHALL BE PROTECTED AGAINST EXCESSIVE LOADS AND TRAFFIC FROM CONSTRUCTION VEHICLES.
7. FLAG EXISTING CEMETARY TO REMAIN. TAKE ALL APPROPRIATE MEASURES TO PROTECT THE CEMETARY DURING CONSTRUCTION.
8. BACKFILL VOID REMAINING AFTER POOL REMOVAL WITH SATISFACTORY BORROW SOIL MATERIAL PER THE REQUIREMENTS OF SECTION 02300 – EARTHWORK. REFER TO DRAWING C301 SITE PLAN FOR FINAL GRADING. REFER TO LANDSCAPE DRAWINGS FOR SODDING/SEEDING REQUIREMENTS. NOT IN CONTRACT – RFP FOR DEMOLITION OF POOL ISSUED.
9. REMOVE EXCESS ITEMS ALONG WALKING PATH TO INCLUDE SIGNS, EXERCISE STATIONS, ETC.
10. ASPHALT RESURFACE – REMOVE 2" WEARING COURSE AND RESURFACE PROVIDED THAT CORING SAMPLES EVIDENCE ADEQUATE SUPPORT.

60 0 60 120

SCALE 1"=60'

PROPERTY OF THE UNITED STATES GOVERNMENT – FOR OFFICIAL USE ONLY. Do not remove this notice. Properly destroy documents when no longer needed.

GSA
GENERAL SERVICES ADMINISTRATION
77 FORSYTH STREET
SUITE 600
ATLANTA, GA 30303
TEL: (404)331-3200

AFRH The Premier Retirement Community for America's Veterans
JACOBS
PROJECT MANAGEMENT CONSULTANT TO THE GENERAL SERVICES ADMINISTRATION

YATES CONSTRUCTION

SFCS Architecture Engineering Planning Interiors

URS
URS CORPORATION
2020 K ST, NW
SUITE 300
WASHINGTON D.C. 20006

ISSUED FOR CONSTRUCTION

CERTIFICATIONS

KENNETH E. THOMAS REGISTERED PROFESSIONAL ENGINEER 0310 STATE OF MISSISSIPPI
12/9/08

KEY PLAN

REVISION NOTES

MARK	DATE	DESCRIPTION
2	09/08/08	ISSUED FOR CONSTRUCTION
3	12/02/08	CIVIL, STRUCTURAL, AND ARCHITECTURAL REVISIONS

GRAPHIC SCALE

CONTRACTORS

A/E CON. NO.	GS-04P-07-EX-C-0099
A/E TASK NO.	
CONS. CONTR.	
CONS. WORK	
PRIME A/E	
SUB A/E	
CONSTR. CON.	

BUILDING

NAME	ARMED FORCES RETIREMENT HOME
STREET	1800 BEACH DRIVE
CITY/ST./ZIP	GULFPORT, MS 39507
BUILDING NO.	
OTHER BUILDING NOs.	
FACILITY CODE	

PROJECT

PROJECT TITLE	ARMED FORCES RETIREMENT HOME GULFPORT, MISSISSIPPI
PROJECT DESCRIPTION	NEW CONSTRUCTION
PROJECT NO.	31942982
GSA PM	STEVEN SMITH
SUBMISSION	ISSUED FOR CONSTRUCTION
SUB. DATE	09/08/2008

DRAWING

DRAWING TITLE	DEMOLITION PLAN
FILE NAME	
FLOOR NO.	
DRAWN BY	DATE DRAFTED:
CHECKED BY	SHEET SIZE: 34 X 44
DRAWING NO.	C 2 01 (DISCIPLINE SHEET TYPE SEQUENCE)
	SHEET OF

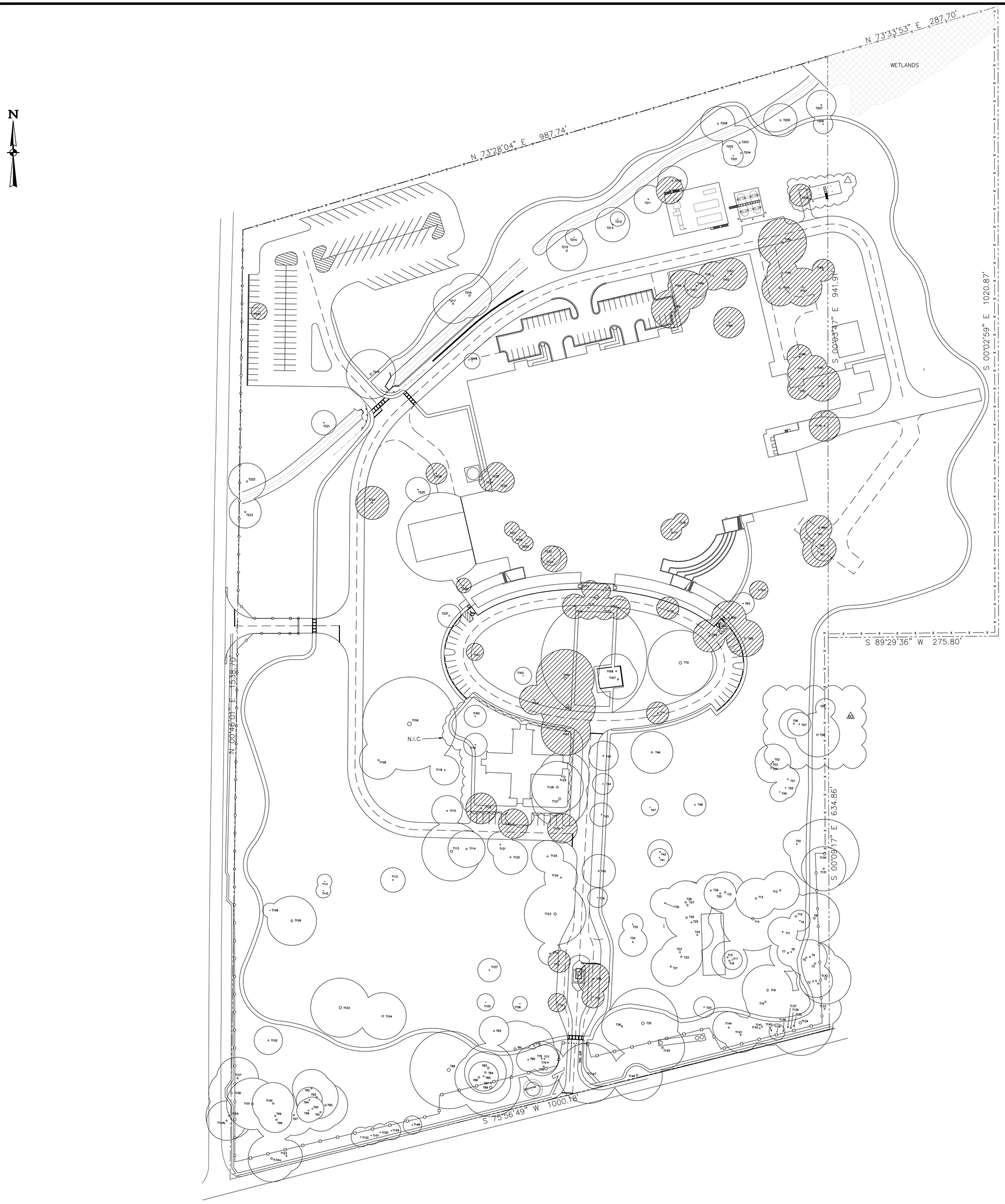

LEGEND:

TREES TO BE REMOVED

TREES TO REMAIN

60 0 60 120

SCALE 1"=60'

PROPERTY OF THE UNITED STATES GOVERNMENT – FOR OFFICIAL USE ONLY. Do not remove this notice. Properly destroy documents when no longer needed.

GSA
GENERAL SERVICES ADMINISTRATION
77 FORSYTH STREET
SUITE 600
ATLANTA, GA 30303
TEL: (404)331-3200

AFRH The Premier Retirement Community for America's Veterans

JACOBS
PROJECT MANAGEMENT CONSULTANT TO THE GENERAL SERVICES ADMINISTRATION

YATES CONSTRUCTION

SFCS Architecture Engineering Planning Interiors

URS
URS CORPORATION
2020 K ST, NW
SUITE 300
WASHINGTON D.C. 20006

ISSUED FOR CONSTRUCTION

CERTIFICATIONS

KENNETH E. THOMAS
REGISTERED PROFESSIONAL ENGINEER
STATE OF MISSISSIPPI
12/2/08

KEY PLAN

REVISION NOTES

MARK	DATE	DESCRIPTION
01	09/08/08	ISSUED FOR CONSTRUCTION
02	12/02/08	CIVIL, STRUCTURAL, AND ARCHITECTURAL REVISIONS

GRAPHIC SCALE

CONTRACTORS

A/E CON. NO.	GS-04P-07-EX-C-0099
A/E TASK NO.	
CONS. CONTR.	
CONS. WORK	
PRIME A/E	
SUB A/E	
CONSTR. CON.	

BUILDING

NAME	ARMED FORCES RETIREMENT HOME
STREET	1800 BEACH DRIVE
CITY/ST./ZIP	GULFPORT, MS 39507
BUILDING NO.	
OTHER BUILDING NOs.	
FACILITY CODE	

PROJECT

PROJECT TITLE	ARMED FORCES RETIREMENT HOME GULFPORT, MISSISSIPPI
PROJECT DESCRIPTION	NEW CONSTRUCTION
PROJECT NO.	31942982
GSA PM	STEVEN SMITH
SUBMISSION	ISSUED FOR CONSTRUCTION
SUB. DATE	09/08/2008

DRAWING

DRAWING TITLE	TREE REMOVAL PLAN
FILE NAME	
FLOOR NO.	
DRAWN BY	DATE DRAFTED:
CHECKED BY	SHEET SIZE: 34 X 44
DRAWING NO.	C 2 02 (DISCIPLINE SHEET TYPE SEQUENCE)

SHEET OF

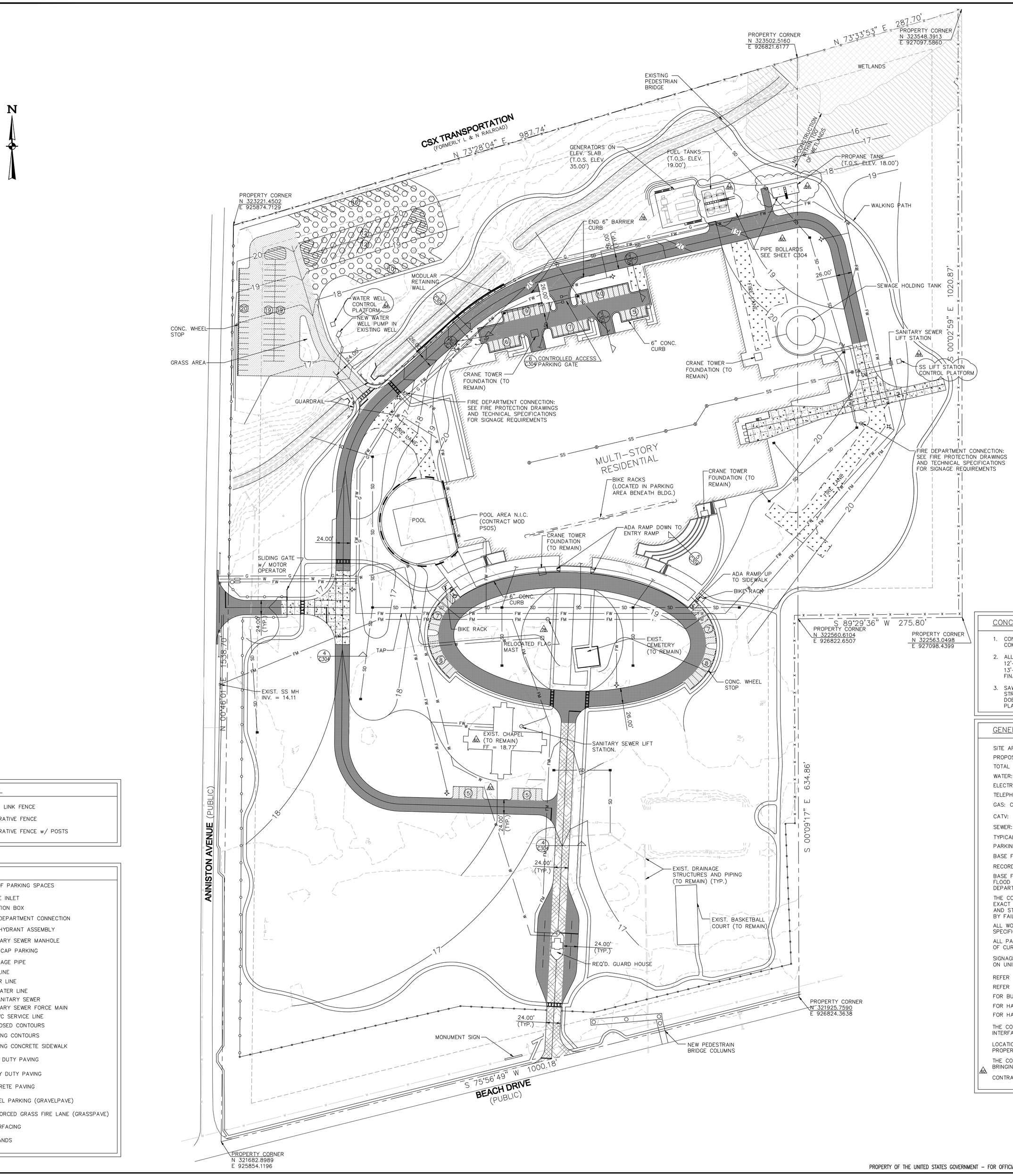

PARKING TABLE:

BENEATH BUILDING:	365
NORTH OF BLDG:	37
RV:	50
REMOTE:	58
VISITORS:	40
TOTAL SPACES:	550
TOTAL ADA REQ'D:	11
TOTAL PROVIDED:	11

CONCRETE PAVING NOTES:

1. CONCRETE SHALL BE NORMAL WEIGHT WITH A MINIMUM 4,000 PSI COMPRESSIVE STRENGTH AFTER 28 DAYS.
2. ALL JOINTS SHALL BE SAW-CUT. JOINT SPACING SHALL BE A MAXIMUM 12'-0"x12'-0" O.C. EACH WAY FOR 24'-0" WIDTH ROADS AND 13'-0"x13'-0" O.C. FOR 26'-0" WIDTH ROADS. CONTRACTOR SHALL SUBMIT FINAL SAW-CUT JOINT PLAN TO ENGINEER FOR APPROVAL.
3. SAWING SHALL BEGIN AS SOON AS CONCRETE HAS REACHED SUFFICIENT STRENGTH TO SUPPORT SAWING EQUIPMENT AND SPALLING OF CONCRETE DOES NOT OCCUR. SAWING SHALL BE COMPLETED WITH IN 10 HOURS OF PLACING CONCRETE.

GENERAL NOTES:

SITE AREA: 41 ACRES

PROPOSED USE: MULTI-STORY RESIDENTIAL

TOTAL BUILDING AREA: 198525 S.F. (FOOTPRINT AREA)

WATER: CITY OF GULFPORT

ELECTRIC: MISSISSIPPI POWER CO.

TELEPHONE: AT&T

GAS: CENTER POINT ENERGY

CATV: CABLE ONE

SEWER: CITY OF GULFPORT

TYPICAL PARKING STALLS: 9'x18' RV/STALL: 30'x10'

PARKING AREA: ASPHALT PAVEMENT

BASE FLOOD ELEVATION: 13.00'

RECORD INUNDATION: 13.00'

BASE FLOOD ELEVATIONS ARE SUBJECT TO CHANGE AND THE CURRENT BASE FLOOD ELEVATION SHOULD BE VERIFIED WITH THE ENGINEERING DIVISION OF THE DEPARTMENT OF PUBLIC WORKS.

THE CONTRACTOR SHALL BE RESPONSIBLE FOR DETERMINING THE EXACT LOCATION, DEPTH, AND SIZE OF ALL UNDERGROUND UTILITIES AND STRUCTURES AND SHALL BE LIABLE FOR ANY DAMAGE CAUSED BY FAILURE TO COMPLY WITH THESE INSTRUCTIONS.

ALL WORK SHALL CONFORM TO THE CITY OF GULFPORT STANDARD SPECIFICATIONS FOR PUBLIC WORKS CONSTRUCTION.

ALL PARKING LOT DIMENSIONS AND CURVE DATA ARE FROM THE BACK OF CURB UNLESS OTHERWISE NOTED.

SIGNAGE AND PAVEMENT MARKINGS ARE TO COMPLY WITH THE MANUAL ON UNIFORM TRAFFIC CONTROL DEVICES FOR STREETS AND HIGHWAY

REFER TO ARCHITECTURAL PLANS FOR ALL SIDEWALKS.

REFER TO ELECTRICAL PLANS FOR PARKING LOT LIGHTING.

FOR BUILDING DIMENSIONS, REFER TO ARCHITECTURAL PLANS.

FOR HANDICAP PARKING DETAILS & PAVING SECTIONS SEE SHEET C-305.

FOR HANDICAP RAMP DETAILS SEE SHEET C-305.

THE CONTRACTOR SHALL BE RESPONSIBLE FOR COORDINATING UTILITY INTERFACE WITH BUILDING TIE IN.

LOCATION, SIZE AND INSTALLATION OF SITE UTILITIES SHALL BE VERIFIED WITH PROPER UTILITY COMPANY PROVIDING SERVICE.

THE CONTRACTOR SHALL INCLUDE IN HIS BID PRICE ALL COSTS ASSOCIATED WITH BRINGING UTILITIES TO THE BUILDING INCLUDING ALL OFF SITE COSTS.

CONTRACTOR SHALL RESTORE ALL DISTURBED AREA.

FENCE LEGEND:

- —x— CHAIN LINK FENCE
- —o— DECORATIVE FENCE
- —□— DECORATIVE FENCE w/ POSTS

LEGEND:

- (10) NO. OF PARKING SPACES
- GRATE INLET
- JUNCTION BOX
- FIRE DEPARTMENT CONNECTION
- FIRE HYDRANT ASSEMBLY
- SANITARY SEWER MANHOLE
- HANDICAP PARKING
- —SD— DRAINAGE PIPE
- —G— GAS LINE
- —W— WATER LINE
- —FW— FIREWATER LINE
- —SS— 8" SANITARY SEWER
- —FM— SANITARY SEWER FORCE MAIN
- —PVC— 6" PVC SERVICE LINE
- —16— PROPOSED CONTOURS
- - 16 - - EXISTING CONTOURS
- EXISTING CONCRETE SIDEWALK
- LIGHT DUTY PAVING
- HEAVY DUTY PAVING
- CONCRETE PAVING
- GRAVEL PARKING (GRAVELPAVE)
- REINFORCED GRASS FIRE LANE (GRASSPAVE)
- RESURFACING
- WETLANDS

60 0 60 120
SCALE 1"=60'

GSA
GENERAL SERVICES ADMINISTRATION
77 FORSYTH STREET
SUITE 600
ATLANTA, GA 30303
TEL: (404)331-3200

AFRH The Premier Retirement Community for America's Veterans
JE JACOBS
PROJECT MANAGEMENT CONSULTANT TO THE GENERAL SERVICES ADMINISTRATION

YATES CONSTRUCTION

SFCS Architecture Engineering Planning Interiors

URS
URS CORPORATION
2020 K ST, NW
SUITE 300
WASHINGTON D.C. 20006

CERTIFICATIONS

KEY PLAN

REVISION NOTES		
MARK	DATE	DESCRIPTION
A	09/08/08	ISSUED FOR CONSTRUCTION
B	12/02/08	CIVIL STRUCTURAL ARCH
C	06/04/09	ADDED SIGNAGE & DETAILS
D	08/14/09	SITE REVISIONS

GRAPHIC SCALE

CONTRACTORS	
A/E CON. NO.	GS-04P-07-EX-C-0099
A/E TASK NO.	
CONS. CONTR.	
CONS. WORK	
PRIME A/E	
SUB A/E	
CONSTR. CON.	

BUILDING	
NAME	ARMED FORCES RETIREMENT HOME
STREET	1800 BEACH DRIVE
CITY/ST./ZIP	GULFPORT, MS 39507
BUILDING NO.	
OTHER	
BUILDING NOs.	
FACILITY CODE	

PROJECT	
PROJECT TITLE	ARMED FORCES RETIREMENT HOME GULFPORT, MISSISSIPPI
PROJECT DESCRIPTION	NEW CONSTRUCTION
PROJECT NO.	31942982
GSA PM	STEVEN SMITH
SUBMISSION	ISSUED FOR CONSTRUCTION
SUB. DATE	09/08/2008

DRAWING	
DRAWING TITLE	SITE PLAN
FILE NAME	
FLOOR NO.	
DRAWN BY	DATE DRAFTED:
CHECKED BY	SHEET SIZE: 34 X 44
DRAWING NO.	C 3 01
	DISCIPLINE SHEET TYPE SEQUENCE
	SHEET OF

PROPERTY OF THE UNITED STATES GOVERNMENT – FOR OFFICIAL USE ONLY. Do not remove this notice. Properly destroy documents when no longer needed.

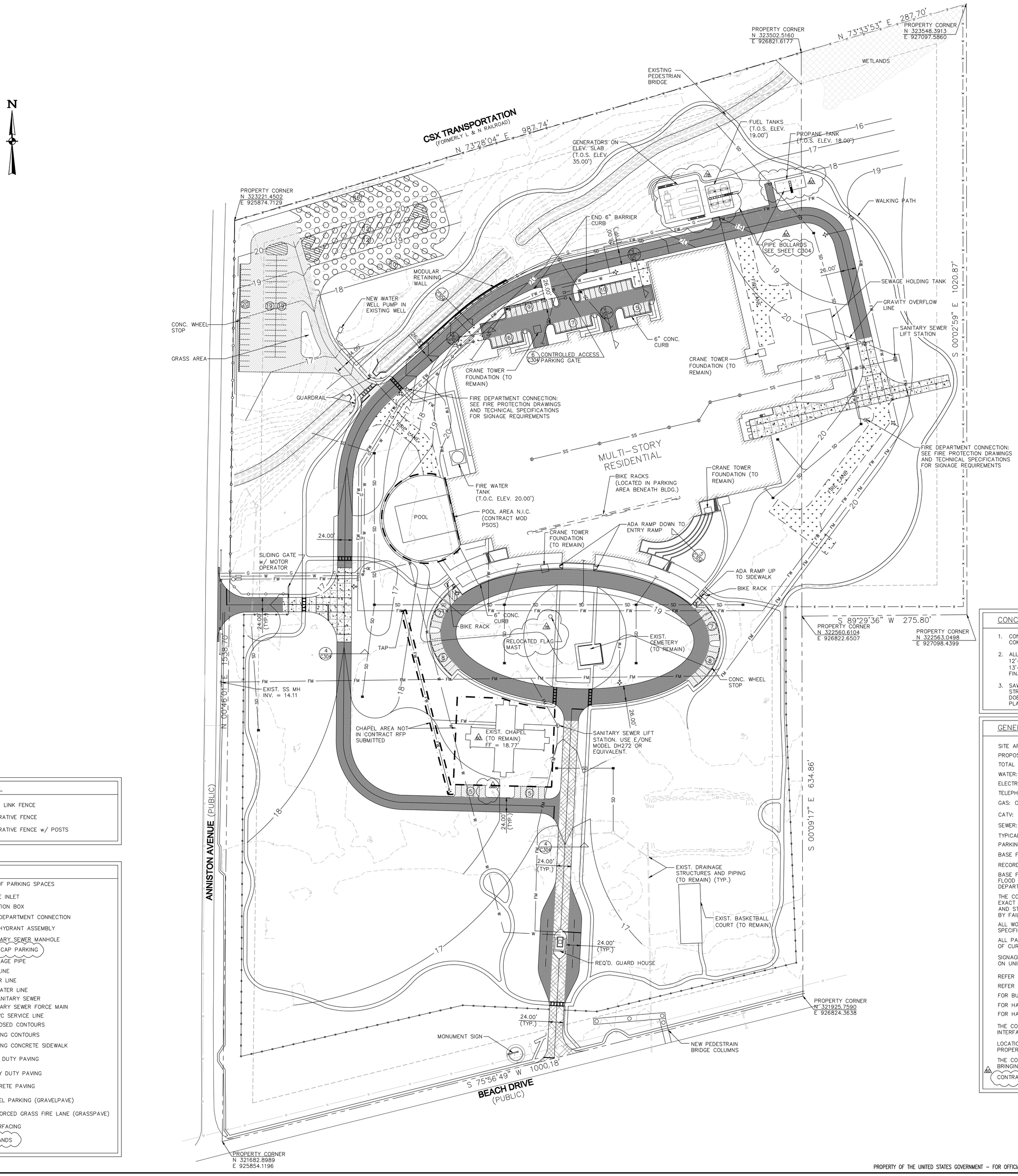

PARKING TABLE:

BENEATH BUILDING:	365
NORTH OF BLDG:	37
RV:	50
REMOTE:	58
VISITORS:	40
TOTAL SPACES:	550
TOTAL ADA REQ'D:	11
TOTAL PROVIDED:	11

CONCRETE PAVING NOTES:

1. CONCRETE SHALL BE NORMAL WEIGHT WITH A MINIMUM 4,000 PSI COMPRESSIVE STRENGTH AFTER 28 DAYS.
2. ALL JOINTS SHALL BE SAW-CUT. JOINT SPACING SHALL BE A MAXIMUM 12'-0"x12'-0" O.C. EACH WAY FOR 24'-0" WIDTH ROADS AND 13'-0"x13'-0" O.C. FOR 26'-0" WIDTH ROADS. CONTRACTOR SHALL SUBMIT FINAL SAW-CUT JOINT PLAN TO ENGINEER FOR APPROVAL.
3. SAWING SHALL BEGIN AS SOON AS CONCRETE HAS REACHED SUFFICIENT STRENGTH TO SUPPORT SAWING EQUIPMENT AND SPALLING OF CONCRETE DOES NOT OCCUR. SAWING SHALL BE COMPLETED WITH IN 10 HOURS OF PLACING CONCRETE.

GENERAL NOTES:

SITE AREA: 41 ACRES

PROPOSED USE: MULTI-STORY RESIDENTIAL

TOTAL BUILDING AREA: 198525 S.F. (FOOTPRINT AREA)

WATER: CITY OF GULFPORT

ELECTRIC: MISSISSIPPI POWER CO.

TELEPHONE: AT&T

GAS: CENTER POINT ENERGY

CATV: CABLE ONE

SEWER: CITY OF GULFPORT

TYPICAL PARKING STALLS: 9'x18' RV/STALL: 30'x10'

PARKING AREA: ASPHALT PAVEMENT

BASE FLOOD ELEVATION: 13.00'

RECORD INUNDATION: 13.00'

BASE FLOOD ELEVATIONS ARE SUBJECT TO CHANGE AND THE CURRENT BASE FLOOD ELEVATION SHOULD BE VERIFIED WITH THE ENGINEERING DIVISION OF THE DEPARTMENT OF PUBLIC WORKS.

THE CONTRACTOR SHALL BE RESPONSIBLE FOR DETERMINING THE EXACT LOCATION, DEPTH, AND SIZE OF ALL UNDERGROUND UTILITIES AND STRUCTURES AND SHALL BE LIABLE FOR ANY DAMAGE CAUSED BY FAILURE TO COMPLY WITH THESE INSTRUCTIONS.

ALL WORK SHALL CONFORM TO THE CITY OF GULFPORT STANDARD SPECIFICATIONS FOR PUBLIC WORKS CONSTRUCTION.

ALL PARKING LOT DIMENSIONS AND CURVE DATA ARE FROM THE BACK OF CURB UNLESS OTHERWISE NOTED.

SIGNAGE AND PAVEMENT MARKINGS ARE TO COMPLY WITH THE MANUAL ON UNIFORM TRAFFIC CONTROL DEVICES FOR STREETS AND HIGHWAY

REFER TO ARCHITECTURAL PLANS FOR ALL SIDEWALKS.

REFER TO ELECTRICAL PLANS FOR PARKING LOT LIGHTING.

FOR BUILDING DIMENSIONS, REFER TO ARCHITECTURAL PLANS.

FOR HANDICAP PARKING DETAILS & PAVING SECTIONS SEE SHEET C-305.

FOR HANDICAP RAMP DETAILS SEE SHEET C-305.

THE CONTRACTOR SHALL BE RESPONSIBLE FOR COORDINATING UTILITY INTERFACE WITH BUILDING TIE IN.

LOCATION, SIZE AND INSTALLATION OF SITE UTILITIES SHALL BE VERIFIED WITH PROPER UTILITY COMPANY PROVIDING SERVICE.

THE CONTRACTOR SHALL INCLUDE IN HIS BID PRICE ALL COSTS ASSOCIATED WITH BRINGING UTILITIES TO THE BUILDING INCLUDING ALL OFF SITE COSTS.

△2 CONTRACTOR SHALL RESTORE ALL DISTURBED AREA.

FENCE LEGEND:

- —x— CHAIN LINK FENCE
- —o— DECORATIVE FENCE
- —□— DECORATIVE FENCE w/ POSTS

LEGEND:

- (10) NO. OF PARKING SPACES
- GRATE INLET
- JUNCTION BOX
- FIRE DEPARTMENT CONNECTION
- FIRE HYDRANT ASSEMBLY
- (S) SANITARY SEWER MANHOLE
- △2 HANDICAP PARKING
- —SD— DRAINAGE PIPE
- —G— GAS LINE
- —W— WATER LINE
- —FW— FIREWATER LINE
- —SS— 8" SANITARY SEWER
- —FM— SANITARY SEWER FORCE MAIN
- —PVC— 6" PVC SERVICE LINE
- —16— PROPOSED CONTOURS
- - 16 - - EXISTING CONTOURS
- EXISTING CONCRETE SIDEWALK
- LIGHT DUTY PAVING
- HEAVY DUTY PAVING
- CONCRETE PAVING
- GRAVEL PARKING (GRAVELPAVE)
- REINFORCED GRASS FIRE LANE (GRASSPAVE)
- RESURFACING
- △2 WETLANDS

GSA — GENERAL SERVICES ADMINISTRATION
77 FORSYTH STREET
SUITE 600
ATLANTA, GA 30303
TEL: (404)331-3200

AFRH The Premier Retirement Community for America's Veterans

JACOBS — PROJECT MANAGEMENT CONSULTANT TO THE GENERAL SERVICES ADMINISTRATION

YATES CONSTRUCTION

SFCS Architecture Engineering Planning Interiors

URS CORPORATION
2020 K ST, NW
SUITE 300
WASHINGTON D.C. 20006

CERTIFICATIONS

KENNETH E. THOMAS — REGISTERED PROFESSIONAL ENGINEER — 9510 — STATE OF MISSISSIPPI

6/4/09

KEY PLAN

REVISION NOTES		
MARK	DATE	DESCRIPTION
△2	09/08/08	ISSUED FOR CONSTRUCTION
△3	12/02/08	CIVIL STRUCTURAL ARCH
△4	06/04/09	ADDED SIGNAGE & DETAILS

GRAPHIC SCALE

CONTRACTORS	
A/E CON. NO.	GS-04P-07-EX-C-0099
A/E TASK NO.	
CONS. CONTR.	
CONS. WORK	
PRIME A/E	
SUB A/E	
CONSTR. CON.	

BUILDING	
NAME	ARMED FORCES RETIREMENT HOME
STREET	1800 BEACH DRIVE
CITY/ST./ZIP	GULFPORT, MS 39507
BUILDING NO.	
OTHER	
BUILDING NOs.	
FACILITY CODE	

PROJECT	
PROJECT TITLE	ARMED FORCES RETIREMENT HOME GULFPORT, MISSISSIPPI
PROJECT DESCRIPTION	NEW CONSTRUCTION
PROJECT NO.	31942982
GSA PM	STEVEN SMITH
SUBMISSION	ISSUED FOR CONSTRUCTION
SUB. DATE	09/08/2008

DRAWING	
DRAWING TITLE	SITE PLAN
FILE NAME	
FLOOR NO.	
DRAWN BY	DATE DRAFTED:
CHECKED BY	SHEET SIZE: 34 X 44
DRAWING NO.	C 3 01 (DISCIPLINE SHEET TYPE SEQUENCE)
	SHEET OF

PROPERTY OF THE UNITED STATES GOVERNMENT – FOR OFFICIAL USE ONLY. Do not remove this notice. Properly destroy documents when no longer needed.

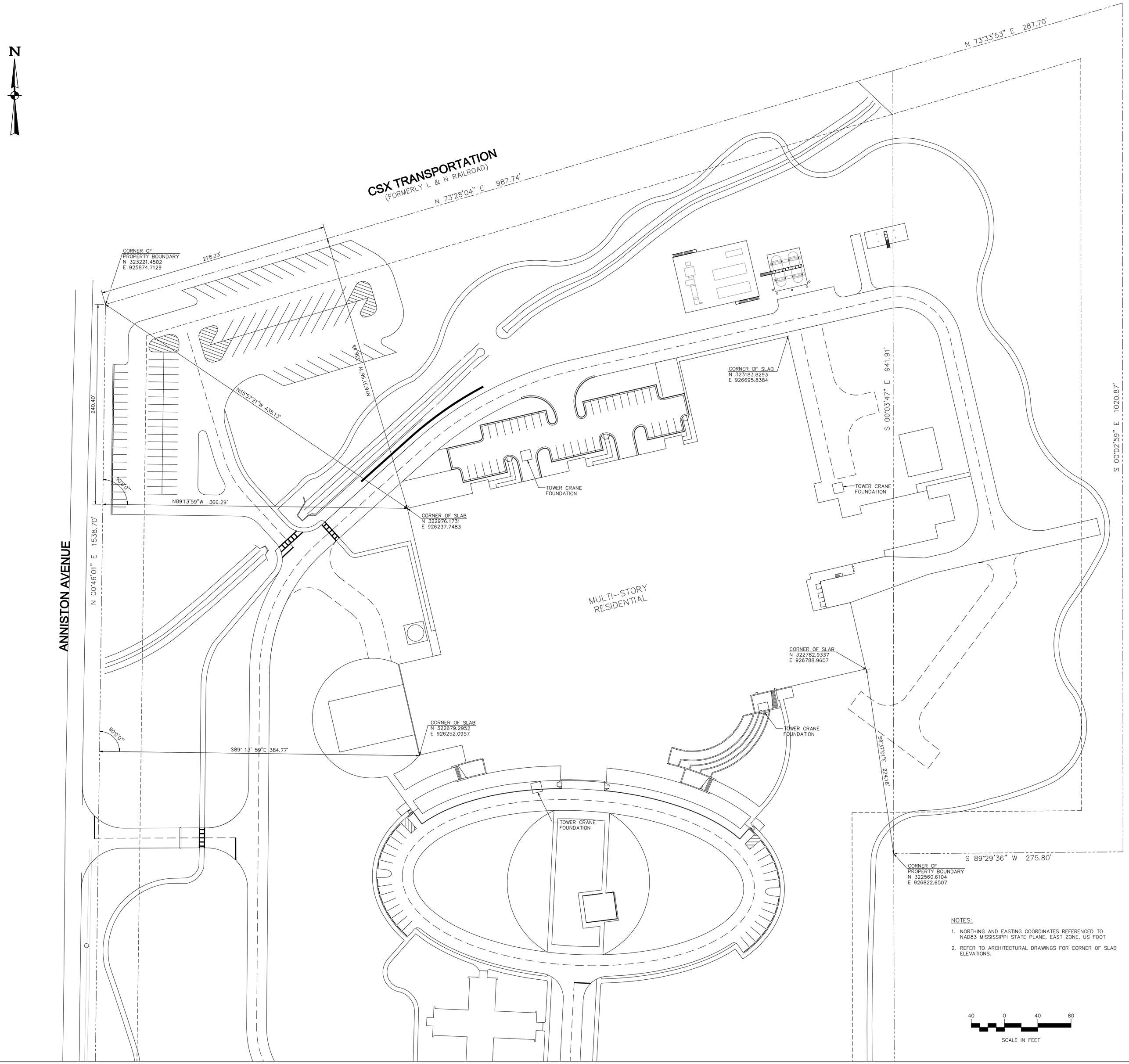

NOTES:

1. NORTHING AND EASTING COORDINATES REFERENCED TO NAD83 MISSISSIPPI STATE PLANE, EAST ZONE, US FOOT
2. REFER TO ARCHITECTURAL DRAWINGS FOR CORNER OF SLAB ELEVATIONS.

PROPERTY OF THE UNITED STATES GOVERNMENT – FOR OFFICIAL USE ONLY. Do not remove this notice. Properly destroy documents when no longer needed.

GENERAL SERVICES ADMINISTRATION
77 FORSYTH STREET
SUITE 600
ATLANTA, GA 30303
TEL: (404)331-3200

AFRH The Premier Retirement Community for America's Veterans

JACOBS
PROJECT MANAGEMENT CONSULTANT TO THE GENERAL SERVICES ADMINISTRATION

YATES CONSTRUCTION

SFCS Architecture Engineering Planning Interiors

URS CORPORATION
2020 K ST, NW
SUITE 300
WASHINGTON D.C. 20006

ISSUED FOR CONSTRUCTION

CERTIFICATIONS

KEY PLAN

REVISION NOTES

MARK	DATE	DESCRIPTION
	01/16/08	ISSUED FOR CONSTRUCTION
1	09/08/08	RE-ISSUED FOR CONSTRUCTION

GRAPHIC SCALE

CONTRACTORS

A/E CON. NO.	GS-04P-07-EX-C-0099
A/E TASK NO.	
CONS. CONTR.	
CONS. WORK	
PRIME A/E	
SUB A/E	
CONSTR. CON.	

BUILDING

NAME	ARMED FORCES RETIREMENT HOME
STREET	1800 BEACH DRIVE
CITY/ST./ZIP	GULFPORT, MS 39507
BUILDING NO.	
OTHER	
BUILDING NOs.	
FACILITY CODE	

PROJECT

PROJECT TITLE	ARMED FORCES RETIREMENT HOME GULFPORT, MISSISSIPPI
PROJECT DESCRIPTION	NEW CONSTRUCTION
PROJECT NO.	31942982
GSA PM	STEVEN SMITH
SUBMISSION	ISSUED FOR CONSTRUCTION
SUB. DATE	09/08/2008

DRAWING

DRAWING TITLE	BUILDING LAYOUT
FILE NAME	
FLOOR NO.	
DRAWN BY	DATE DRAFTED:
CHECKED BY	SHEET SIZE: 34 X 44
DRAWING NO.	C 3 02 (DISCIPLINE SHEET TYPE SEQUENCE)
	SHEET OF

C:\Documents and Settings\sandra_davis\Desktop\AFRH\CONSTRUCTION\319492943-00000-g01-C-302.dwg 1/23/2008 1:04 PM Layout1

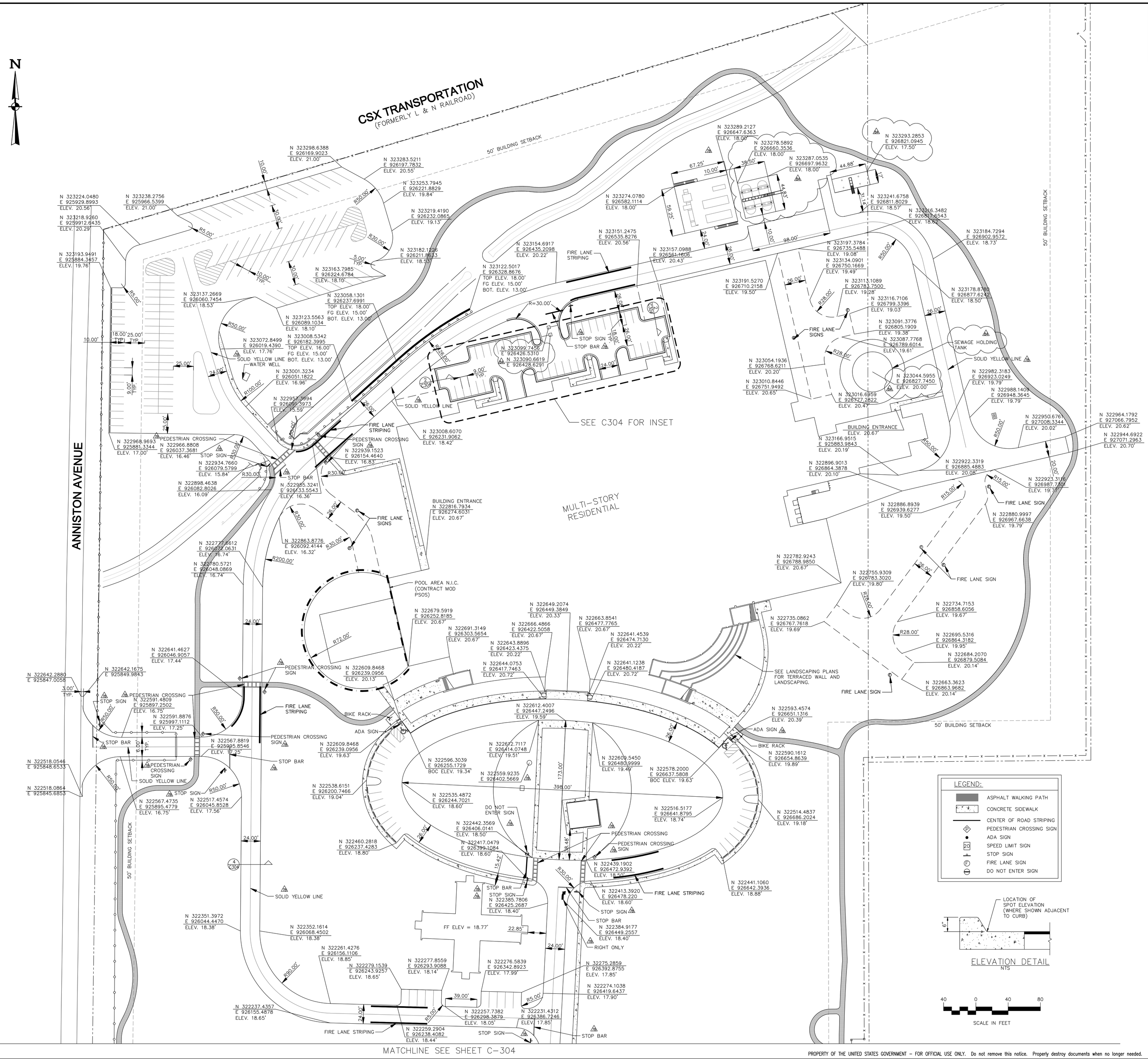

LEGEND:

- ASPHALT WALKING PATH
- CONCRETE SIDEWALK
- CENTER OF ROAD STRIPING
- PEDESTRIAN CROSSING SIGN
- ADA SIGN
- SPEED LIMIT SIGN
- STOP SIGN
- FIRE LANE SIGN
- DO NOT ENTER SIGN

ELEVATION DETAIL
NTS

40 0 40 80
SCALE IN FEET

GENERAL SERVICES ADMINISTRATION
77 FORSYTH STREET
SUITE 600
ATLANTA, GA 30303
TEL: (404)331-3200

AFRH The Premier Retirement Community for America's Veterans

JACOBS
PROJECT MANAGEMENT CONSULTANT TO THE GENERAL SERVICES ADMINISTRATION

YATES CONSTRUCTION

SFCS Architecture Engineering Planning Interiors

URS CORPORATION
2020 K ST, NW
SUITE 300
WASHINGTON D.C. 20006

CERTIFICATIONS

KENNETH E. THOMAS — REGISTERED PROFESSIONAL ENGINEER — 8510 — STATE OF MISSISSIPPI

KEY PLAN

REVISION NOTES

MARK	DATE	DESCRIPTION
A	09/08/08	ISSUED FOR CONSTRUCTION
B	12/02/08	CIVIL STRUCTURAL ARCH
C	06/04/09	ADDED SIGNAGE & DETAILS
D	08/14/09	SITE REVISIONS

GRAPHIC SCALE

CONTRACTORS

A/E CON. NO.	GS-04P-07-EX-C-0099
A/E TASK NO.	
CONS. CONTR.	
CONS. WORK	
PRIME A/E	
SUB A/E	
CONSTR. CON.	

BUILDING

NAME	ARMED FORCES RETIREMENT HOME
STREET	1800 BEACH DRIVE
CITY/ST./ZIP	GULFPORT, MS 39507
BUILDING NO.	
OTHER	
BUILDING NOs.	
FACILITY CODE	

PROJECT

PROJECT TITLE	ARMED FORCES RETIREMENT HOME GULFPORT, MISSISSIPPI
PROJECT DESCRIPTION	NEW CONSTRUCTION
PROJECT NO.	31942982
GSA PM	STEVEN SMITH
SUBMISSION	ISSUED FOR CONSTRUCTION
SUB. DATE	09/08/2008

DRAWING

DRAWING TITLE	GEOMETRIC PLAN
FILE NAME	
FLOOR NO.	
DRAWN BY	DATE DRAFTED:
CHECKED BY	SHEET SIZE: 34 X 44
DRAWING NO.	C 3 03 (DISCIPLINE SHEET TYPE SEQUENCE)
	SHEET OF

PROPERTY OF THE UNITED STATES GOVERNMENT – FOR OFFICIAL USE ONLY. Do not remove this notice. Properly destroy documents when no longer needed.

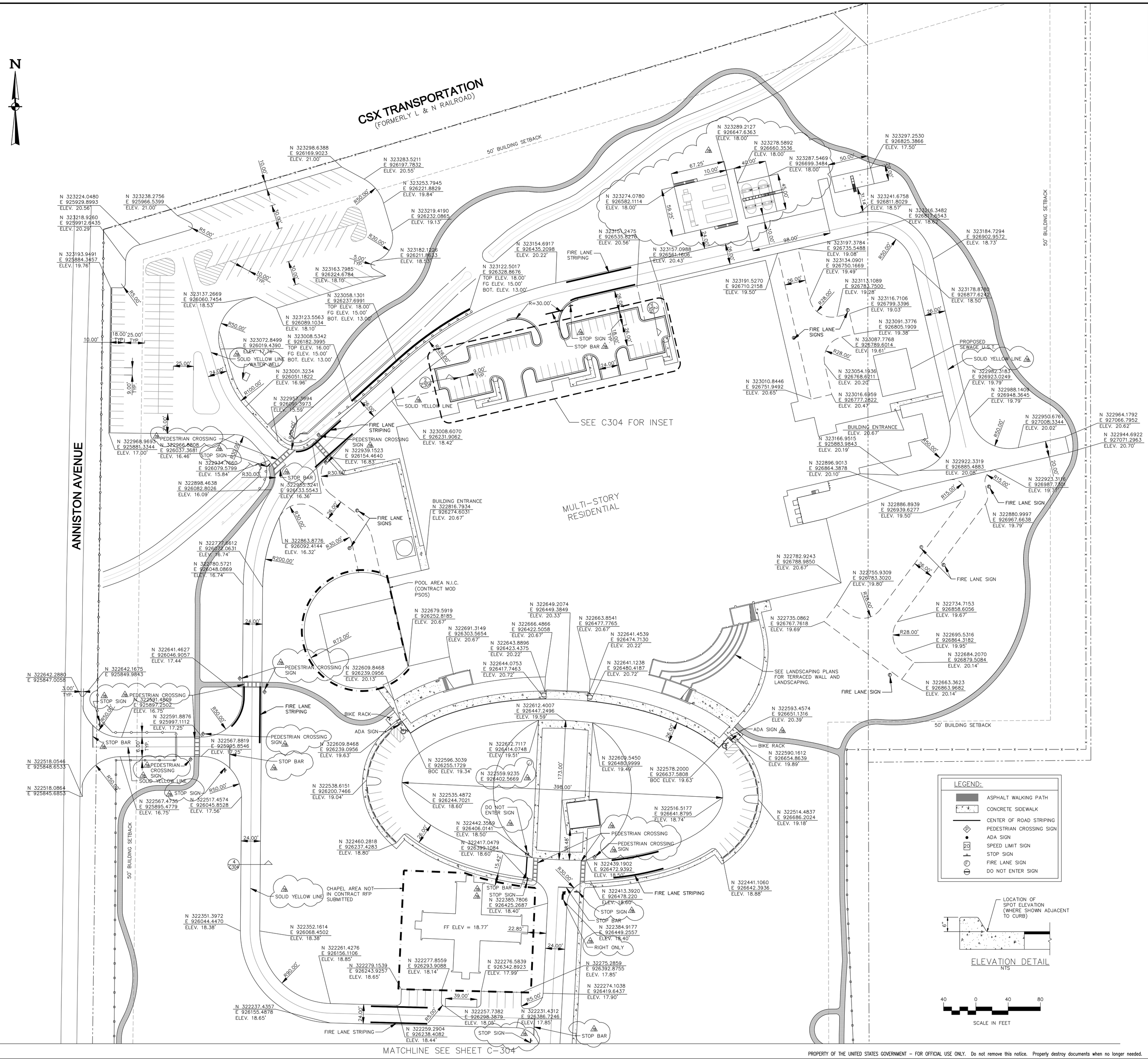

GENERAL SERVICES ADMINISTRATION
77 FORSYTH STREET
SUITE 600
ATLANTA, GA 30303
TEL: (404)331-3200

AFRH The Premier Retirement Community for America's Veterans

JACOBS
PROJECT MANAGEMENT CONSULTANT TO THE GENERAL SERVICES ADMINISTRATION

YATES CONSTRUCTION

SFCS Architecture Engineering Planning Interiors

URS CORPORATION
2020 K ST, NW
SUITE 300
WASHINGTON D.C. 20006

CERTIFICATIONS

KENNETH E. THOMAS REGISTERED PROFESSIONAL ENGINEER 6310 STATE OF MISSISSIPPI

6/4/09

KEY PLAN

REVISION NOTES

MARK	DATE	DESCRIPTION
A	09/08/08	ISSUED FOR CONSTRUCTION
B	12/02/08	CIVIL STRUCTURAL ARCH
C	06/04/09	ADDED SIGNAGE & DETAILS

GRAPHIC SCALE

CONTRACTORS

A/E CON. NO.	GS-04P-07-EX-C-0099
A/E TASK NO.	
CONS. CONTR.	
CONS. WORK	
PRIME A/E	
SUB A/E	
CONSTR. CON.	

BUILDING

NAME	ARMED FORCES RETIREMENT HOME
STREET	1800 BEACH DRIVE
CITY/ST./ZIP	GULFPORT, MS 39507
BUILDING NO.	
OTHER	
BUILDING NOs.	
FACILITY CODE	

PROJECT

PROJECT TITLE	ARMED FORCES RETIREMENT HOME GULFPORT, MISSISSIPPI
PROJECT DESCRIPTION	NEW CONSTRUCTION
PROJECT NO.	31942982
GSA PM	STEVEN SMITH
SUBMISSION	ISSUED FOR CONSTRUCTION
SUB. DATE	09/08/2008

DRAWING

DRAWING TITLE	GEOMETRIC PLAN
FILE NAME	
FLOOR NO.	
DRAWN BY	DATE DRAFTED:
CHECKED BY	SHEET SIZE: 34 X 44
DRAWING NO.	C 3 03 (DISCIPLINE SHEET TYPE SEQUENCE)
	SHEET OF

PROPERTY OF THE UNITED STATES GOVERNMENT – FOR OFFICIAL USE ONLY. Do not remove this notice. Properly destroy documents when no longer needed.

MATCHLINE SEE SHEET C-303

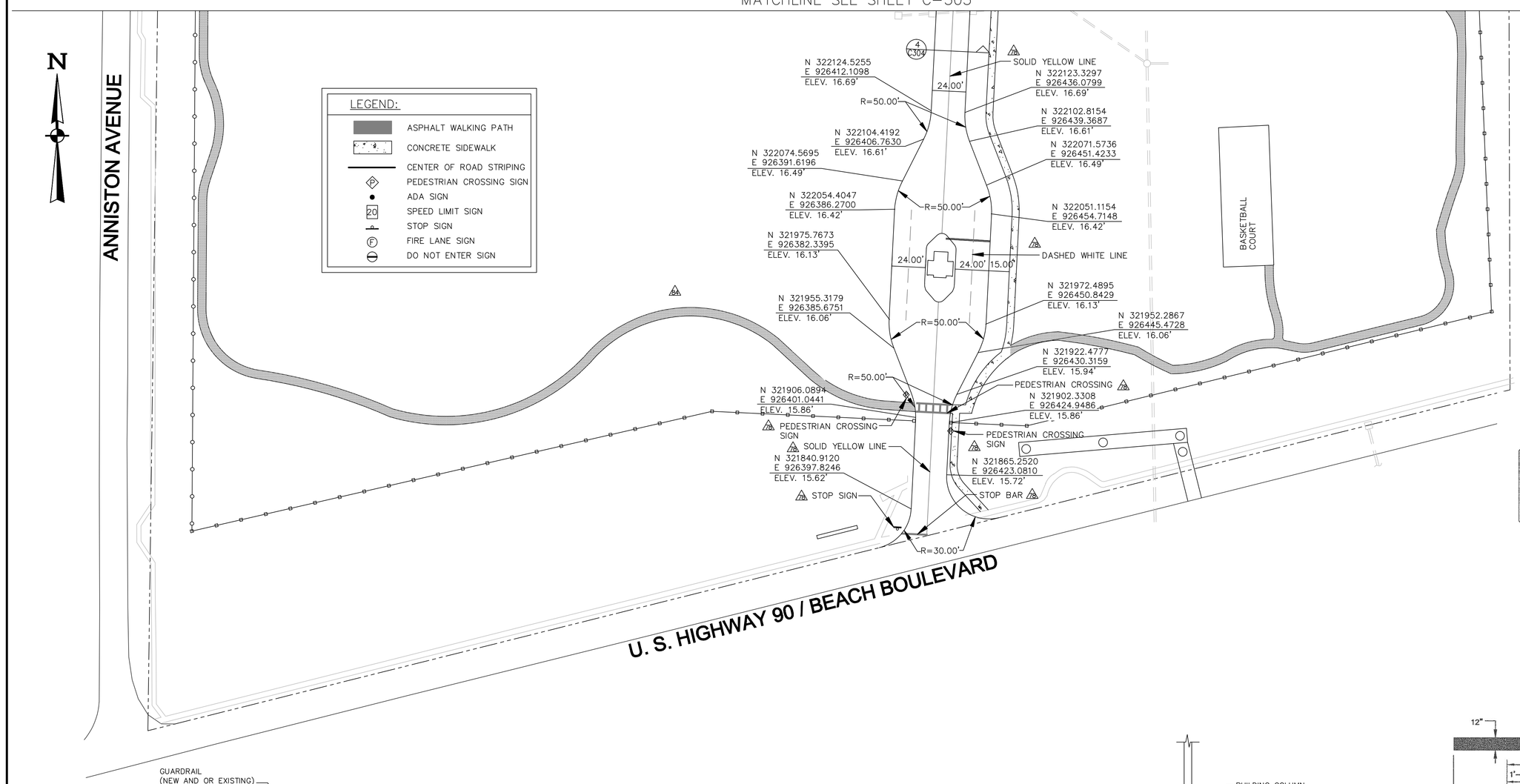

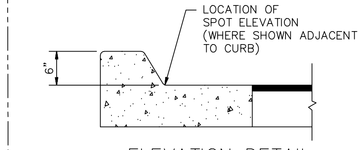

ELEVATION DETAIL
NTS

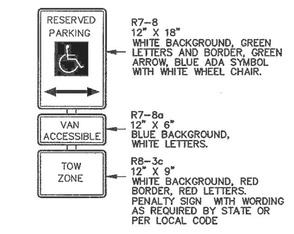

ACCESSIBLE PARKING SIGN
NTS

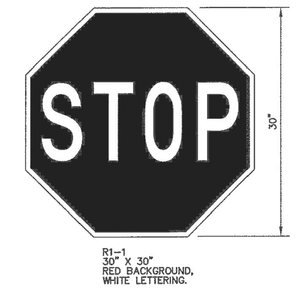

STOP SIGN
NTS

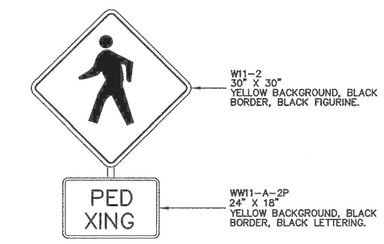

PEDESTRIAN CROSSING SIGN
NTS

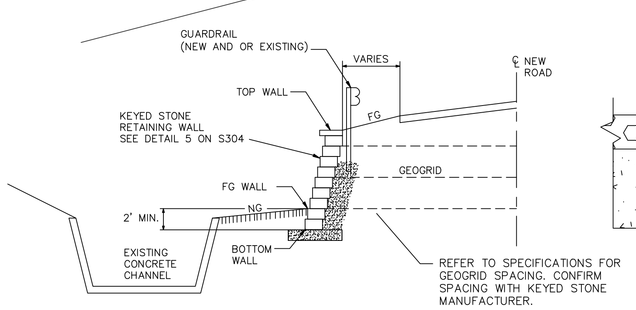

1 C304 SECTION
NTS

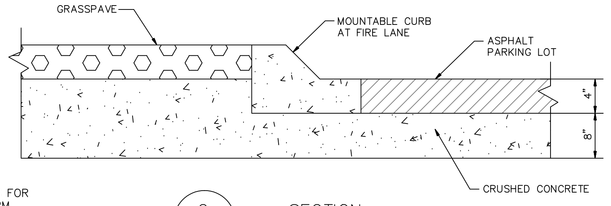

2 C304 SECTION
NTS

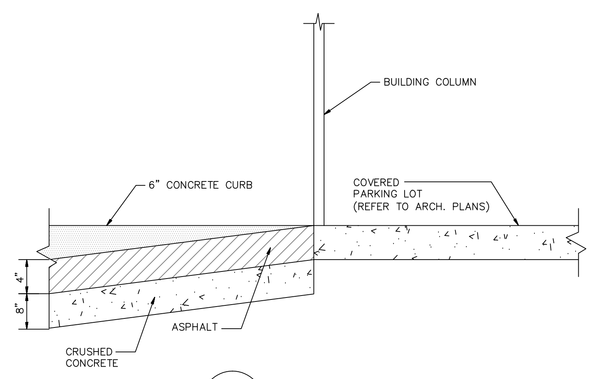

3 C304 SECTION
NTS

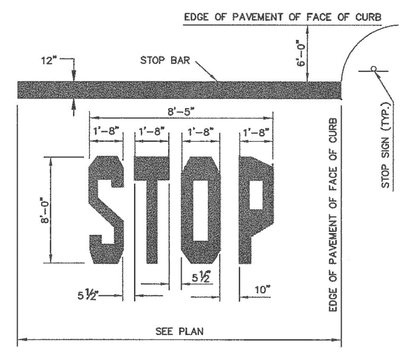

STOP BAR
NTS

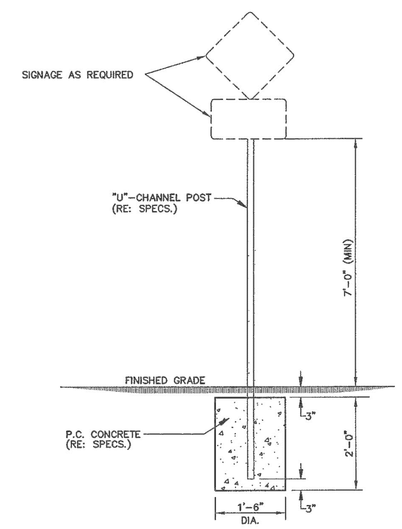

STREET SIGN BASE DETAIL
NTS

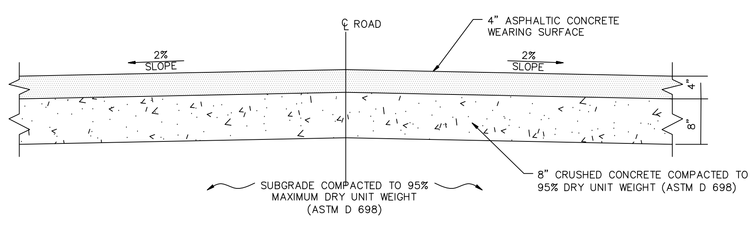

4 C304 SECTION
NTS

NO PARKING DETAIL
NTS

NO PARKING SIGN
NTS

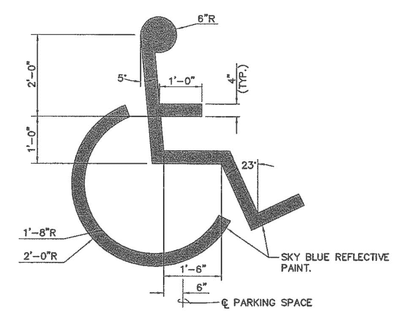

ADA PAVEMENT MARKING
NTS

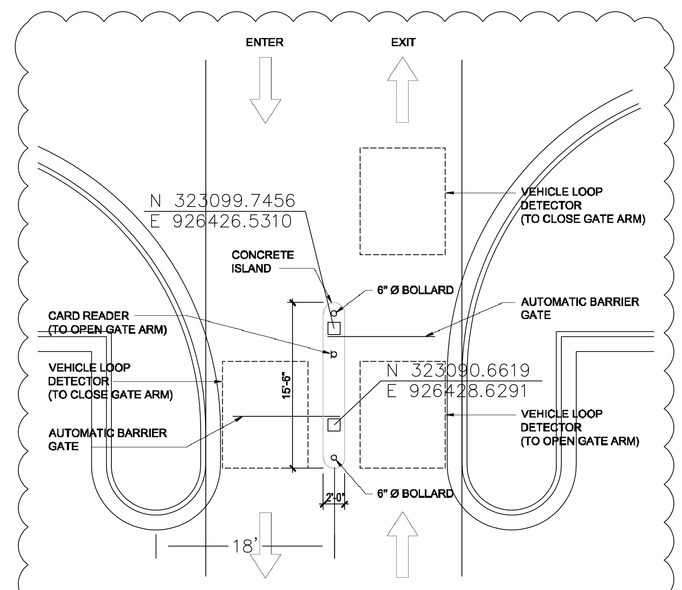

6 C304 PARKING CONTROL EQUIPMENT PLAN
NTS

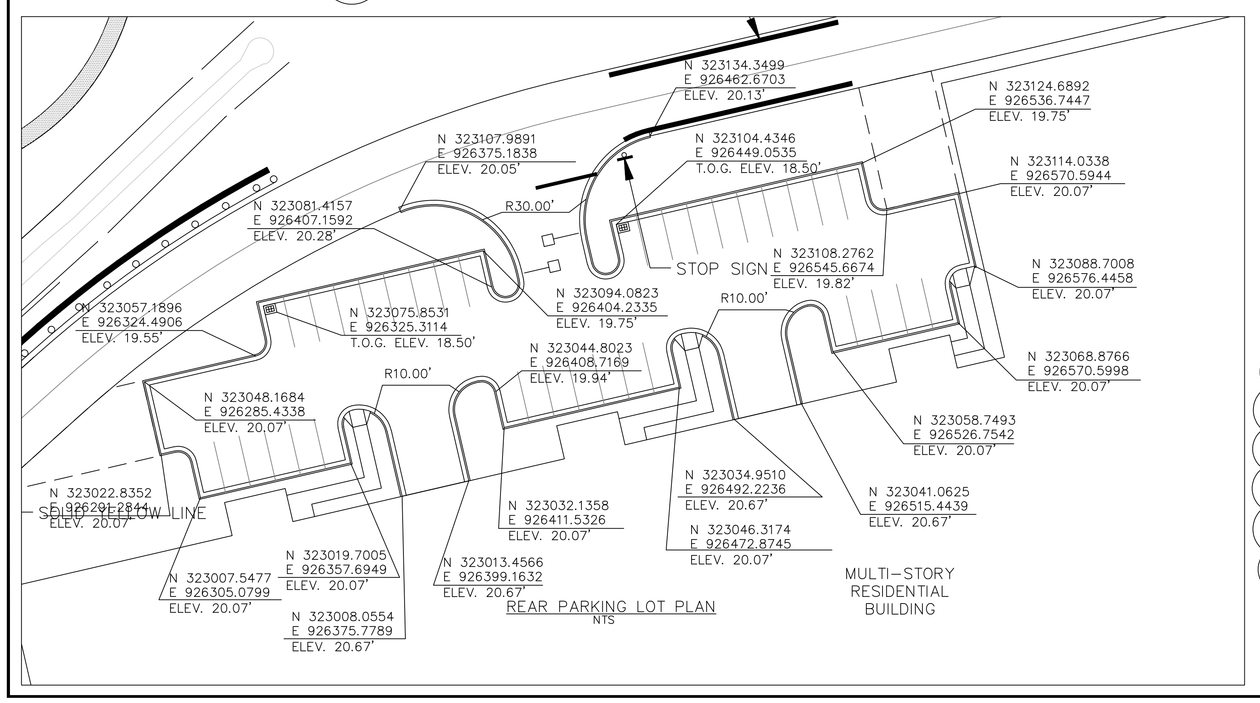

REAR PARKING LOT PLAN
NTS

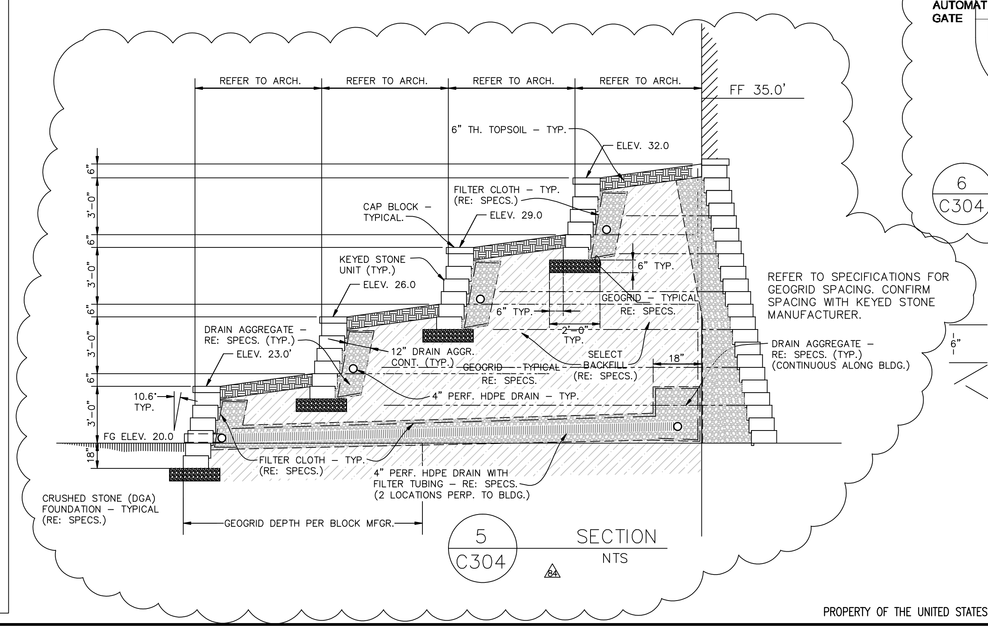

5 C304 SECTION
NTS

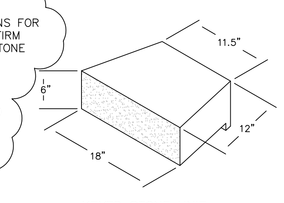

KEYED STONE UNIT

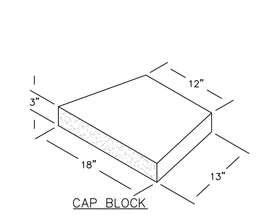

CAP BLOCK

40 0 40 80
SCALE IN FEET

PROPERTY OF THE UNITED STATES GOVERNMENT – FOR OFFICIAL USE ONLY. Do not remove this notice. Properly destroy documents when no longer needed.

GSA GENERAL SERVICES ADMINISTRATION
77 FORSYTH STREET
SUITE 600
ATLANTA, GA 30303
TEL: (404)331-3200

AFRH The Premier Retirement Community for America's Veterans
JE JACOBS
PROJECT MANAGEMENT CONSULTANT TO THE GENERAL SERVICES ADMINISTRATION

YATES CONSTRUCTION

SFCS Architecture Engineering Planning Interiors

URS
URS CORPORATION
2020 K ST, NW
SUITE 300
WASHINGTON D.C. 20006

KEY PLAN

REVISION NOTES

MARK	DATE	DESCRIPTION
A	09/08/08	ISSUED FOR CONSTRUCTION
B	12/02/08	CIVIL STRUCTURAL ARCH
C	06/04/09	ADDED SIGNAGE & DETAILS
D	08/14/09	SITE REVISIONS

GRAPHIC SCALE

CONTRACTORS

A/E CON. NO.	GS-04P-07-EX-C-0099
A/E TASK NO.	
CONS. CONTR.	
CONS. WORK	
PRIME A/E	
SUB A/E	
CONSTR. CON.	

BUILDING

NAME	ARMED FORCES RETIREMENT HOME
STREET	1800 BEACH DRIVE
CITY/ST./ZIP	GULFPORT, MS 39507
BUILDING NO.	
OTHER	
BUILDING NOs.	
FACILITY CODE	

PROJECT

PROJECT TITLE	ARMED FORCES RETIREMENT HOME GULFPORT, MISSISSIPPI
PROJECT DESCRIPTION	NEW CONSTRUCTION
PROJECT NO.	31942982
GSA PM	STEVEN SMITH
SUBMISSION	ISSUED FOR CONSTRUCTION
SUB. DATE	09/08/2008

DRAWING

DRAWING TITLE	GEOMETRIC PLAN
FILE NAME	
FLOOR NO.	
DRAWN BY	DATE DRAFTED:
CHECKED BY	SHEET SIZE: 34 X 44
DRAWING NO.	C 3 04 (DISCIPLINE SHEET TYPE SEQUENCE)
	SHEET OF

SPECIFICATIONS

MATCHLINE SEE SHEET C-303

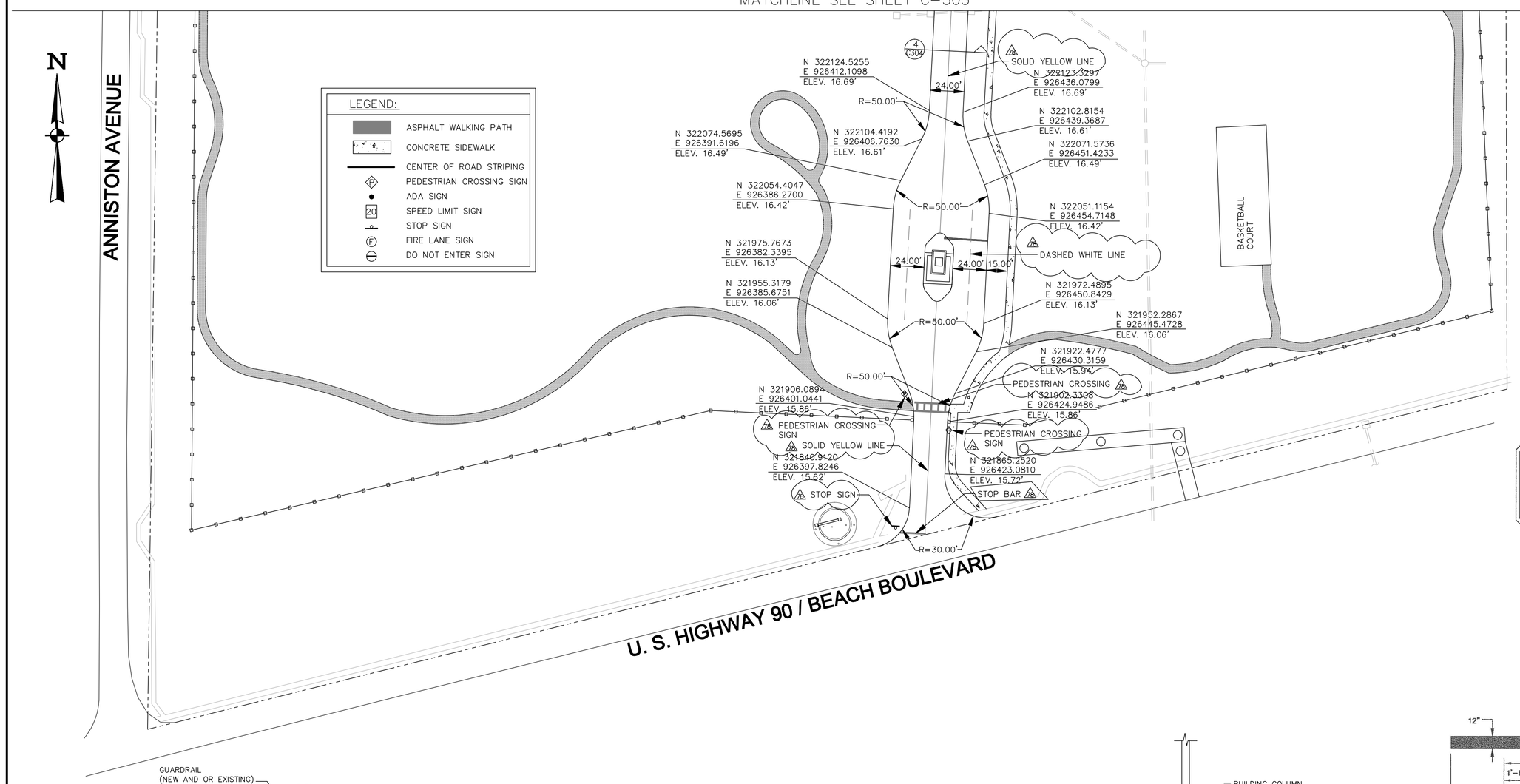

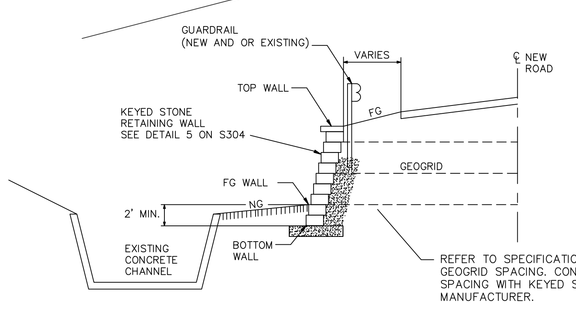

1 C304 SECTION NTS

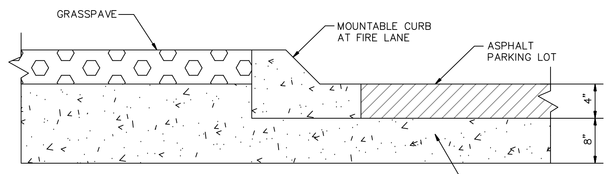

2 C304 SECTION NTS

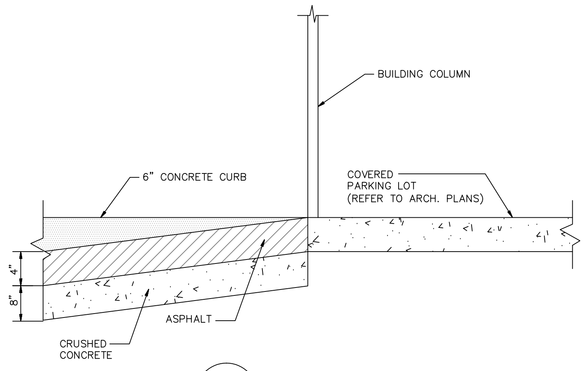

3 C304 SECTION NTS

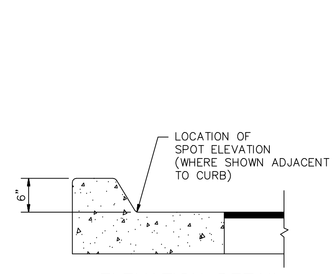

ELEVATION DETAIL NTS

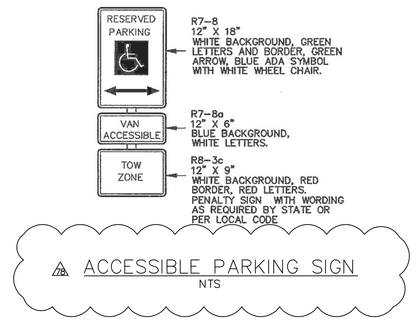

ACCESSIBLE PARKING SIGN NTS

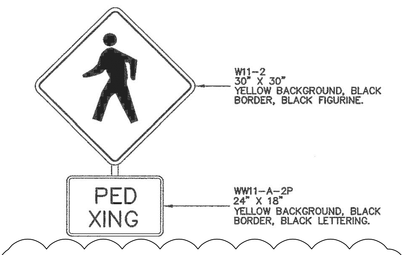

PEDESTRIAN CROSSING SIGN NTS

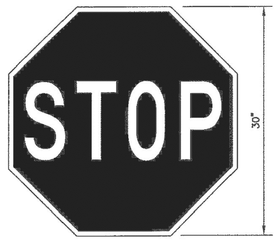

R1-1
30" X 30"
RED BACKGROUND, WHITE LETTERING.

STOP SIGN NTS

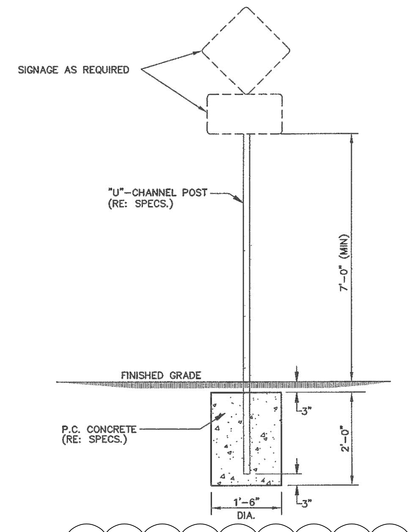

STREET SIGN BASE DETAIL NTS

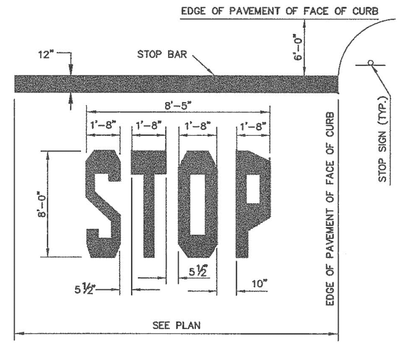

THESE WORDS AND BAR ARE TO BE PAINTED REFLECTIVE WHITE.

STOP BAR NTS

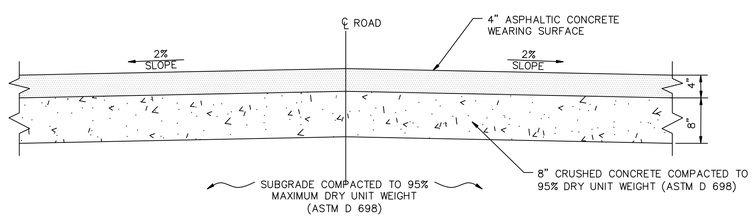

4 C304 SECTION NTS

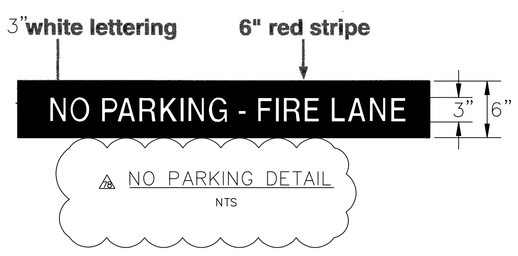

NO PARKING DETAIL NTS

R8-31D

NO PARKING SIGN NTS

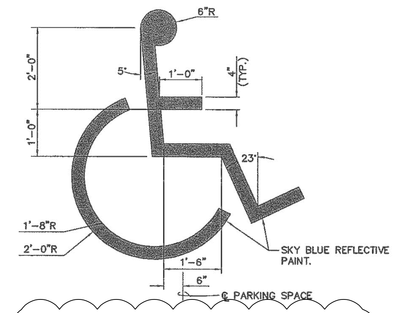

ADA PAVEMENT MARKING NTS

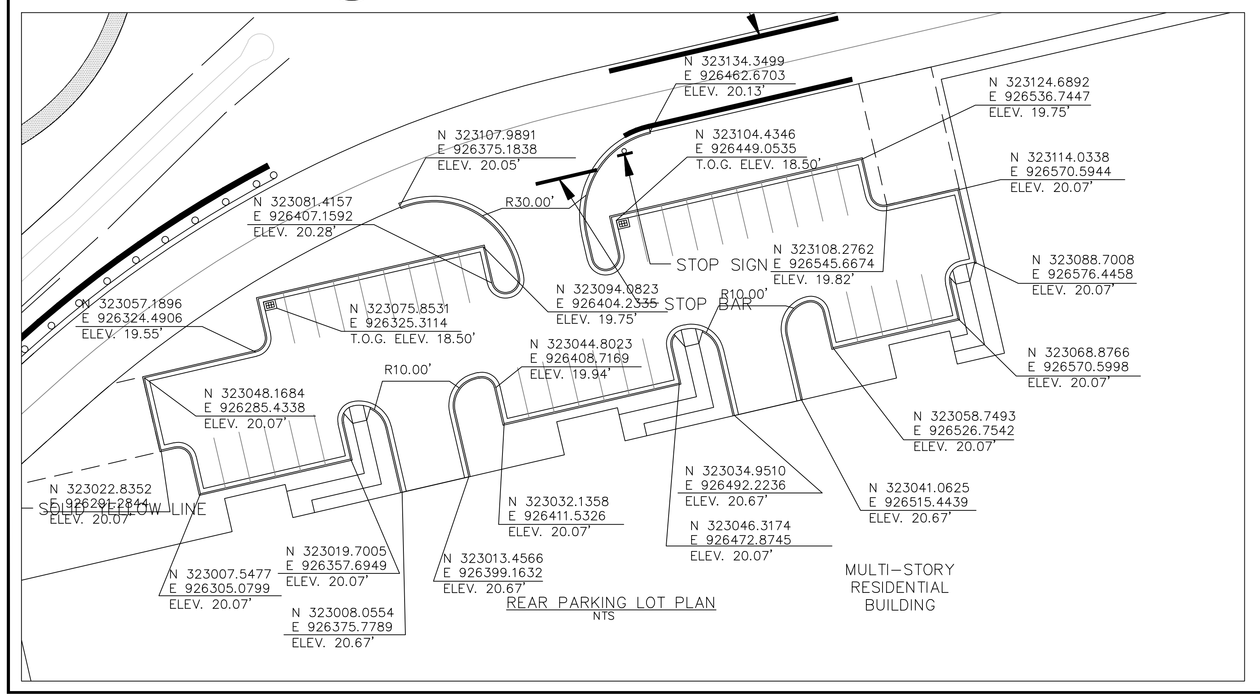

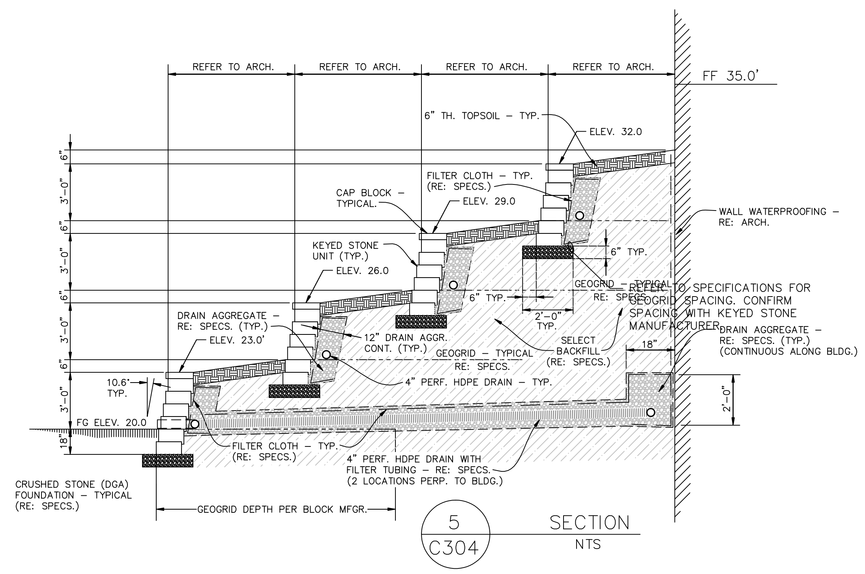

5 C304 SECTION NTS

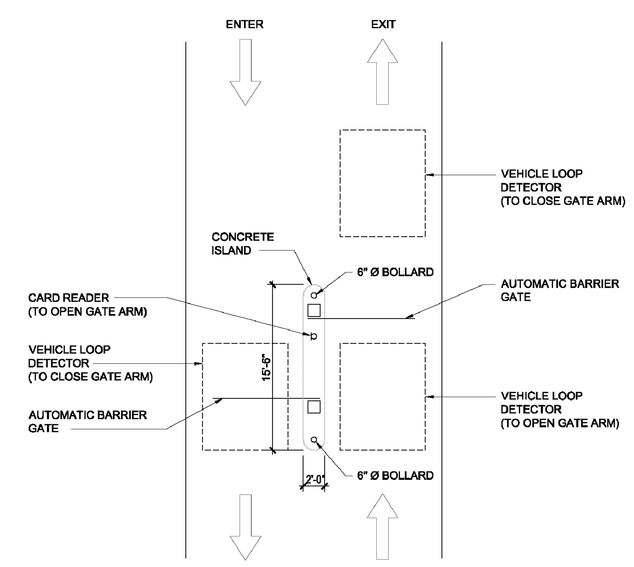

1 C304 PARKING CONTROL EQUIPMENT PLAN NTS

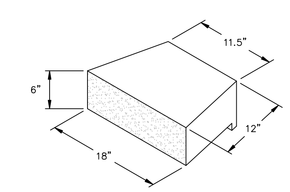

KEYED STONE UNIT

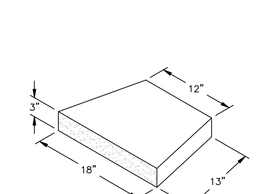

CAP BLOCK

SCALE IN FEET

PROPERTY OF THE UNITED STATES GOVERNMENT – FOR OFFICIAL USE ONLY. Do not remove this notice. Properly destroy documents when no longer needed.

GSA
GENERAL SERVICES ADMINISTRATION
77 FORSYTH STREET
SUITE 600
ATLANTA, GA 30303
TEL: (404)331-3200

AFRH The Premier Retirement Community for America's Veterans
JE JACOBS
PROJECT MANAGEMENT CONSULTANT TO THE GENERAL SERVICES ADMINISTRATION

YATES CONSTRUCTION

SFCS Architecture Engineering Planning Interiors

URS
URS CORPORATION
2020 K ST, NW
SUITE 300
WASHINGTON D.C. 20006

CERTIFICATIONS

KENNETH E. THOMAS, REGISTERED PROFESSIONAL ENGINEER, 9310, STATE OF MISSISSIPPI

6/4/09

KEY PLAN

REVISION NOTES

MARK	DATE	DESCRIPTION
A	09/08/08	ISSUED FOR CONSTRUCTION
B	12/02/08	CIVIL STRUCTURAL ARCH
C	06/04/09	ADDED SIGNAGE & DETAILS

GRAPHIC SCALE

CONTRACTORS

A/E CON. NO.	GS-04P-07-EX-C-0099
A/E TASK NO.	
CONS. CONTR.	
CONS. WORK	
PRIME A/E	
SUB A/E	
CONSTR. CON.	

BUILDING

NAME	ARMED FORCES RETIREMENT HOME
STREET	1800 BEACH DRIVE
CITY/ST./ZIP	GULFPORT, MS 39507
BUILDING NO.	
OTHER	
BUILDING NOs.	
FACILITY CODE	

PROJECT

PROJECT TITLE	ARMED FORCES RETIREMENT HOME GULFPORT, MISSISSIPPI
PROJECT DESCRIPTION	NEW CONSTRUCTION
PROJECT NO.	31942982
GSA PM	STEVEN SMITH
SUBMISSION	ISSUED FOR CONSTRUCTION
SUB. DATE	09/08/2008

DRAWING

DRAWING TITLE	GEOMETRIC PLAN
FILE NAME	
FLOOR NO.	
DRAWN BY	DATE DRAFTED:
CHECKED BY	SHEET SIZE: 34 X 44
DRAWING NO.	C 3 04 (DISCIPLINE SHEET TYPE SEQUENCE)
	SHEET OF

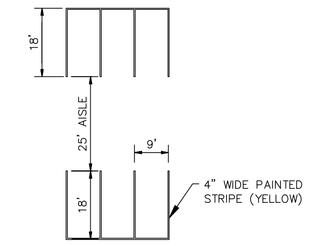

90° PARKING

STANDARD PARKING DETAIL
NTS

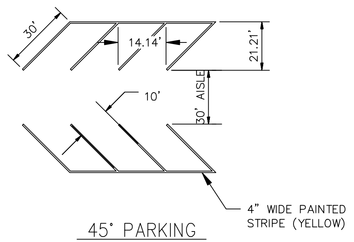

45° PARKING

RV/BOAT PARKING DETAIL
NTS

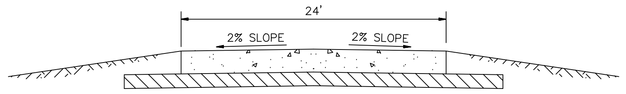

TYPICAL ROAD SECTION
NTS

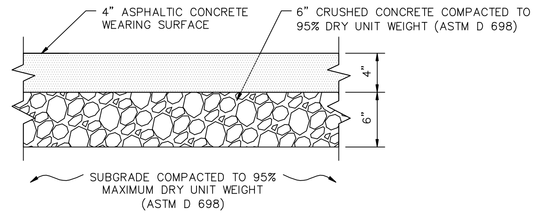

TYPICAL H.M.A.C. LIGHT DUTY SECTION
NTS

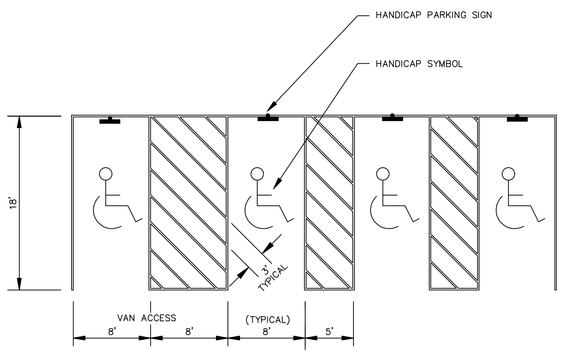

USE 4" WIDE BLUE STRIPING FOR ALL HANDICAP PARKING

NOTE:
MAXIMUM SLOPE IN ALL DIRECTIONS IN HANDICAP PARKING AREA SHALL NOT EXCEED 2%

HANDICAP PARKING DETAIL
NTS

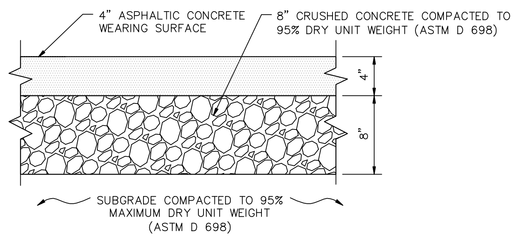

TYPICAL H.M.A.C. HEAVY DUTY SECTION
NTS

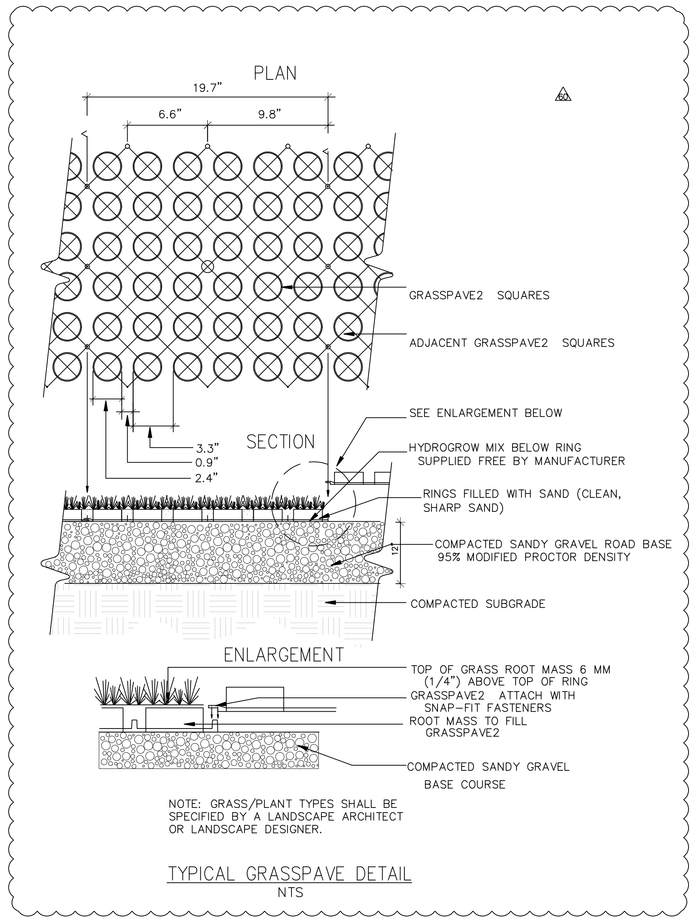

NOTE: GRASS/PLANT TYPES SHALL BE SPECIFIED BY A LANDSCAPE ARCHITECT OR LANDSCAPE DESIGNER.

TYPICAL GRASSPAVE DETAIL
NTS

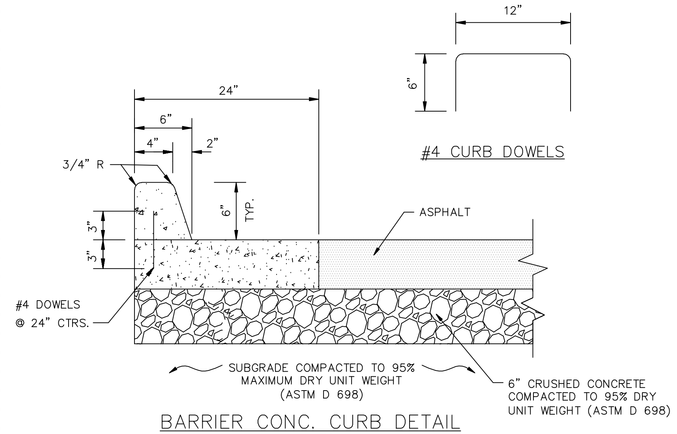

BARRIER CONC. CURB DETAIL
NTS

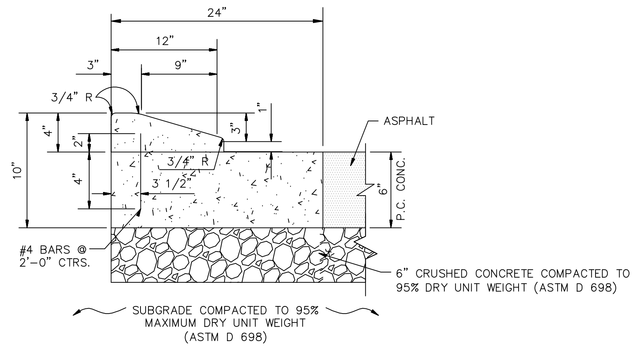

MOUNTABLE CONC. CURB DETAIL
NTS

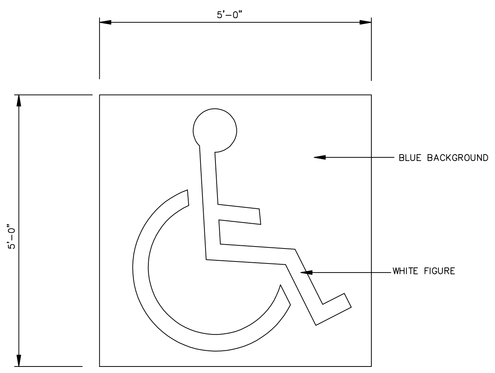

HANDICAP PARKING SYMBOL
NTS

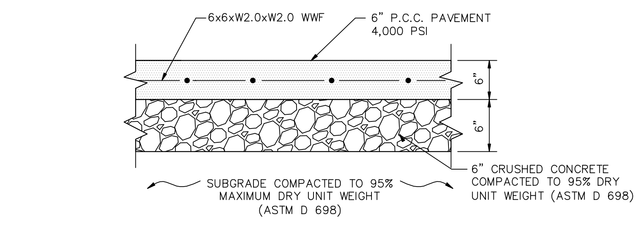

TYPICAL P.C.C. SECTION
NTS

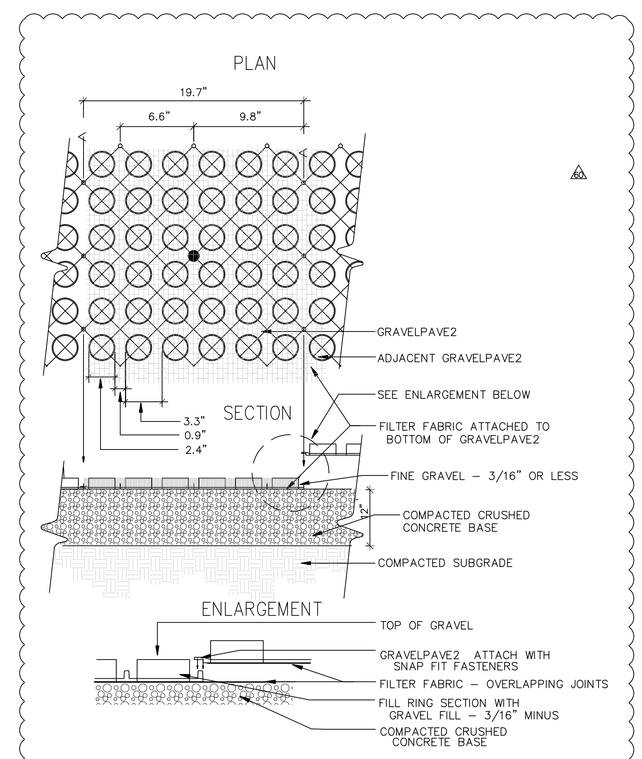

TYPICAL GRAVELPAVE DETAIL
NTS

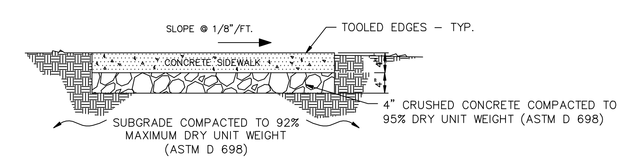

SECTION A–A
NTS

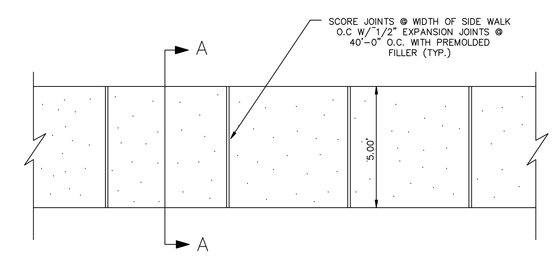

SIDEWALK PLAN
NTS

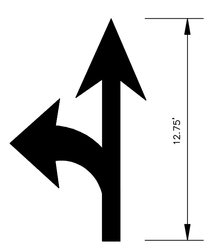

TURN & THROUGH LANE–USE ARROW

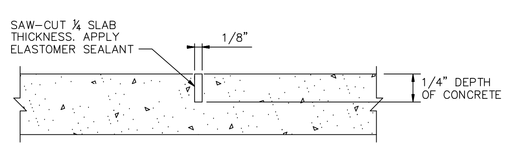

TYPICAL P.C.C. CONTROL JOINT DETAIL
NTS

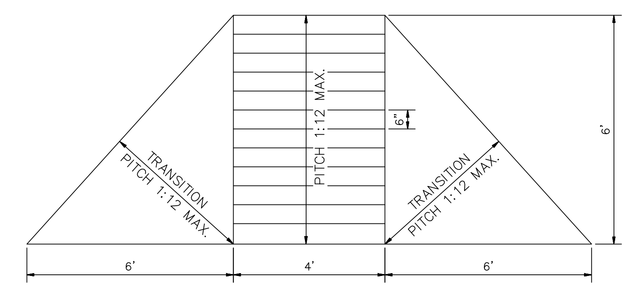

HANDICAP RAMP DETAIL
NTS

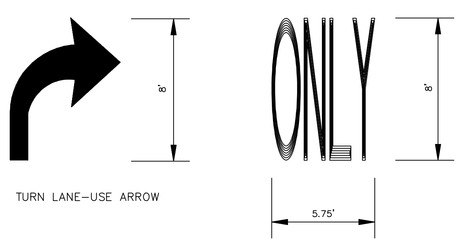

TURN LANE–USE ARROW

PAVEMENT MARKING DETAIL
NTS

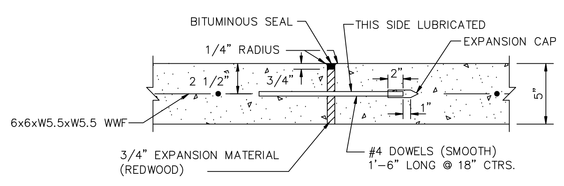

TYPICAL P.C.C. EXPANSION JOINT DETAIL
N.T.S.

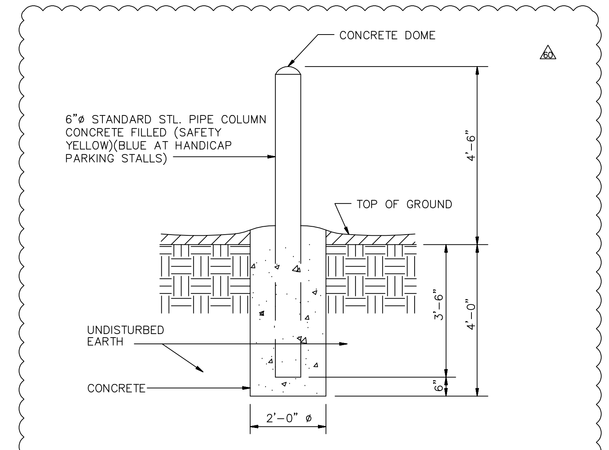

BOLLARD DETAIL
NTS

NOTES:

1. PAVEMENT DESIGN BASED ON A RESILIENT MODULUS (MR) = 6,000 PSI, CBR = 4

2. CRUSHED CONCRETE PERCENTAGE OF WEAR SHALL NOT EXCEED 45 WHEN TESTED IN ACCORDANCE WITH AASHTO DESIGNATION: T96

PROPERTY OF THE UNITED STATES GOVERNMENT – FOR OFFICIAL USE ONLY. Do not remove this notice. Properly destroy documents when no longer needed.

GENERAL SERVICES ADMINISTRATION
77 FORSYTH STREET
SUITE 600
ATLANTA, GA 30303
TEL: (404)331-3200

AFRH The Premier Retirement Community for America's Veterans

JACOBS
PROJECT MANAGEMENT CONSULTANT TO THE GENERAL SERVICES ADMINISTRATION

YATES CONSTRUCTION

SFCS Architecture Engineering Planning Interiors

URS CORPORATION
2020 K ST, NW
SUITE 300
WASHINGTON D.C. 20006

ISSUED FOR CONSTRUCTION

CERTIFICATIONS

KEY PLAN

MARK	DATE	DESCRIPTION
1	09/08/08	ISSUED FOR CONSTRUCTION
2	12/02/08	CIVIL, STRUCTURAL, AND ARCHITECTURAL REVISIONS

REVISION NOTES

GRAPHIC SCALE

A/E CON. NO.	GS-04P-07-EX-C-0099
A/E TASK NO.	
CONS. CONTR.	
CONS. WORK	
PRIME A/E	
SUB A/E	
CONSTR. CON.	
NAME	ARMED FORCES RETIREMENT HOME
STREET	1800 BEACH DRIVE
CITY/ST./ZIP	GULFPORT, MS 39507
BUILDING NO.	
OTHER BUILDING NOs.	
FACILITY CODE	
PROJECT TITLE	ARMED FORCES RETIREMENT HOME GULFPORT, MISSISSIPPI
PROJECT DESCRIPTION	NEW CONSTRUCTION
PROJECT NO.	31942982
GSA PM	STEVEN SMITH
SUBMISSION	ISSUED FOR CONSTRUCTION
SUB. DATE	09/08/2008
DRAWING TITLE	SITE DETAILS
FILE NAME	
FLOOR NO.	
DRAWN BY	DATE DRAFTED:
CHECKED BY	SHEET SIZE: 34 X 44
DRAWING NO.	C 3 05 (DISCIPLINE SHEET TYPE SEQUENCE)
	SHEET OF

C:\Documents and Settings\sandra_davis\My Documents\Projects\AFRH\CONSTRUCTION\31942943-00000-dt-C-305.dwg 1/23/2008 1:04 PM Layout1

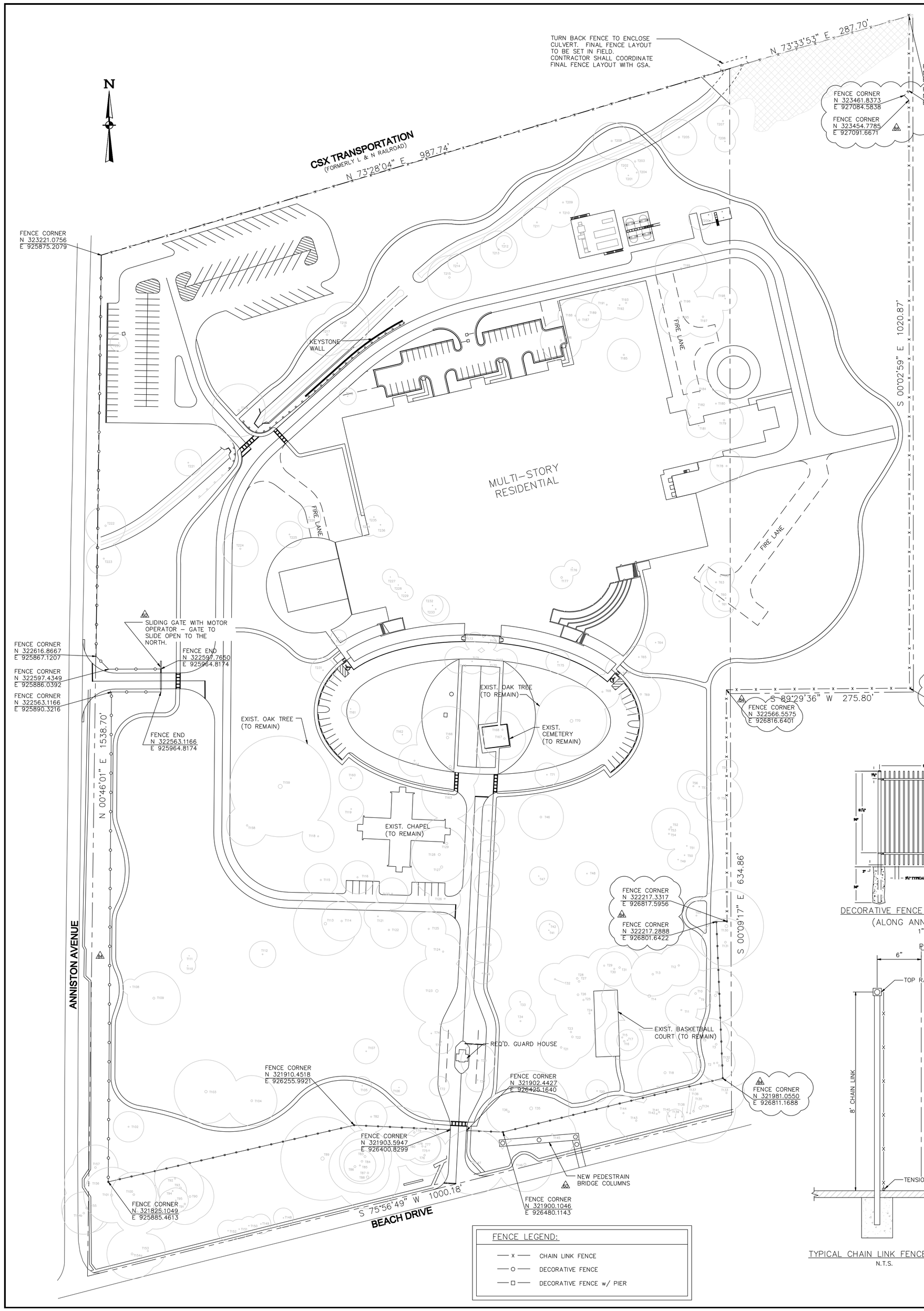

FENCE LEGEND:

- —x— CHAIN LINK FENCE
- —○— DECORATIVE FENCE
- —□— DECORATIVE FENCE w/ PIER

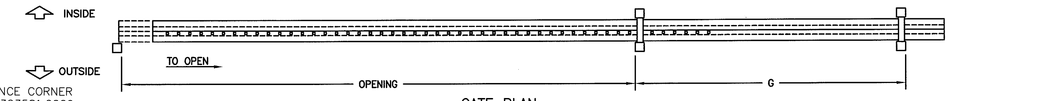

GATE PLAN

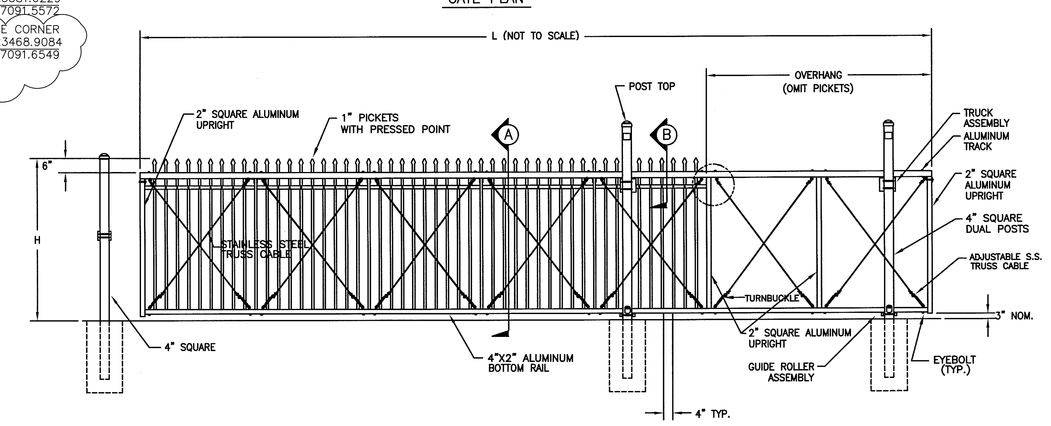

ORNAMENTAL SLIDING GATE DETAIL
N.T.S.

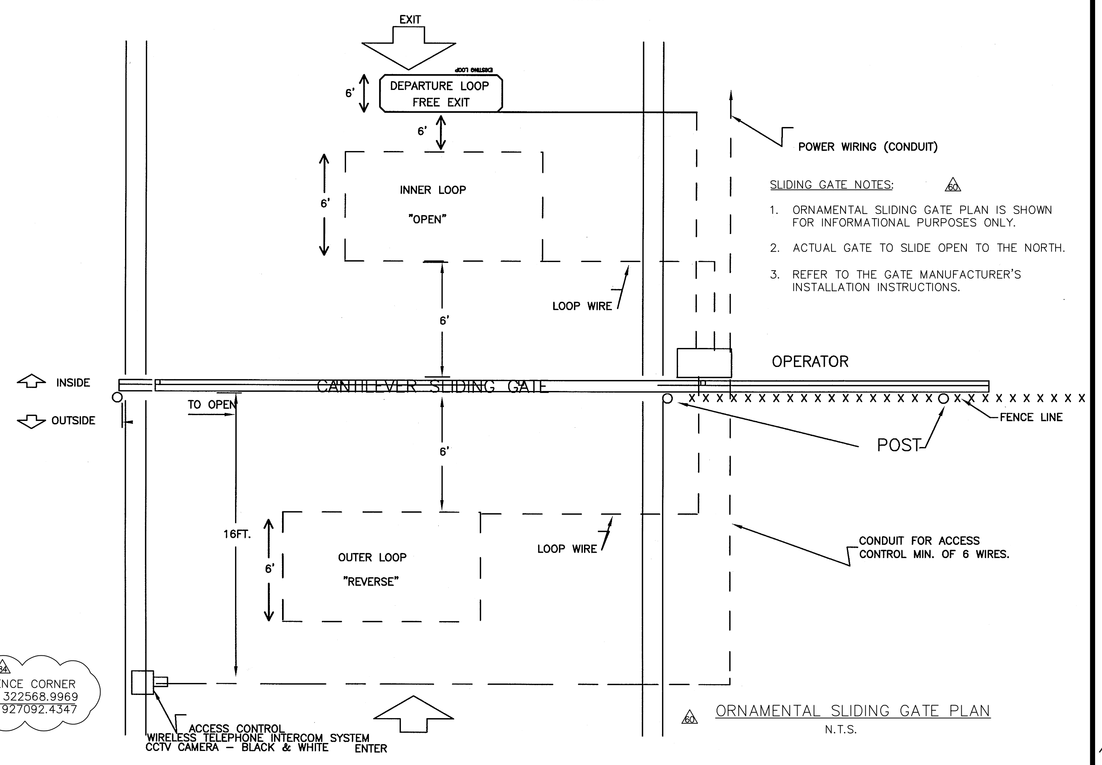

SLIDING GATE NOTES:

1. ORNAMENTAL SLIDING GATE PLAN IS SHOWN FOR INFORMATIONAL PURPOSES ONLY.
2. ACTUAL GATE TO SLIDE OPEN TO THE NORTH.
3. REFER TO THE GATE MANUFACTURER'S INSTALLATION INSTRUCTIONS.

ORNAMENTAL SLIDING GATE PLAN
N.T.S.

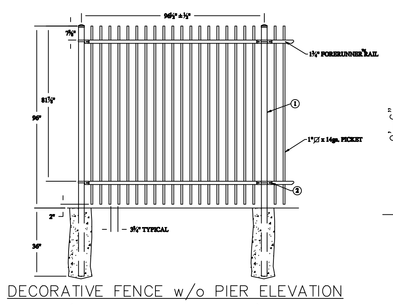

DECORATIVE FENCE w/o PIER ELEVATION
(ALONG ANNISTON AVE)
1"=40'

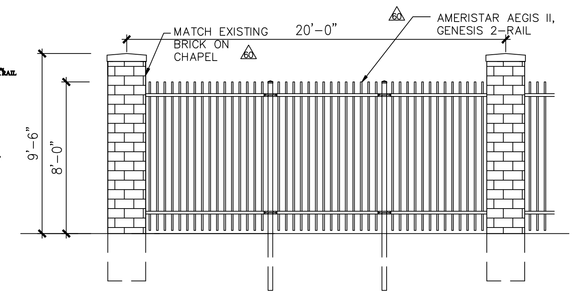

DECORATIVE FENCE w/ PIER ELEVATION
(ALONG BEACH DRIVE)
1"=40'

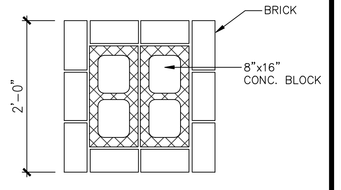

PIER DETAIL – PLAN VIEW
1"=1'-0"

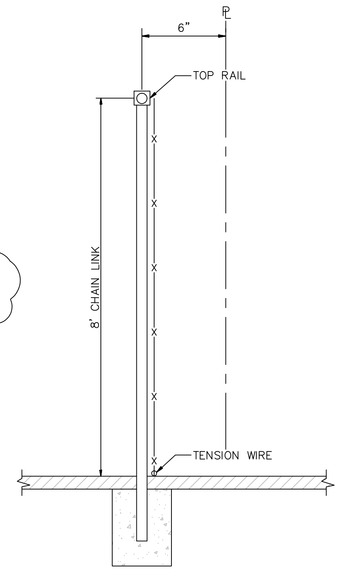

TYPICAL CHAIN LINK FENCE SECTION
N.T.S.

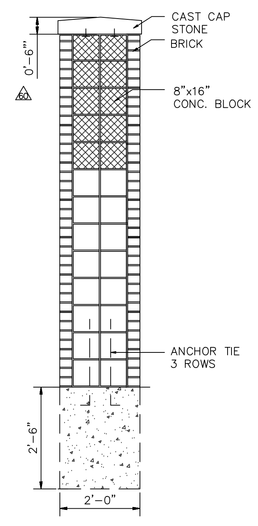

DETAIL @ PIER CROSS SECTION
N.T.S.

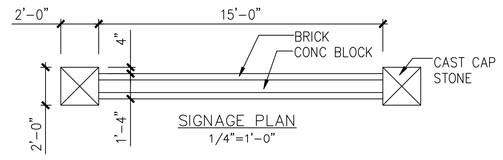

SIGNAGE PLAN
1/4"=1'-0"

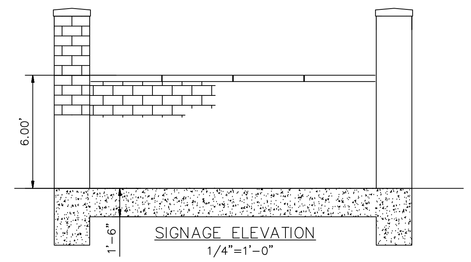

SIGNAGE ELEVATION
1/4"=1'-0"

60 0 60 120
SCALE 1"=60'

PROPERTY OF THE UNITED STATES GOVERNMENT – FOR OFFICIAL USE ONLY. Do not remove this notice. Properly destroy documents when no longer needed.

GENERAL SERVICES ADMINISTRATION
77 FORSYTH STREET
SUITE 600
ATLANTA, GA 30303
TEL: (404)331-3200

AFRH The Premier Retirement Community for America's Veterans

JACOBS
PROJECT MANAGEMENT CONSULTANT TO THE GENERAL SERVICES ADMINISTRATION

YATES CONSTRUCTION

SFCS Architecture Engineering Planning Interiors

URS CORPORATION
2020 K ST, NW
SUITE 300
WASHINGTON D.C. 20006

CERTIFICATIONS

KENNETH E. THOMAS REGISTERED PROFESSIONAL ENGINEER 8510 STATE OF MISSISSIPPI

KEY PLAN

REVISION NOTES

MARK	DATE	DESCRIPTION
A	09/08/08	ISSUED FOR CONSTRUCTION
B	12/02/08	CIVIL STRUCTURAL ARCH
C	06/04/09	ADDED SIGNAGE & DETAILS
D	08/14/09	SITE REVISIONS

GRAPHIC SCALE

CONTRACTORS	A/E CON. NO.	GS-04P-07-EX-C-0099
	A/E TASK NO.	
	CONS. CONTR.	
	CONS. WORK	
	PRIME A/E	
	SUB A/E	
	CONSTR. CON.	
BUILDING	NAME	ARMED FORCES RETIREMENT HOME
	STREET	1800 BEACH DRIVE
	CITY/ST./ZIP	GULFPORT, MS 39507
	BUILDING NO.	
	OTHER BUILDING NOs.	
	FACILITY CODE	
PROJECT	PROJECT TITLE	ARMED FORCES RETIREMENT HOME GULFPORT, MISSISSIPPI
	PROJECT DESCRIPTION	NEW CONSTRUCTION
	PROJECT NO.	31942982
	GSA PM	STEVEN SMITH
	SUBMISSION	ISSUED FOR CONSTRUCTION
	SUB. DATE	09/08/2008
DRAWING	DRAWING TITLE	FENCE LAYOUT PLAN
	FILE NAME	
	FLOOR NO.	
	DRAWN BY	DATE DRAFTED:
	CHECKED BY	SHEET SIZE: 34 X 44
	DRAWING NO.	C 3 06 (DISCIPLINE SHEET TYPE SEQUENCE)
		SHEET OF

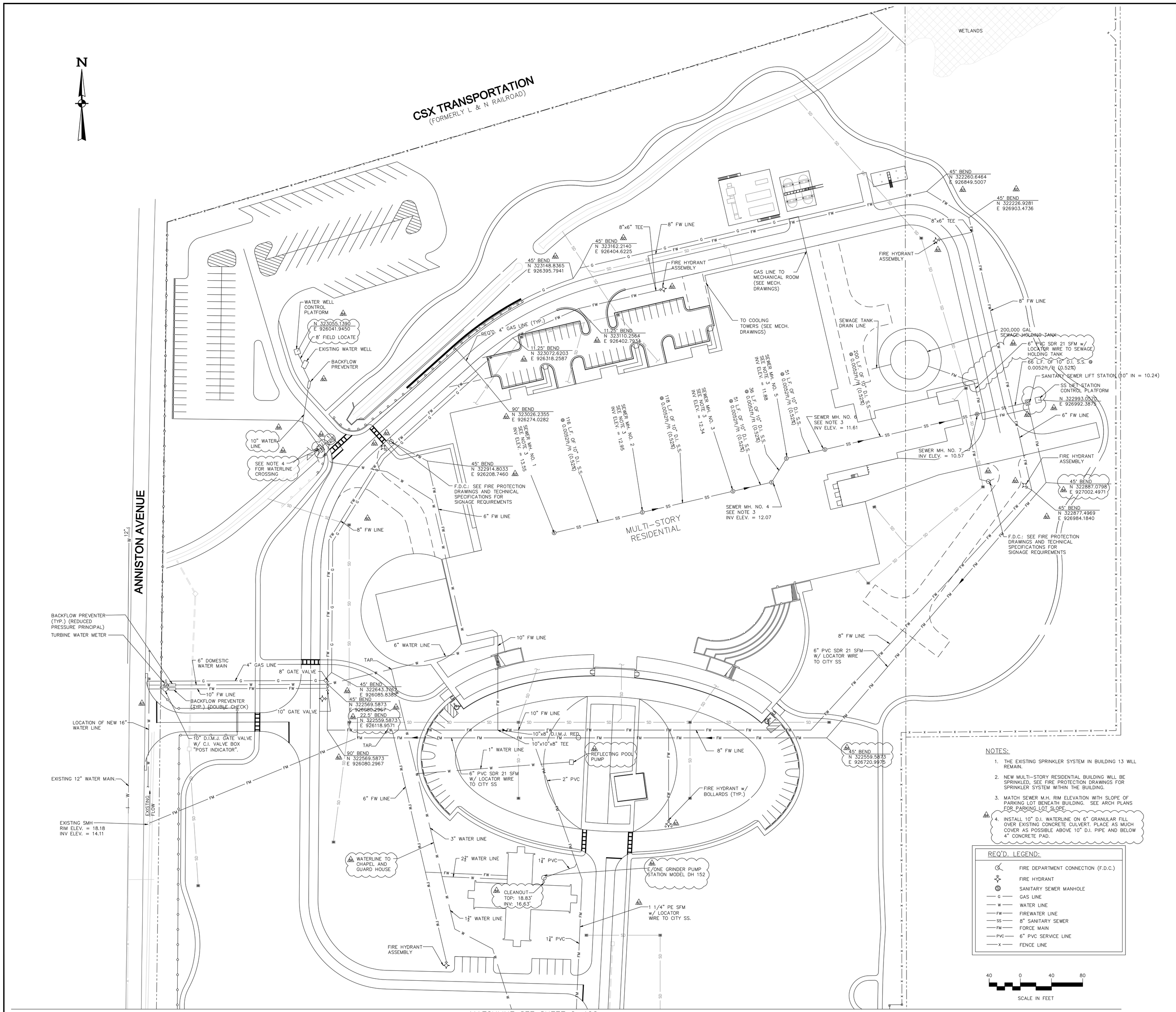

NOTES:

1. THE EXISTING SPRINKLER SYSTEM IN BUILDING 13 WILL REMAIN.
2. NEW MULTI-STORY RESIDENTIAL BUILDING WILL BE SPRINKLED, SEE FIRE PROTECTION DRAWINGS FOR SPRINKLER SYSTEM WITHIN THE BUILDING.
3. MATCH SEWER M.H. RIM ELEVATION WITH SLOPE OF PARKING LOT BENEATH BUILDING. SEE ARCH PLANS FOR PARKING LOT SLOPE.
4. INSTALL 10" D.I. WATERLINE ON 6" GRANULAR FILL OVER EXISTING CONCRETE CULVERT. PLACE AS MUCH COVER AS POSSIBLE ABOVE 10" D.I. PIPE AND BELOW 4" CONCRETE PAD.

REQ'D. LEGEND:

	FIRE DEPARTMENT CONNECTION (F.D.C.)
	FIRE HYDRANT
	SANITARY SEWER MANHOLE
—G—	GAS LINE
—W—	WATER LINE
—FW—	FIREWATER LINE
—SS—	8" SANITARY SEWER
—FM—	FORCE MAIN
—PVC—	6" PVC SERVICE LINE
—X—	FENCE LINE

40 0 40 80
SCALE IN FEET

PROPERTY OF THE UNITED STATES GOVERNMENT – FOR OFFICIAL USE ONLY. Do not remove this notice. Properly destroy documents when no longer needed.

GSA
GENERAL SERVICES ADMINISTRATION
77 FORSYTH STREET
SUITE 600
ATLANTA, GA 30303
TEL: (404)331-3200

AFRH The Premier Retirement Community for America's Veterans
JE JACOBS
PROJECT MANAGEMENT CONSULTANT TO THE GENERAL SERVICES ADMINISTRATION

YATES CONSTRUCTION

SFCS Architecture Engineering Planning Interiors

URS
URS CORPORATION
2020 K ST, NW
SUITE 300
WASHINGTON D.C. 20006

CERTIFICATIONS

KENNETH E. TRACHAS
REGISTERED PROFESSIONAL ENGINEER
No. 8510
STATE OF MISSISSIPPI
8/14/09

KEY PLAN

REVISION NOTES

MARK	DATE	DESCRIPTION
1	09/08/08	ISSUED FOR CONSTRUCTION
2	12/02/08	CIVIL STRUCTURAL ARCH
3	06/04/09	ADDED SIGNAGE & DETAILS
4	08/14/09	SITE REVISIONS

GRAPHIC SCALE

CONTRACTORS

A/E CON. NO.	GS-04P-07-EX-C-0099
A/E TASK NO.	
CONS. CONTR.	
CONS. WORK	
PRIME A/E	
SUB A/E	
CONSTR. CON.	

BUILDING

NAME	ARMED FORCES RETIREMENT HOME
STREET	1800 BEACH DRIVE
CITY/ST./ZIP	GULFPORT, MS 39507
BUILDING NO.	
OTHER	
BUILDING NOs.	
FACILITY CODE	

PROJECT

PROJECT TITLE	ARMED FORCES RETIREMENT HOME GULFPORT, MSSISSIPPI
PROJECT DESCRIPTION	NEW CONSTRUCTION
PROJECT NO.	31942982
GSA PM	STEVEN SMITH
SUBMISSION	ISSUED FOR CONSTRUCTION
SUB. DATE	09/08/2008

DRAWING

DRAWING TITLE	SANITARY SEWER & UTILITIES PLAN
FILE NAME	
FLOOR NO.	
DRAWN BY	DATE DRAFTED:
CHECKED BY	SHEET SIZE: 34 X 44
DRAWING NO.	C 4 01
	DISCIPLINE SHEET TYPE SEQUENCE
	SHEET OF

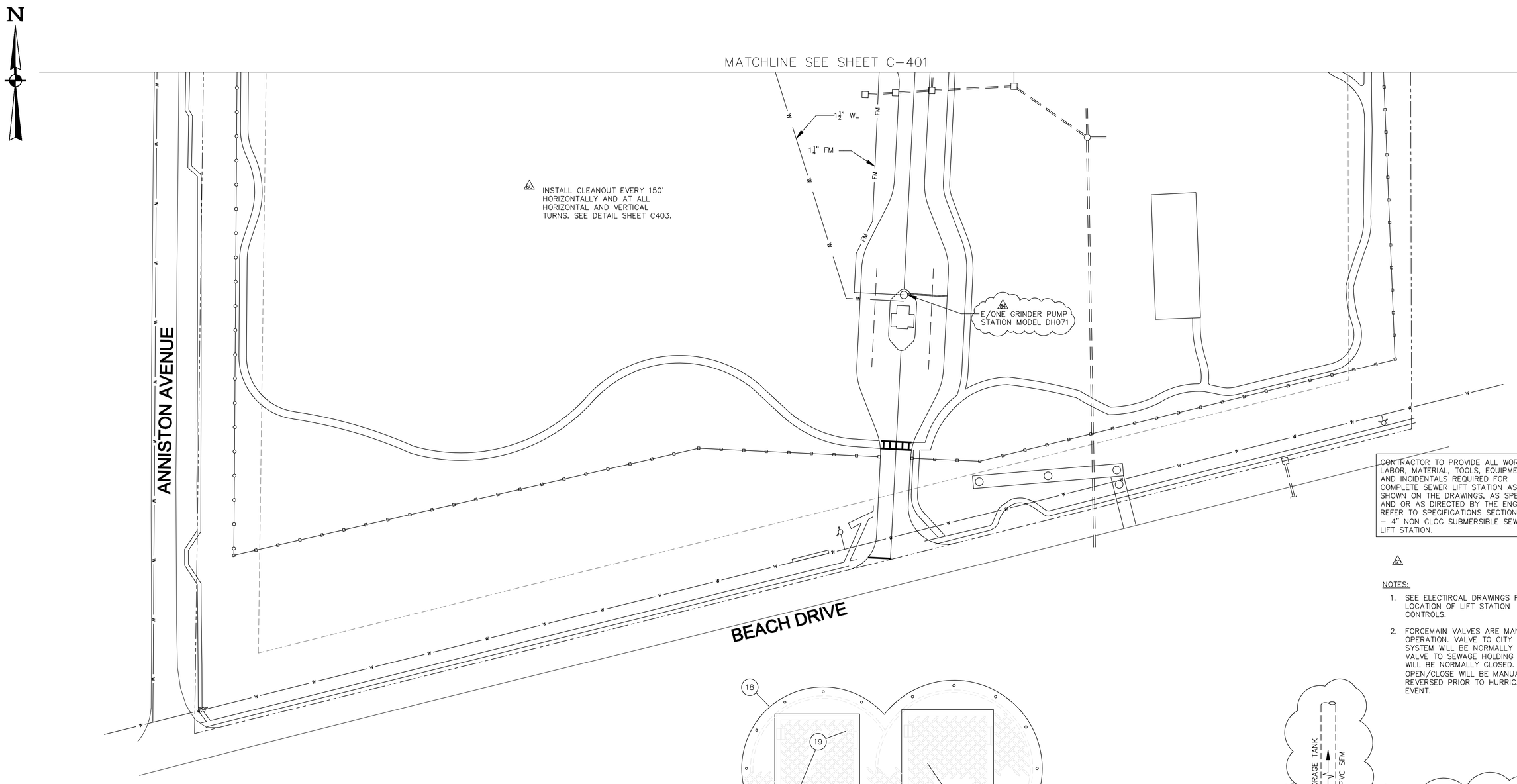

SEWER LIFT STATION LEGEND

	DESCRIPTION
1	PUMPS (2) REQUIRED
2	PUMP DISCHARGE AND ANCHORING ELBOW
3	4" FLG X FLG D.I. SPOOL
4	4" FLG D.I. 90° ELBOW
5	6" FLG X PLAIN END STAINLESS STEEL SPOOL
6	FRP PENETRATION HUB AND LINK SEAL – 4" DISCHARGE
7	4" STAINLESS STEEL CHECK VLAVE
8	4" STAINLESS STEEL OS&Y GATE VALVE
9	4" FLG S.S. 90° ELBOW
10	4"x6"x4" FLG S.S. TEE
11	2" S.S. GUIDE RAIL SYSTEM (2) EACH PUMP
12	S.S. GUIDE RAIL BRACKETS (1) EACH RAIL
13	10" D.I. GRAVITY SEWER X 16 L.F.
14	FRP PENETRATION HUB AND LINK SEAL – 10" INLET
15	FRP PENETRATION HUBS AND LINK SEALS – CONTROLS AND POWER
16	S.S. CONTROL HOUSINGS – TRANSDUCER AND FLOATS (2) EACH
17	FRP PENETRATION HUB AND LINK SEAL – 4" D.I. VENT
18	ALUMINUM WET PIT / VALVE VAULT COVER
19	VALVE VAULT HATCH
20	WET PIT HATCH
21	FOUNDATION / BEDDING
22	SELECT BACKFILL
23	FLOWABLE FILL
24	VALVE VAULT DRAIN, TRAP, BACKFLOW VALVE AND PIPING – 2" CAST IRON SOIL PIPE.

CONTRACTOR TO PROVIDE ALL WORK, LABOR, MATERIAL, TOOLS, EQUIPMENT AND INCIDENTALS REQUIRED FOR COMPLETE SEWER LIFT STATION AS SHOWN ON THE DRAWINGS, AS SPECIFIED, AND OR AS DIRECTED BY THE ENGINEER. REFER TO SPECIFICATIONS SECTION 11124 – 4" NON CLOG SUBMERSIBLE SEWER LIFT STATION.

NOTES:

1. SEE ELECTIRCAL DRAWINGS FOR LOCATION OF LIFT STATION CONTROLS.
2. FORCEMAIN VALVES ARE MANUAL OPERATION. VALVE TO CITY SEWER SYSTEM WILL BE NORMALLY OPENED. VALVE TO SEWAGE HOLDING TANK WILL BE NORMALLY CLOSED. VALVE OPEN/CLOSE WILL BE MANUALLY REVERSED PRIOR TO HURRICANE EVENT.

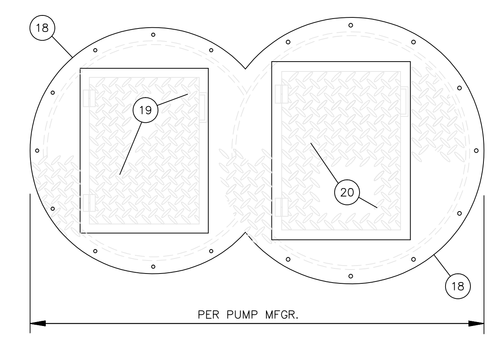

SEWER LIFT STATION COVER AND HATCH PLAN
NOT TO SCALE

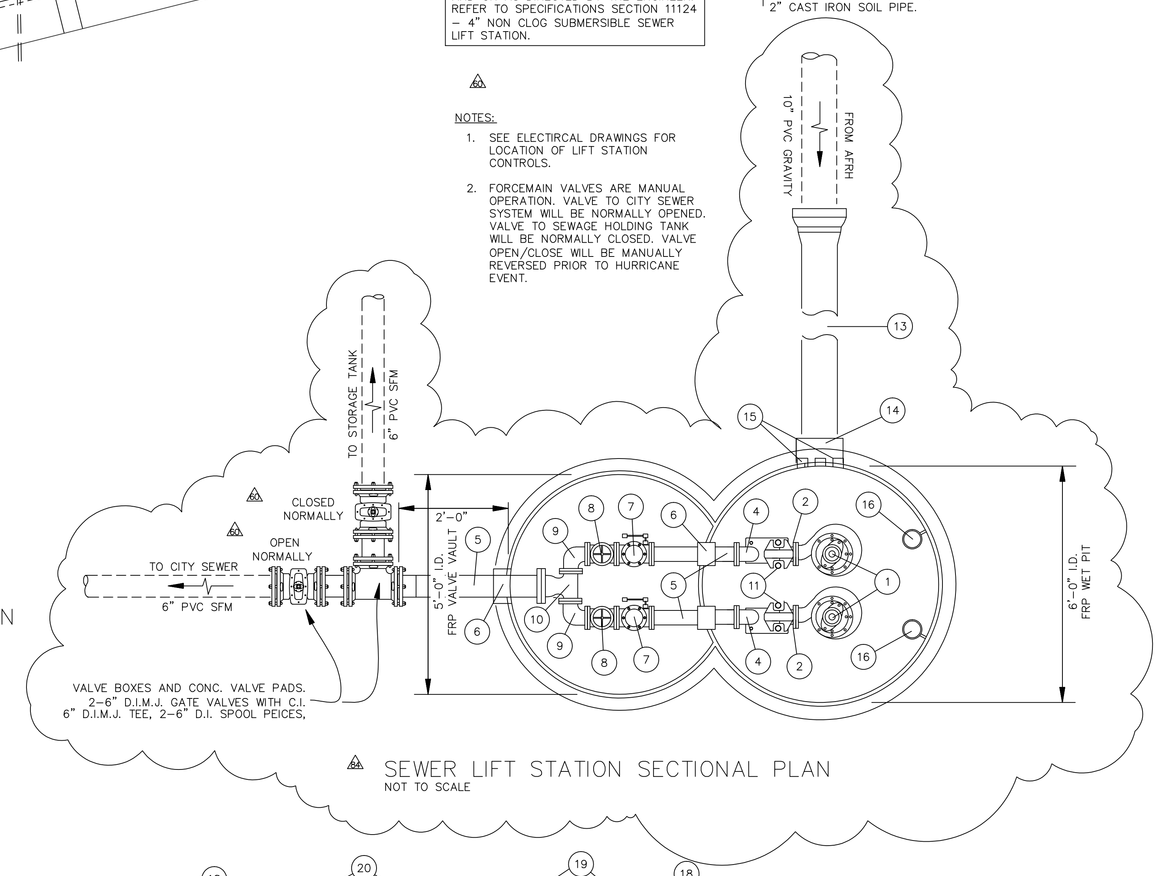

SEWER LIFT STATION SECTIONAL PLAN
NOT TO SCALE

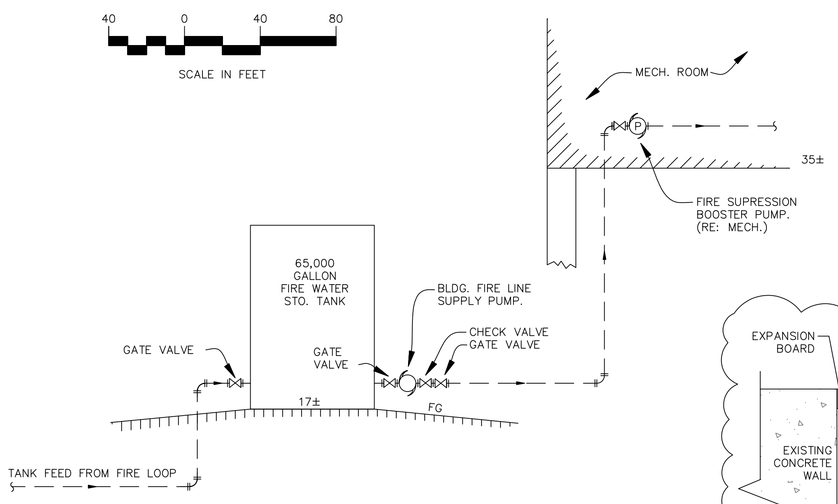

FIRE SUPRESSION SUPPLY SCHEMATIC
NOT TO SCALE

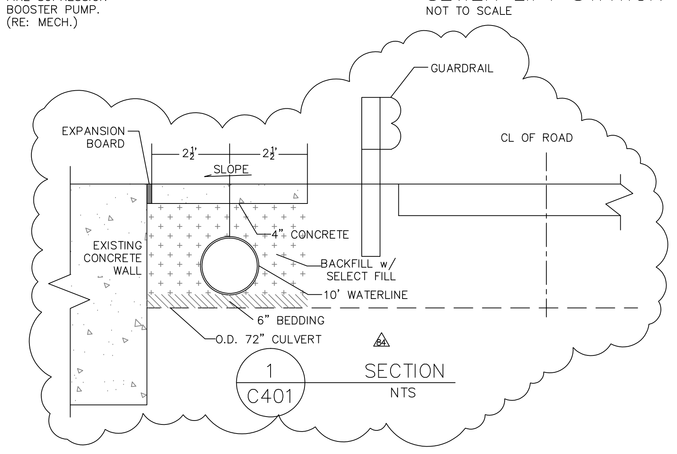

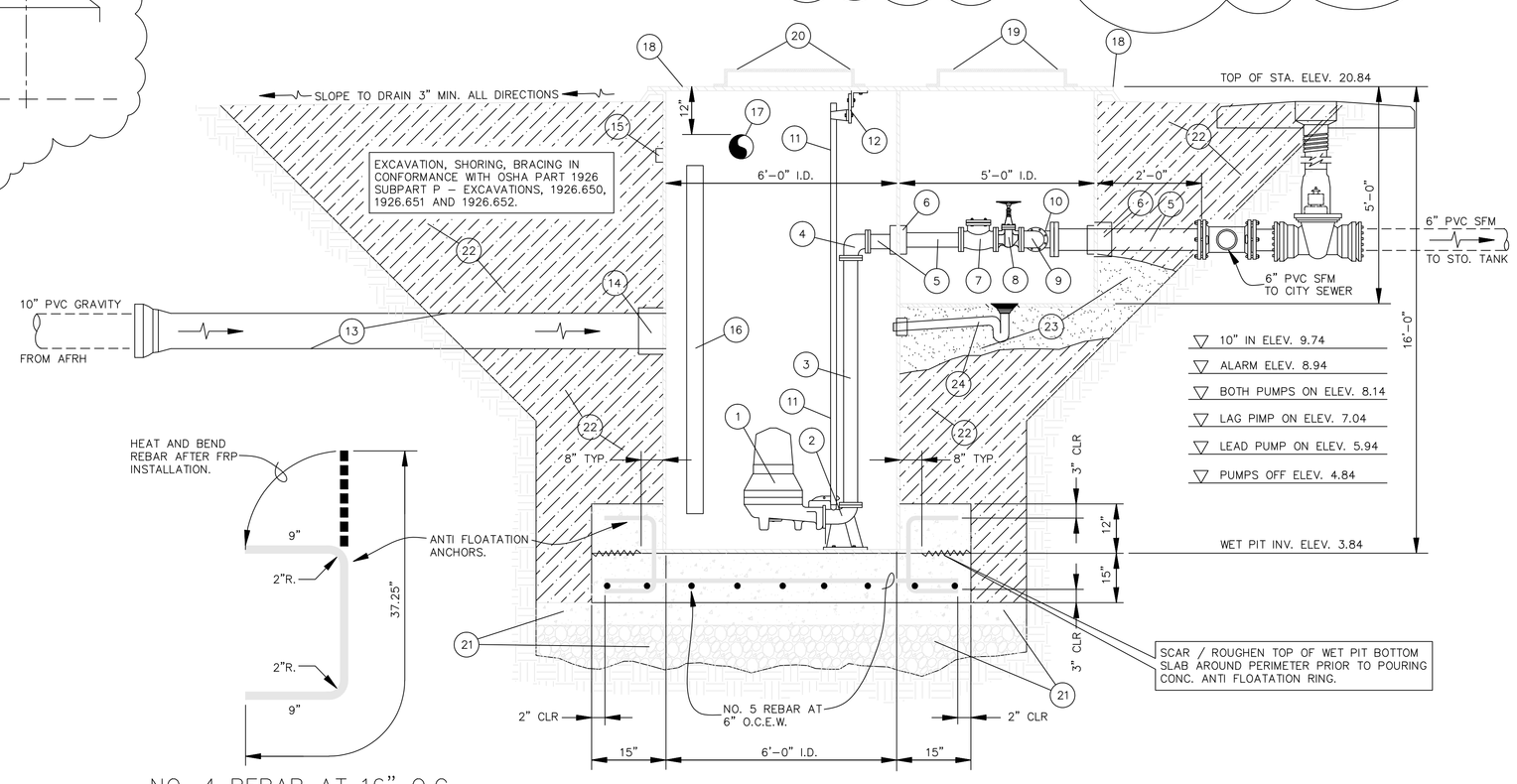

NO. 4 REBAR AT 16" O.C.
NOT TO SCALE

SEWER LIFT STATION SECTIONAL ELEVATION
NOT TO SCALE

UTILITY CONTACTS:

WATER:	CITY OF GULFPORT P.O. BOX 1780 GULFPORT, MS 39507 228-868-5700	ELECTRICTY:	MISSISIPPI POWER CO. 2291 W. BEACH ROAD GULFPORT, MS MIKE JOHNSON 228-0703
SEWER:	CITY OF GULFPORT P.O. BOX 1780 GULFPORT, MS 39507 MICHAEL BELL 228-868-5765	TELEPHONE:	AT&T 15243 CROSSROADS PARKWAY GULFPORT, MS 39507 228-701-2400 TRENT LEE 228-863-0672
GAS:	CENTER POINT ENTERGY 2019 E. PASS ROAD GULFPORT, MS 39507 LINDA CHERRY 228-896-9219 EXT. 244	CABLE:	CABLE ONE 283 DUBYS ROAD GULFPORT, MS 39507 228-701-2400 RON BARN 228-864-1406

GENERAL NOTES:

1. FOR EXACT UTILITY ENTRY LOCATIONS TO THE BUILDING, SEE ARCHITECTURAL PLANS.
2. THE CONTRACTOR SHALL BE RESPONSIBLE FOR DETERMINING THE EXACT LOCATION, DEPTH AND SIZE OF ALL UNDERGROUND UTILITIES AND STRUCTURES AND SHALL BE LIABLE FOR ANY DAMAGE CAUSED BY FAILURE TO COMPLY WITH THESE INSTRUCTIONS.
3. A PERMIT SHALL BE OBTAINED FROM CITY-PARISH DEPARTMENT OF PUBLIC WORKS SUBDIVISION ENGINEERING DIVISION PRIOR TO CONNECTION TO EXISTING SANITARY SEWER LINE.
4. LOCATION & INSTALLATION OF SITE UTILITIES SHALL BE VERIFIED WITH PROPER UTILITY COMPANY PROVIDING SERVICE.
5. THE CONTRACTOR IS RESPONSIBLE FOR MAINTAINING PROPER SEPARATION BETWEEN SANITARY SEWER SERVICE LINE AND WATER SERVICE LINE.
6. THE CONTRACTOR SHALL REPAIR ANY PAVEMENT DESIGNATED TO REMAIN THAT'S DAMAGED DURING CONSTRUCTION. THIS SHALL BE DONE AT NO DIRECT PAY.
7. THE CONTRACTOR SHALL BE RESPONSIBLE FOR COORDINATING UTILITY INTERFACE WITH BUILDING TIE IN.
8. THE CONTRACTOR SHALL BE RESPONSIBLE FOR COORDINATING CONDUIT SIZE AND LOCATION OF UTITLTIES WITH RESPECTIVE UTILITY COMPANIES.

REQ'D. LEGEND:

	FIRE DEPARTMENT CONNECTION (F.D.C.)
	FIRE HYDRANT
	SANITARY SEWER MANHOLE
G	GAS LINE
W	WATER LINE
FW	FIREWATER LINE
SS	8" SANITARY SEWER
PVC	6" PVC SERVICE LINE
X	FENCE LINE

SANITARY SEWER MANHOLES

STRUCTURE #	TOP	INVERT
MH-1	SEE ARCH.	13.55'
MH-2	SEE ARCH.	12.95'
MH-3	SEE ARCH.	12.34'
MH-4	SEE ARCH.	12.07'
MH-5	SEE ARCH.	11.88'
MH-6	SEE ARCH.	11.61'
MH-7	SEE ARCH.	10.07'
LS-1	SEE ARCH.	9.74'

SANITARY SEWER PIPE CHART

FROM	TO	LENGTH	SIZE	SLOPE
MH-1	MH-2	116.00'	10"ø	0.52%
MH-2	MH-3	118.00'	10"ø	0.52%
MH-3	MH-4	51.00'	10"ø	0.52%
MH-4	MH-5	36.00'	10"ø	0.52%
MH-5	MH-6	51.00'	10"ø	0.52%
MH-6	MH-7	200.00'	10"ø	0.52%
MH-7	LS-1	66.00'	10"ø	0.52%

GSA
GENERAL SERVICES ADMINISTRATION
77 FORSYTH STREET
SUITE 600
ATLANTA, GA 30303
TEL: (404)331-3200

AFRH The Premier Retirement Community for America's Veterans
JE JACOBS
PROJECT MANAGEMENT CONSULTANT TO THE GENERAL SERVICES ADMINISTRATION

YATES CONSTRUCTION

SFCS Architecture Engineering Planning Interiors

URS
URS CORPORATION
2020 K ST, NW
SUITE 300
WASHINGTON D.C. 20006

CERTIFICATIONS

KEY PLAN

REVISION NOTES

MARK	DATE	DESCRIPTION
A	09/08/08	ISSUED FOR CONSTRUCTION
B	12/02/08	CIVIL STRUCTURAL ARCH
C	06/04/09	ADDED SIGNAGE & DETAILS
D	08/14/09	SITE REVISIONS

GRAPHIC SCALE

CONTRACTORS	A/E CON. NO. GS-04P-07-EX-C-0099
	A/E TASK NO.
	CONS. CONTR.
	CONS. WORK
	PRIME A/E
	SUB A/E
	CONSTR. CON.
BUILDING	NAME: ARMED FORCES RETIREMENT HOME
	STREET: 1800 BEACH DRIVE
	CITY/ST./ZIP: GULFPORT, MS 39507
	BUILDING NO.
	OTHER BUILDING NOs.
	FACILITY CODE
PROJECT	PROJECT TITLE: ARMED FORCES RETIREMENT HOME GULFPORT, MISSISSIPPI
	PROJECT DESCRIPTION: NEW CONSTRUCTION
	PROJECT NO. 31942982
	GSA PM: STEVEN SMITH
	SUBMISSION: ISSUED FOR CONSTRUCTION
	SUB. DATE: 09/08/2008
DRAWING	DRAWING TITLE: SANITARY SEWER & UTILITIES PLAN
	FILE NAME
	FLOOR NO.
	DRAWN BY: DATE DRAFTED:
	CHECKED BY: SHEET SIZE: 34 X 44
	DRAWING NO. C 4 02 (DISCIPLINE SHEET TYPE SEQUENCE) SHEET OF

PROPERTY OF THE UNITED STATES GOVERNMENT – FOR OFFICIAL USE ONLY. Do not remove this notice. Properly destroy documents when no longer needed.

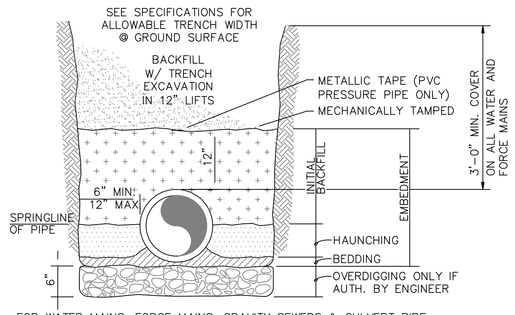

FOR WATER MAINS, FORCE MAINS, GRAVITY SEWERS & CULVERT PIPE

PIPE EMBEDMENT AND BACKFILL

SHOULD ENGINEER DETERMINE THAT THE NATIVE MATERIAL AT THE BOTTOM OF THE TRENCH IS NOT A SUITABLE FOUNDATION FOR THE PIPE, HE MAY AUTHORIZE OVERDIGGING THE TRENCH A DEPTH OF 6 INCHES AND REPLACE WITH A SUITABLE FOUNDATION MATERIAL WHICH IS INCLUDED IN THE CONTRACT AS A PAY ITEM.

GENERALLY, LOOSE MATERIAL LEFT BY THE EXCAVATOR ON THE TRENCH BOTTOM AND SOFT MATERIAL SHAVED FROM THE TRENCH EXCAVATION WILL BE ADEQUATE FOR BEDDING THE PIPE SO THAT IT IS FULLY SUPPORTED.

THE HAUNCHING MATERIAL SHALL BE SELECT MATERIAL SECURED FROM THE TRENCH EXCAVATION AND THOROUGHLY COMPACTED TO THE SPRING LINE OF THE PIPE AND EXTENDING TO THE SIDE WALLS OF THE TRENCH. A MINIMUM 90 PERCENT STANDARD PROCTOR WILL BE CONSIDERED ADEQUATE COMPACTION.

THE INITIAL BACKFILL (SELECT MATERIAL SECURED FROM THE TRENCH EXCAVATION) MAY THEN PROCEED TO A HEIGHT OF 12 INCHES ABOVE THE TOP OF THE PIPE AND MECHANICALLY TAMPED. FURTHER BACKFILL SHALL NOT PROCEED UNTIL INITIAL BACKFILL HAS BEEN OBSERVED BY ENGINEER.

SHOULD ENGINEER DETERMINE THAT THE SELECT MATERIAL SECURED FROM THE TRENCH EXCAVATION IS NOT SUITABLE FOR EMBEDMENT AND/OR BACKFILL, HE MAY AUTHORIZE THE USE OF A SUITABLE BACKFILL MATERIAL WHICH IS INCLUDED IN THE CONTRACT AS A PAY ITEM.

FURTHER BACKFILL MAY THEN PROCEED TO THE ORIGINAL GROUND SURFACE IN 12 INCH LIFTS COMPACTED TO ELIMINATE AIR VOIDS. IN AREAS WHERE THE GROUND SURFACE IS TO RECEIVE PAVEMENT, A MINIMUM 90 PERCENT STANDARD PROCTOR FOR EACH LIFT SHALL BE CONSIDERED ADEQUATE COMPACTION.

CONTRACTOR SHALL MAINTAIN TRENCH BACKFILL AT ORIGINAL GROUND SURFACE UNTIL FINAL ACCEPTANCE OF THE WORK.

ALL SURPLUS MATERIALS NOT USED IN BACKFILLING SHALL BE REMOVED AND DISPOSED OF BY CONTRACTOR AT HIS OWN EXPENSE.

METALLIC TAPE WILL BE PLACED IN THE BACKFILL 12 INCHES ABOVE THE TOP OF PVC WATER MAINS AND SEWAGE FORCE MAINS WITH LETTERING FACING UP. PVC SANITARY SEWERS DO NOT REQUIRE MARKING TAPE.

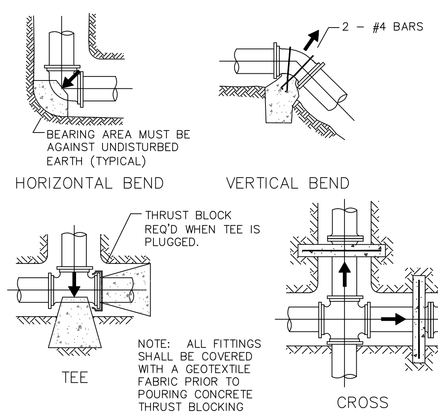

BEARING AREAS FOR THRUST BLOCKING IN SQUARE FEET						
FITTING:	4" DIA.	6" DIA.	8" DIA.	10" DIA.	12" DIA.	14" DIA.
TEES	2.0	2.5	4.7	5.0	7.0	9.0
90°	2.0	2.7	6.7	7.2	10.4	12.7
45°	1.0	1.5	3.6	3.9	5.6	6.9
22 1/2°	1.0	1.0	1.8	2.0	2.9	3.5

WATER MAIN THRUST BLOCKING

NTS

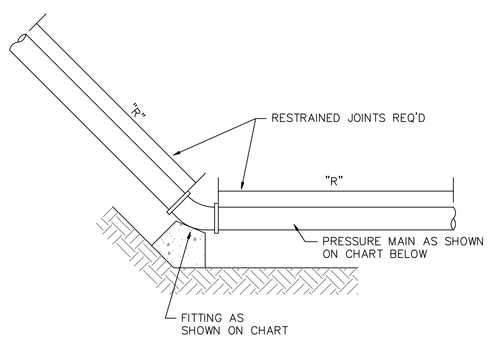

DISTANCE "R" REQUIREMENTS								
FITTINGS	6"	8"	10"	12"	14"	16"	18"	24"
90° BEND	14'	18'	25'	28'	29'	33'	37'	47'
45° BEND	6'	7'	10'	12'	12'	14'	15'	20'
22.5° BEND	3'	4'	5'	6'	6'	7'	7'	10'
11.25° BEND	0'	2'	3'	3'	3'	4'	4'	5'
45° VERT. DOWN	0'	4'	4'	6'	7'	10'	13'	23'
DEAD END	32'	49'	60'	79'	69'	78'	87'	112'

HORIZONTAL & VERTICAL BEND

RESTRAINED JOINT DISATANCE "R"

NTS

NOTES:

RESTRAINED JOINT PIPE SHALL BE USED AT ALL BENDS WITH THRUST BLOCKS.

THE LENGTH OF RESTRAINED PIPE ON EACH SIDE OF THE FITTINGS AND VALVES SHALL NOT BE LESS THAN "R" DISTANCE GIVEN IN THE TABLE.

THE FIRST JOINT OF THE PIPE BEYOND THE DISTANCE "R" SHOWN IN THE TABLE SHALL BE RESTRAINED ALONG WITH ALL JOINTS WITHIN THE DISTANCE "R".

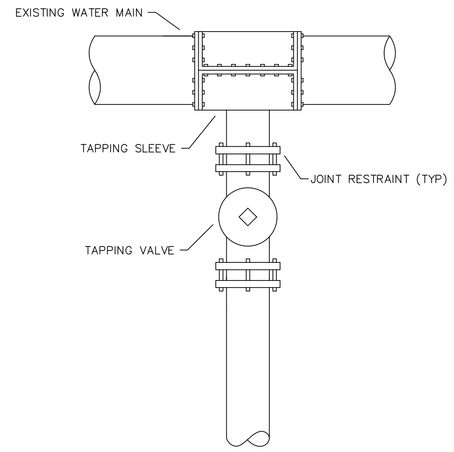

TAPPING VALVE & SLEEVE DETAIL

NTS

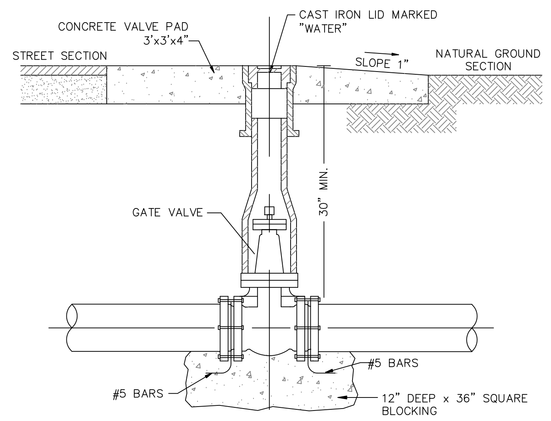

TYPICAL GATE VALVE ASSEMBLY

NTS

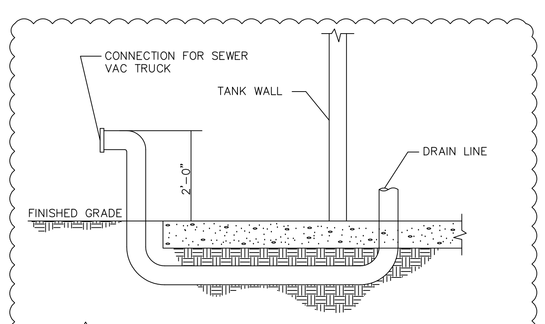

SEWAGE HOLDING TANK DRAIN LINE

NTS

NOTES:

ALL JOINTS SHALL BE RESTRAINED WITHIN LIMITS OF ADJUSTMENTS PLUS "R" FEET ON EACH END OF ADJUSTMENTS (SEE TABLE THIS PAGE).

EACH MECHANICAL JOINT FITTING AND/OR RESTRAINT DEVICE SHALL BE WRAPPED IN 8 MIL POLYETHYLENE ENCASEMENT.

THRUST BLOCKING SHALL BE USED ON ALL BEND WITHIN ADJUSTMENT.

WHEN SEWER FORCE MAINS CROSS WATER LINES THE SEWER FORCE MAIN SHALL CROSS BENEATH THE WATER LINE.

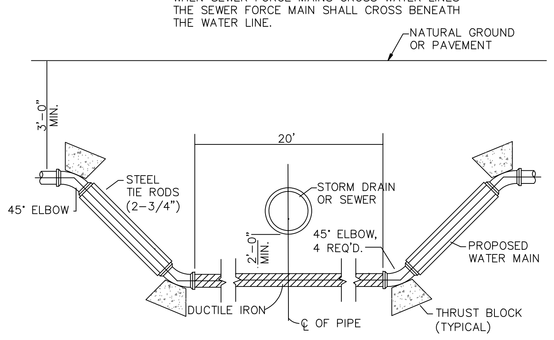

UTILITY MAIN ADJUSTMENT

NTS

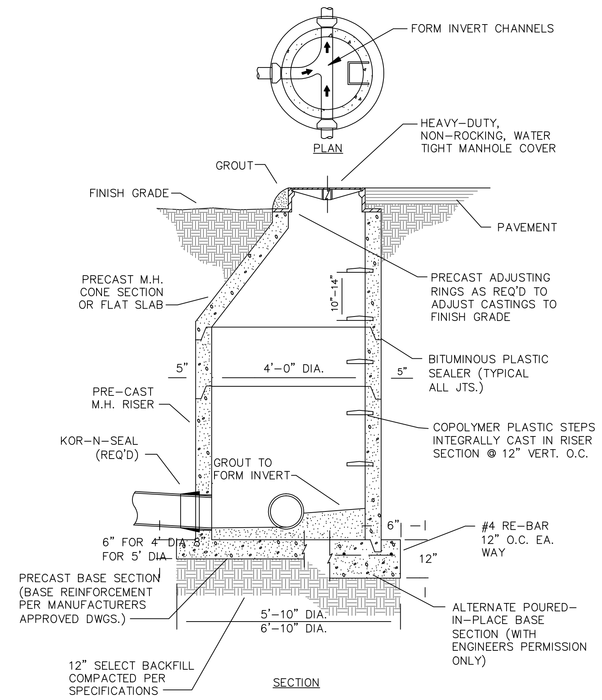

SANITARY SEWER MANHOLE DETAIL

NTS

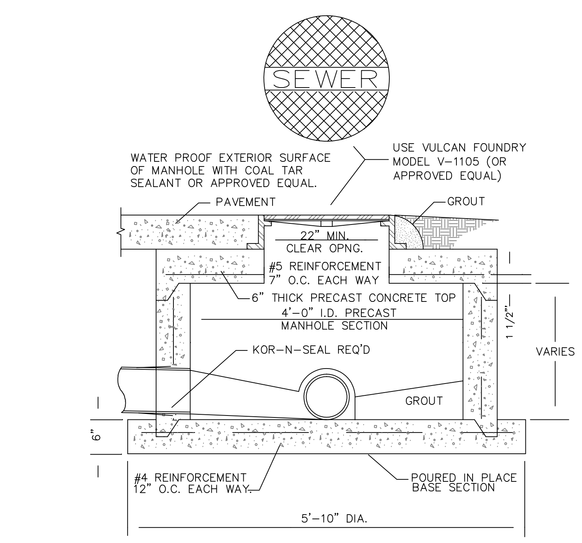

SHALLOW SEWER MANHOLE

NTS

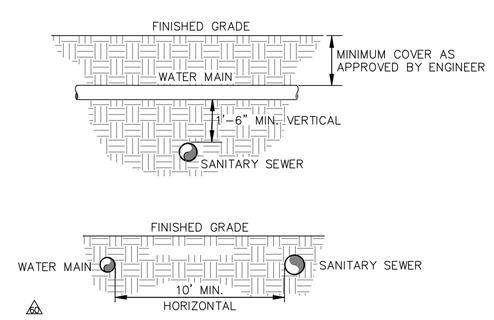

WATER & SEWER MAIN CLEARANCES

NTS

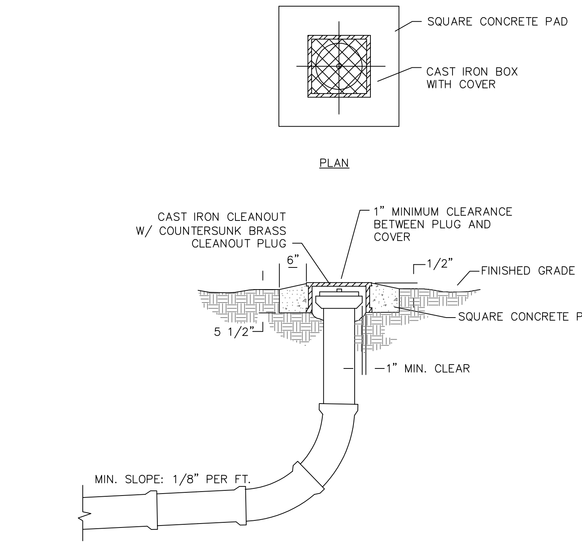

SEWER CLEANOUT

NTS

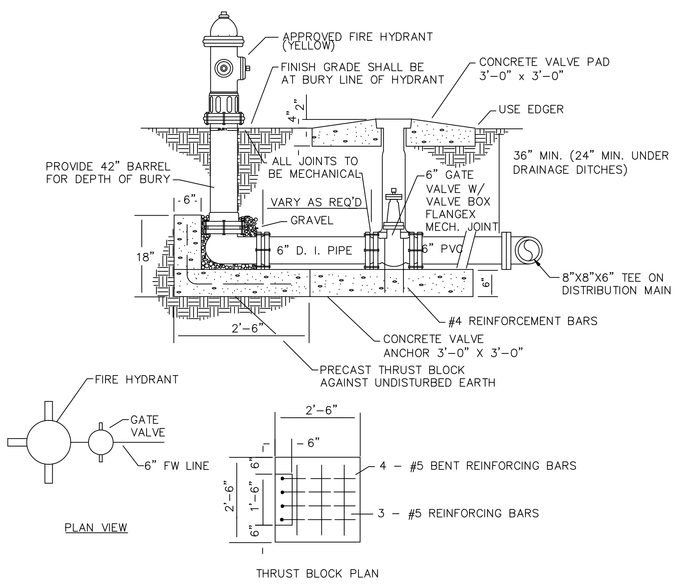

FIRE HYDRANT ASSEMBLY

NTS

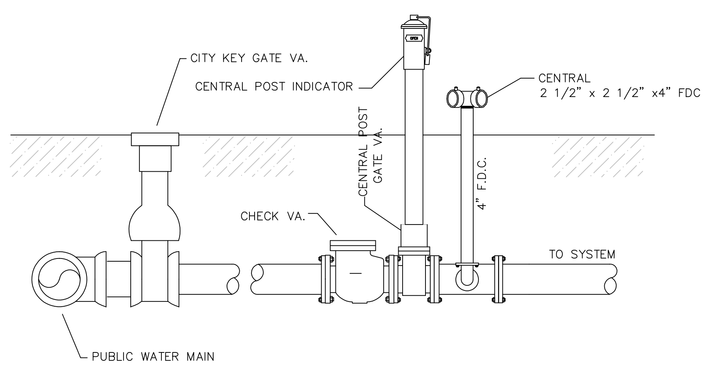

TYPICAL UNDERGROUND FIRE PROTECTION SERVICE

NTS

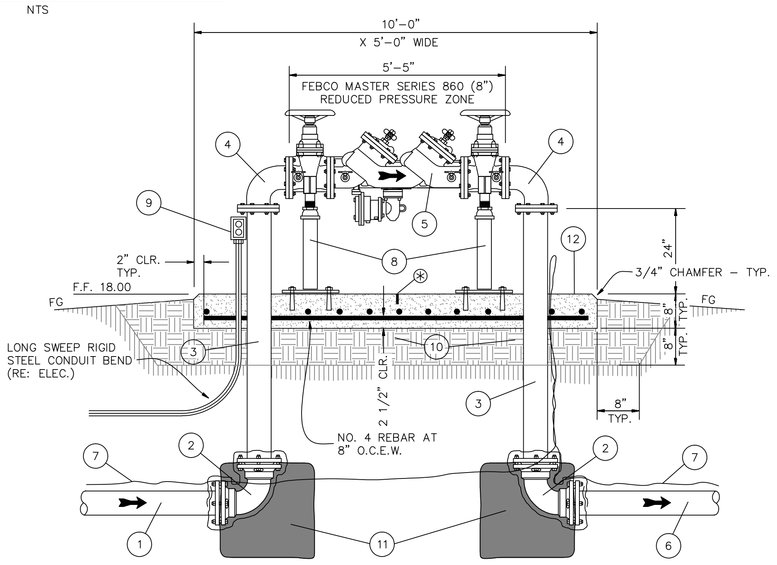

BACKFLOW PREVENTER DETAIL

NTS

⊛ SAW CUT JOINT AT MID POINT OF SLAB 2" DEEP MINIMUM.

BACKFLOW PREVENTER LEGEND

	DESCRIPTION
1	8" PVC C900 WATER SUPPLY FORM CITY MAIN.
2	8" D.I.M.J. 90° ELBOW WITH POLYWRAP.
3	8" D.I. FLG. X PLAIN END SPOOL.
4	8" D.I. FLG. 90° ELBOW – ANSI B16.1 CLASS 125.
5	8" REDUCED PRESSURE BACKFLOW PREVENTER.
6	8" PVC C900 WATER SUPPLY TO AFRH.
7	14 GA. CU. STRANDED LOCATOR WIRE.
8	PIPE SUPPORTS AND ANCHORS.
9	DUPLEX RECEPT. (RE: ELECTRICAL)
10	8" SELECT BASE – 95% STD. ASTM D 698.
11	VERTICAL CONC. THRUST BLOCKING.
12	8" TH. P.C.C. SLAB – CL. A.

PROPERTY OF THE UNITED STATES GOVERNMENT – FOR OFFICIAL USE ONLY. Do not remove this notice. Properly destroy documents when no longer needed.

GENERAL SERVICES ADMINISTRATION
77 FORSYTH STREET
SUITE 600
ATLANTA, GA 30303
TEL: (404)331-3200

AFRH The Premier Retirement Community for America's Veterans

JACOBS
PROJECT MANAGEMENT CONSULTANT TO THE GENERAL SERVICES ADMINISTRATION

YATES CONSTRUCTION

SFCS Architecture Engineering Planning Interiors

URS CORPORATION
2020 K ST, NW
SUITE 300
WASHINGTON D.C. 20006

CERTIFICATIONS

KENNETH E. THOMAS REGISTERED PROFESSIONAL ENGINEER 24310 STATE OF MISSISSIPPI

KEY PLAN

REVISION NOTES

MARK	DATE	DESCRIPTION
A	09/08/08	ISSUED FOR CONSTRUCTION
B	12/02/08	CIVIL STRUCTURAL ARCH
C	06/04/09	ADDED SIGNAGE & DETAILS
D	08/14/09	SITE REVISIONS

GRAPHIC SCALE

CONTRACTORS	
A/E CON. NO.	GS-04P-07-EX-C-0099
A/E TASK NO.	
CONS. CONTR.	
CONS. WORK	
PRIME A/E	
SUB A/E	
CONSTR. CON.	

BUILDING	
NAME	ARMED FORCES RETIREMENT HOME
STREET	1800 BEACH DRIVE
CITY/ST./ZIP	GULFPORT, MS 39507
BUILDING NO.	
OTHER	
BUILDING NOs.	
FACILITY CODE	

PROJECT	
PROJECT TITLE	ARMED FORCES RETIREMENT HOME GULFPORT, MISSISSIPPI
PROJECT DESCRIPTION	NEW CONSTRUCTION
PROJECT NO.	31942982
GSA PM	STEVEN SMITH
SUBMISSION	ISSUED FOR CONSTRUCTION
SUB. DATE	09/08/2008

DRAWING	
DRAWING TITLE	SEWER & WATER DETAILS
FILE NAME	
FLOOR NO.	
DRAWN BY	DATE DRAFTED:
CHECKED BY	SHEET SIZE: 34 X 44
DRAWING NO.	C 4 03 (DISCIPLINE SHEET TYPE SEQUENCE)
	SHEET OF

STRUCTURE CHART

STRUCTURE #	TYPE	STANDARD	TOP	INVERT
A–1	OPEN TOP INLET	24"x24"	16.75'	8.78'
A–2	OPEN TOP INLET	24"x24"	16.75'	9.16'
A–3	OPEN TOP INLET	24"x24"	18.25'	9.60'
A–4	18x15 WYE	---	---	9.86'
A–5	OPEN TOP INLET	24"x24"	18.25'	10.04'
A–6	OPEN TOP INLET	24"x24"	19.50'	10.39'
A2–1	OPEN TOP INLET	24"x24"	17.50'	9.47'
A3–1	ROOF DRAIN	---	---	14.50'
A4–1	ROOF DRAIN	---	---	14.50'
A5–1	ROOF DRAIN	---	---	14.50'
A3–2	OPEN TOP INLET	24"x24"	18.25'	14.50'
A5–2	OPEN TOP INLET	24"x24"	18.25'	14.50'
B1	OPEN TOP INLET	24"x24"	18.50'	10.38'
B2	18x15 WYE	---	---	10.42'
B3	OPEN TOP INLET	24"x24"	18.50'	10.63'
B1–1A	ROOF DRAIN	---	---	14.50'
B1–1B	ROOF DRAIN	---	---	14.00'
B1–1C	24x15 WYE	---	---	10.13'
B1–1	ROOF DRAIN	---	---	14.50'
B2–1	ROOF DRAIN	---	---	14.50'
B3–1	ROOF DRAIN	---	---	14.50'
C1	OPEN TOP INLET	24"x24"	18.25'	10.98'
C2	OPEN TOP INLET	24"x24"	19.75'	11.37'
C3	OPEN TOP INLET	24"x24"	19.50'	11.63'
C4	OPEN TOP INLET	24"x24"	19.50'	12.04'
C2–1	ROOF DRAIN	---	---	14.50'
C4–1	ROOF DRAIN	---	---	14.50'
C5–1	OPEN TOP INLET	24"x24"	19.50'	12.04'
D1	OPEN TOP INLET	24"x24"	17.50'	14.62'
E1	OPEN TOP INLET	24"x24"	17.80'	13.96'
E1–1	OPEN TOP INLET	24"x24"	17.75'	14.15'

PIPE CHART

FROM	TO	LENGTH	SIZE	PIPE SLOPE %	Q10 (cfs)	CAP. (cfs)
A–1	A	104'	30"	0.20	22.90	23.91
A–2	A–1	192'	30"	0.20	22.00	23.91
A–3	A–2	218'	24"	0.20	15.70	13.18
A–4	A–3	132'	24"	0.20	9.60	13.18
A–5	A–4	92'	18"	0.20	7.20	6.12
A–6	A–5	178'	15"	0.20	1.50	3.76
A2–1	A–2	154'	15"	0.20	4.50	3.76
A3–1	A–3	72'	15"	0.20	2.80	3.76
A3–2	A–3	100'	12"	0.20	1.73	3.76
A4–1	A–4	74'	15"	0.20	2.40	3.76
A5–1	A–5	58'	15"	0.20	2.40	3.76
A5–2	A–5	100'	12"	0.20	1.73	1.50
B–1	B1–1C	68'	24"	0.20	8.00	13.18
B–2	B–1	44'	18"	0.20	3.80	6.12
B–3	B–2	82'	18"	0.20	2.20	6.12
B1–1A	B1–1B	32'	15"	0.20	3.60	3.76
B1–1C	B	64'	24"	0.20	8.00	13.18
B1–1B	B1–1C	172'	15"	0.20	3.60	3.76
B1–1	B–1	78'	15"	0.20	1.60	3.76
B2–1	B–2	78'	15"	0.20	1.60	3.76
B3–1	B–3	104'	15"	0.20	1.60	3.76

PIPE CHART

FROM	TO	LENGTH	SIZE	PIPE SLOPE %	Q10 (cfs)	CAP. (cfs)
C–1	C	238'	24"	0.20	7.70	13.18
C–2	C–1	200'	18"	0.20	4.70	6.12
C–3	C–2	128'	18"	0.20	4.10	6.12
C–4	C–3	206'	15"	0.20	4.10	3.76
C4–1	C–4	32'	15"	0.20	1.50	3.76
C5–1	C–5	72'	12"	0.20	1.50	1.75
C2–1	C–2	26'	15"	0.20	0.80	3.76
D–1	EX. INLET	198'	15"	0.20	1.50	3.76
E1–1	E–1	94'	12"	0.20	1.50	1.75
E–1	EX. INLET	126'	15"	0.20	3.00	3.76

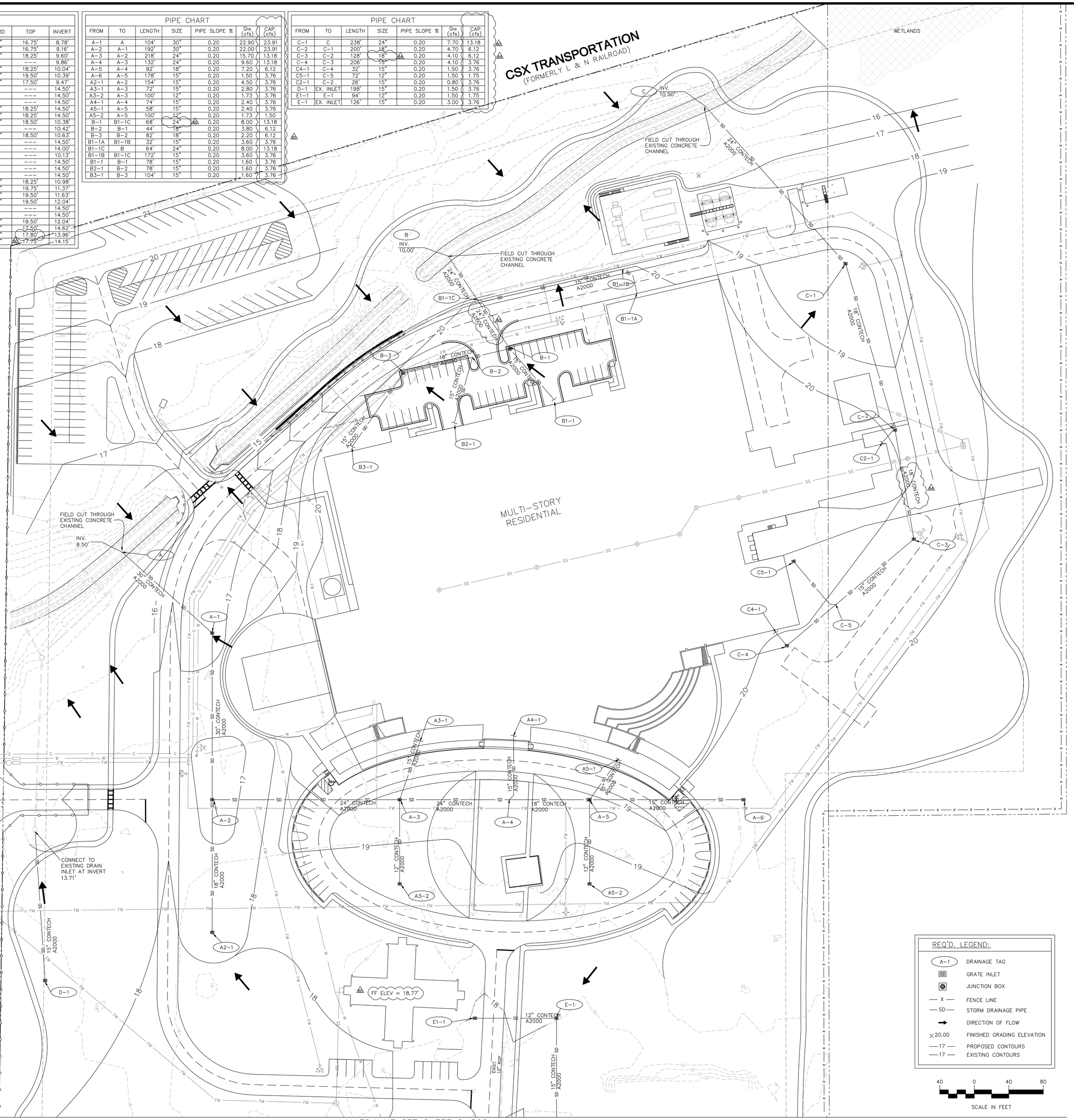

MATCHLINE SEE SHEET C–502

REQ'D. LEGEND:

(A–1)	DRAINAGE TAG
	GRATE INLET
	JUNCTION BOX
— X —	FENCE LINE
— SD —	STORM DRAINAGE PIPE
→	DIRECTION OF FLOW
×20.00	FINISHED GRADING ELEVATION
—17—	PROPOSED CONTOURS
—17—	EXISTING CONTOURS

40 0 40 80
SCALE IN FEET

PROPERTY OF THE UNITED STATES GOVERNMENT – FOR OFFICIAL USE ONLY. Do not remove this notice. Properly destroy documents when no longer needed.

GENERAL SERVICES ADMINISTRATION
77 FORSYTH STREET
SUITE 600
ATLANTA, GA 30303
TEL: (404)331–3200

AFRH The Premier Retirement Community for America's Veterans

JACOBS
PROJECT MANAGEMENT CONSULTANT TO THE GENERAL SERVICES ADMINISTRATION

YATES CONSTRUCTION

SFCS Architecture Engineering Planning Interiors

URS CORPORATION
2020 K ST, NW
SUITE 300
WASHINGTON D.C. 20006

ISSUED FOR CONSTRUCTION

CERTIFICATIONS

KEY PLAN

REVISION NOTES

MARK	DATE	DESCRIPTION
	09/08/08	ISSUED FOR CONSTRUCTION
	12/02/08	CIVIL, STRUCTURAL, AND ARCHITECTURAL REVISIONS
	02/05/09	ARCH, MECH, AND ELEC REVISION

GRAPHIC SCALE

A/E CON. NO.	GS–04P–07–EX–C–0099
A/E TASK NO.	
CONS. CONTR.	
CONS. WORK	
PRIME A/E	
SUB A/E	
CONSTR. CON.	
NAME	ARMED FORCES RETIREMENT HOME
STREET	1800 BEACH DRIVE
CITY/ST./ZIP	GULFPORT, MS 39507
BUILDING NO.	
OTHER BUILDING NOs.	
FACILITY CODE	
PROJECT TITLE	ARMED FORCES RETIREMENT HOME GULFPORT, MISSISSIPPI
PROJECT DESCRIPTION	NEW CONSTRUCTION
PROJECT NO.	31942982
GSA PM	STEVEN SMITH
SUBMISSION	ISSUED FOR CONSTRUCTION
SUB. DATE	09/08/2008
DRAWING TITLE	DRAINAGE PLAN
FILE NAME	
FLOOR NO.	
DRAWN BY	DATE DRAFTED:
CHECKED BY	SHEET SIZE: 34 X 44
DRAWING NO.	C 5 01 (DISCIPLINE SHEET TYPE SEQUENCE)
	SHEET OF

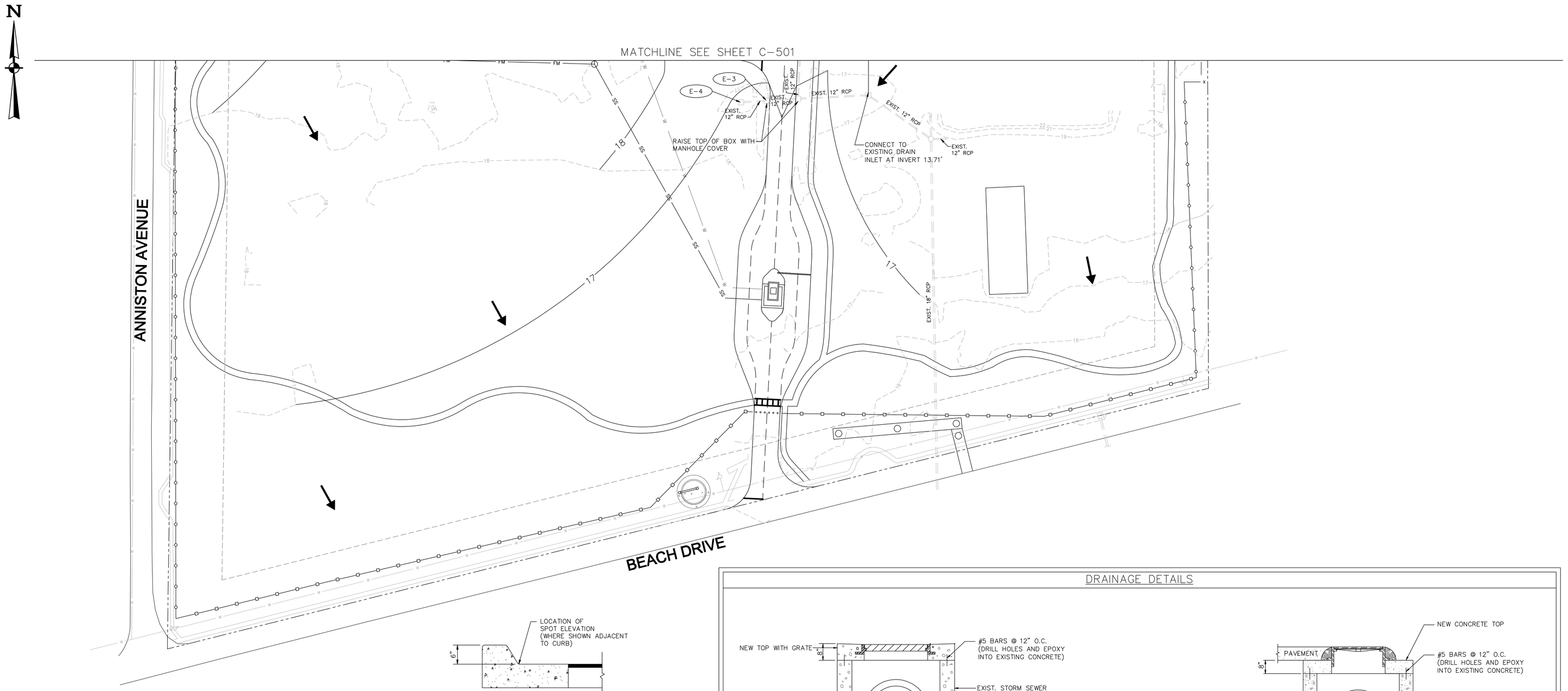

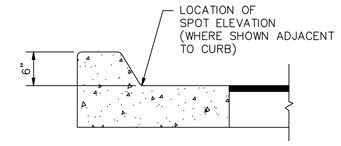

ELEVATION DETAIL
N.T.S.

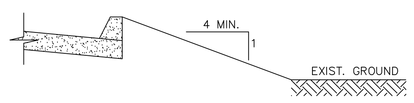

TYPICAL GRADING SECTION
N.T.S.

REQ'D. LEGEND:

A-1	DRAINAGE TAG
	GRATE INLET
	JUNCTION BOX
— X —	FENCE LINE
— SD —	STORM DRAINAGE PIPE
	DIRECTION OF FLOW
×20.00	FINISHED GRADING ELEVATION
— 17 —	PROPOSED CONTOURS
— 17 —	EXISTING CONTOURS

NOTES:

SPOT ELEVATIONS SHOWN ARE TOP OF PAVEMENT ELEVATIONS, UNLESS OTHERWISE NOTED. FOR TOP OF CURB ELEVATIONS, ADD 0.5'.

* SPOT ELEVATIONS ARE TOP OF PAVEMENT FLUSH WITH SIDEWALK NO CURB

THE CONTRACTOR SHALL BE RESPONSIBLE FOR DETERMINING THE EXACT LOCATION, DEPTH, AND SIZE OF ALL UNDERGROUND UTILITIES AND STRUCTURES AND SHALL BE LIABLE FOR ANY DAMAGE CAUSED BY FAILURE TO COMPLY WITH THESE INSTRUCTIONS.

ALL WORK SHALL CONFORM TO THE CITY OF GULFPORT, MISSISSIPPI STANDARD SPECIFICATIONS FOR PUBLIC WORKS CONSTRUCTION.

THE LOCATIONS OF UNDERGROUND UTILITIES AS SHOWN HEREON ARE BASED ON ABOVE-GROUND STRUCTURES AND RECORD DRAWINGS PROVIDED THE SURVEYOR. LOCATIONS OF UNDER-GROUND UTILITIES/STRUCTURES MAY VARY FROM LOCATIONS SHOWN HEREON. ADDITIONAL BURIED UTILITIES MAY BE ENCOUNTERED. NO EXCAVATIONS WERE MADE DURING THE PROGRESS OF THIS SURVEY TO LOCATE BURIED UTILITIES/STRUCTURES.

PIPE LENGTHS ARE APPROXIMATE AND FOR INFORMATION PURPOSES ONLY.

DRAINAGE DETAILS

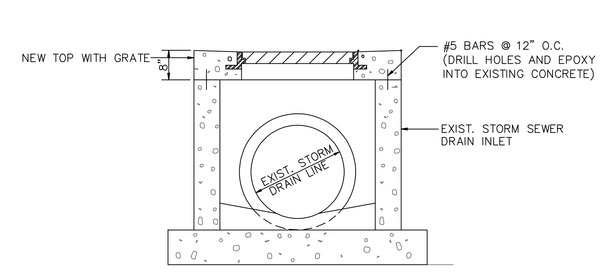

SECTION

MODIFIED EXIST. STORM SEWER DRAIN INLET
NTS

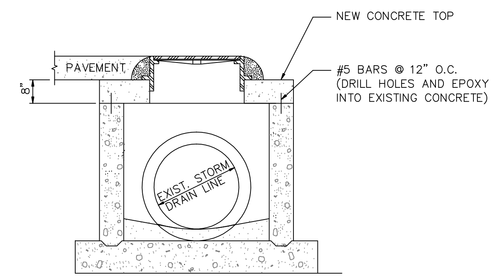

SECTION

MODIFIED EXIST. JUNCTION BOX DETAIL
NTS

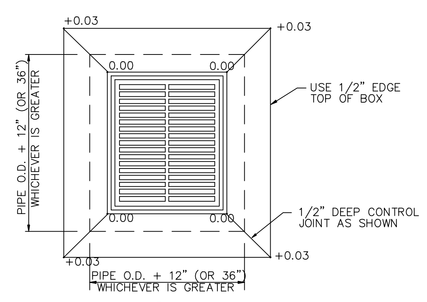

PLAN

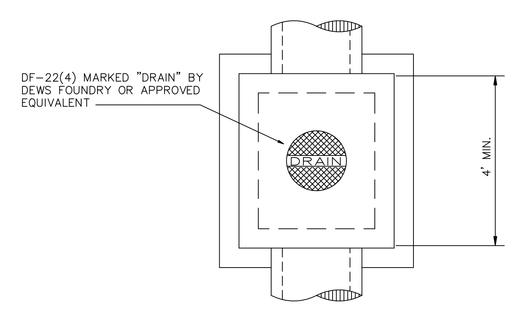

PLAN

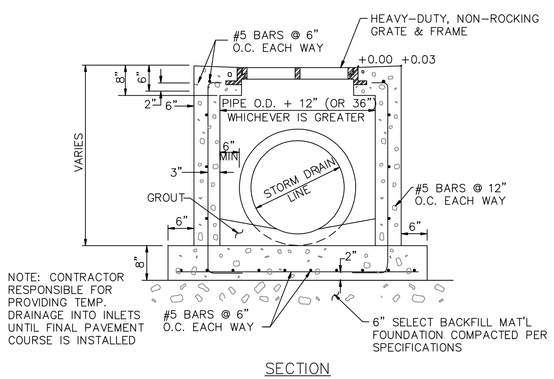

SECTION

NEW STORM SEWER DRAIN INLET
NTS

NOTE: STEPS REQ'D IN ALL DRAINAGE STRUCTURES OVER 4'-0" IN DEPTH.

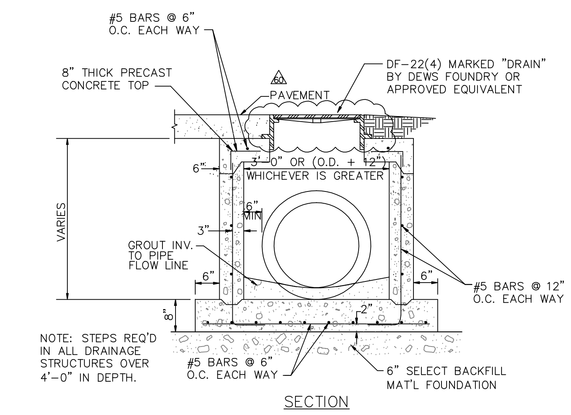

SECTION

NEW JUNCTION BOX DETAIL
NTS

40 0 40 80
SCALE IN FEET

PROPERTY OF THE UNITED STATES GOVERNMENT – FOR OFFICIAL USE ONLY. Do not remove this notice. Properly destroy documents when no longer needed.

GENERAL SERVICES ADMINISTRATION
77 FORSYTH STREET
SUITE 600
ATLANTA, GA 30303
TEL: (404)331-3200

AFRH The Premier Retirement Community for America's Veterans

JACOBS
PROJECT MANAGEMENT CONSULTANT TO THE GENERAL SERVICES ADMINISTRATION

YATES CONSTRUCTION

SFCS Architecture Engineering Planning Interiors

URS CORPORATION
2020 K ST, NW
SUITE 300
WASHINGTON D.C. 20006

ISSUED FOR CONSTRUCTION

CERTIFICATIONS

KEY PLAN

REVISION NOTES

MARK	DATE	DESCRIPTION
A	09/08/08	ISSUED FOR CONSTRUCTION
B	12/02/08	CIVIL, STRUCTURAL, AND ARCHITECTURAL REVISIONS
C	02/05/09	ARCH, MECH, AND ELEC REVISION

GRAPHIC SCALE

CONTRACTORS

A/E CON. NO.	GS-04P-07-EX-C-0099
A/E TASK NO.	
CONS. CONTR.	
CONS. WORK	
PRIME A/E	
SUB A/E	
CONSTR. CON.	

BUILDING

NAME	ARMED FORCES RETIREMENT HOME
STREET	1800 BEACH DRIVE
CITY/ST./ZIP	GULFPORT, MS 39507
BUILDING NO.	
OTHER	
BUILDING NOs.	
FACILITY CODE	

PROJECT

PROJECT TITLE	ARMED FORCES RETIREMENT HOME GULFPORT, MISSISSIPPI
PROJECT DESCRIPTION	NEW CONSTRUCTION
PROJECT NO.	31942982
GSA PM	STEVEN SMITH
SUBMISSION	ISSUED FOR CONSTRUCTION
SUB. DATE	09/08/2008

DRAWING

DRAWING TITLE	DRAINAGE PLAN & DETAILS
FILE NAME	
FLOOR NO.	
DRAWN BY	DATE DRAFTED:
CHECKED BY	SHEET SIZE: 34 X 44
DRAWING NO.	C 5 02 (DISCIPLINE SHEET TYPE SEQUENCE)
	SHEET OF

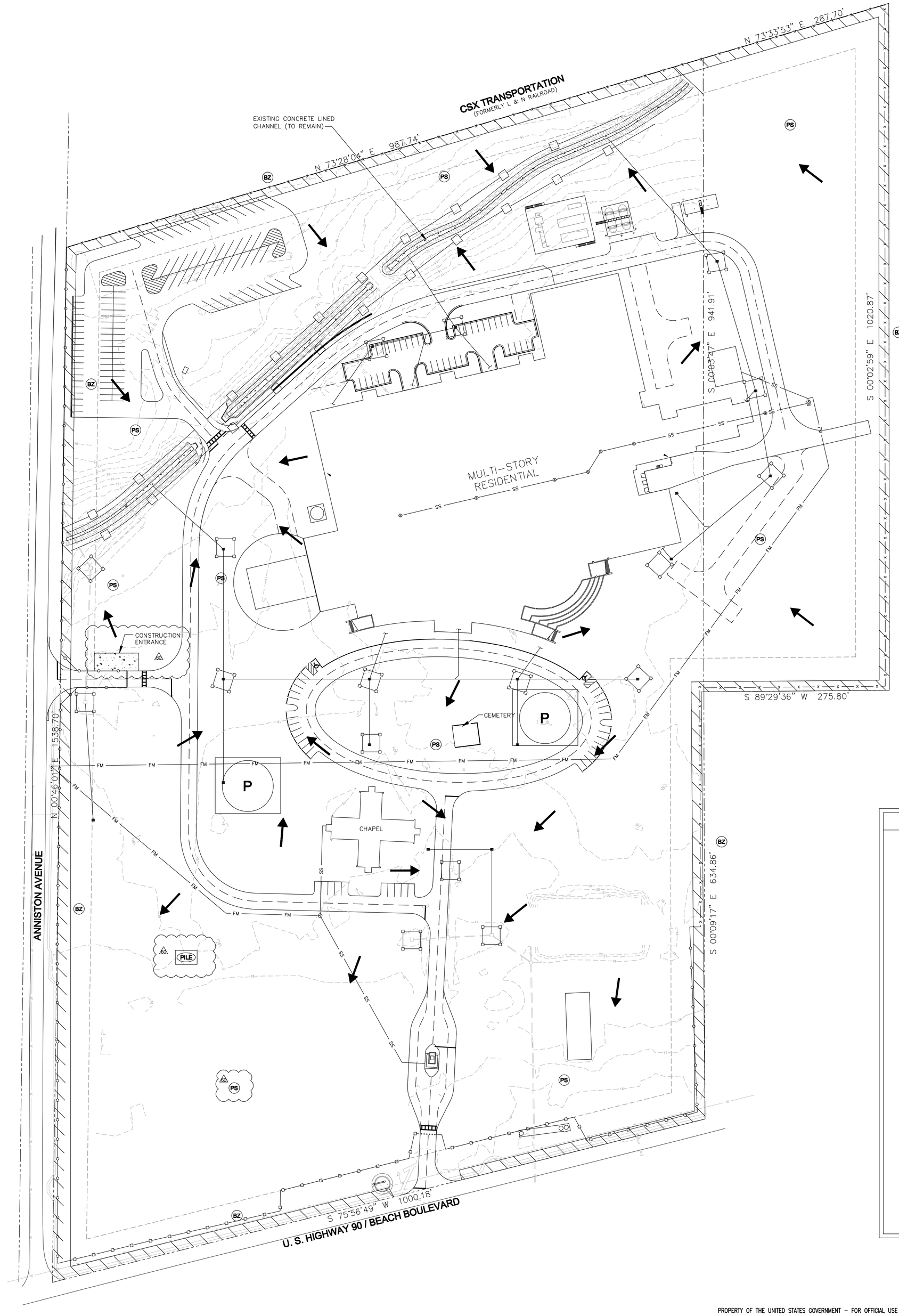

EROSION CONTROL DETAILS

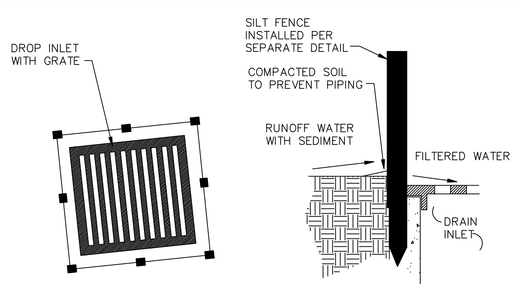

STORM DRAIN INLET PROTECTION DETAIL

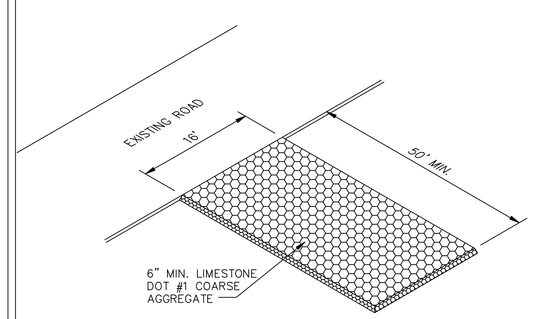

CRUSED ROCK CONSTRUCTION ENTRY DETAIL

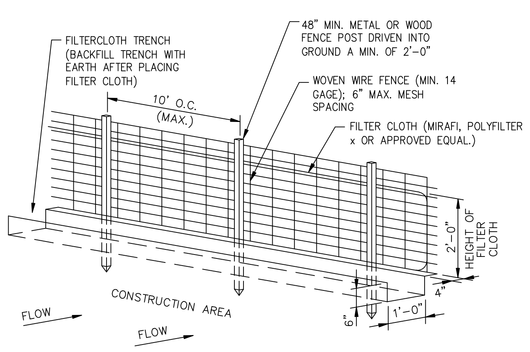

CONSTRUCTION SPECIFICATIONS

1. WOVEN WIRE FENCE TO BE FASTENED SECURELY TO FENCE POSTS BY USE OF WIRE TIES.
2. FILTER CLOTH TO BE FASTENED SECURELY TO WOVEN WIRE FENCE BY USE OF WIRE TIES SPACED EVERY 24" X 24".
3. SILT FENCES TO BE INSTALLED IN LOCATIONS AS SHOWN ON THIS EROSION AND SEDIMENT CONTROL PLAN PRIOR TO BEGINNING OF CONSTRUCTION TO CONTROL SEDIMENT.
4. SILT FENCES TO BE MAINTAINED AND CLEANED AS NECESSARY TO MAINTAIN IN FUNCTIONAL CONDITION.
5. SILT FENCES TO BE REMOVED AND THE AREA TO BE RESTORED TO ITS NATURAL CONDITION WHEN PERMANENT EROSION AND SEDIMENT CONTROL PROCEDURES ARE EFFECTIVE.

SILT FENCE DETAIL

REQ'D. LEGEND:

BZ	BUFFER ZONE
P	TREE PRESERVATION
19	EXISTING CONTOUR
19	FINISHED GRADE
	SEDIMENT FENCE
	CONSTRUCTION EXIT PAD
	RUNOFF DIRECTION
	STORM INLET PROTECTION
PILE	TOPSOIL STOCKPILE
PS	PERMANENT SEEDING

EROSION CONTROL NOTES:

NO LAND CLEARING AND GRADING SHALL BEGIN UNTIL ALL EROSION CONTROL MEASURES HAVE BEEN INSTALLED.

ALL EXPOSED AREAS SHALL SHALL BE SEEDED AS SPECIFIED WITHIN 30 DAYS OF FINAL GRADING.

SHOULD CONSTRUCTION STOP FOR LONGER THAN 15 DAYS, THE SITE SHALL BE SEEDED AS SPECIFIED.

MAINTAIN EROSION CONTROL MEASURES AFTER EACH RAIN AND AT LEAST ONCE A WEEK.

THIS PLAN SHALL NOT BE CONSIDERED ALL INCLUSIVE AS THE CONTRACTOR SHALL TAKE ALL NECESSARY PRECAUTIONS TO PREVENT SOIL SEDIMENT FROM LEAVING THE SITE.

CONTRACTOR SHALL COMPLY WITH ALL STATE AND LOCAL ORDINANCES THAT APPLY.

ADDITIONAL EROSION AND SEDIMENT CONTROL MEASURES WILL BE INSTALLED IF DEEMED NECESSARY BY ON SITE INSPECTION.

IF INSTALLATION OF STORM DRAINAGE SYSTEM SHOULD BE INTERRUPTED BY WEATHER OR NIGHTFALL, THE PIPE ENDS SHALL BE COVERED WITH FILTER FABRIC.

ALL EXISTING STRUCTURES, FENCING, TREES, ANF ETC. WITHIN CONSTRUCTION AREA SHALL BE REMOVED AND DISPOSED OF OFF SITE. ANY BURNING ON SITE SHALL BE SUBJECT TO LOCAL ORDINANCES.

CONTRACTOR SHALL BE RESPONSIBLE TO TAKE WHATEVER MEANS NECESSARY TO ESTABLISH PERMANENT SOIL STABILIZATION.

EROSION CONTROL CONSTRUCTION SPECIFICATIONS:

WASHING – WHEN NECESSARY, WHEELS SHALL BE CLEANED TO REMOVE SEDIMENT PRIOR TO ENTRANCE ONTO PUBLIC RIGHT-OF-WAY. WHEN WASHING IS REQUIRED, IT SHALL BE DONE ON AN AREA STABILIZED WITH CRUSHED STONE WHICH DRAINS INTO AN APPROVED SEDIMENT TRAP OR SEDIMENT BASIN. ALL SEDIMENT SHALL BE PREVENTED FROM ENTERING ANY STORM DRAIN DITCH OR WATERCOURSE THROUGH USE OF SAND BAGS, GRAVEL, BOARDS OR OTHER APPROVED METHODS.

MAINTENANCE – THE ENTRANCE SHALL BE MAINTAINED IN A CONDITION WHICH WILL PREVENT TRACKING OR FLOWING OF SEDIMENT ONTO PUBLIC RIGHT-OF-WAY. THIS MAY REQUIRE PERIODIC TOP DRESSING WITH ADDITIONAL STONE AS CONDITIONS DEMAND AND REPAIR AND/OR CLEANOUT OF ANY MEASURES USED TO TRAP SEDIMENT. ALL SEDIMENT SPILLED, DROPPED, WASHED OR TRACKED ONTO PUBLIC RIGHTS-OF-WAY MUST BE REMOVED IMMEDIATELY.

THE CONTRACTOR SHALL BE RESPONSIBLE FOR HOSING DOWN ADJACENT STREETS DAILY TO AVOID DIRT BUILD-UP ON ROADWAYS. NO CONCRETE TRUCKS SHALL BE WASHED-OUT OFF-SITE.

60 0 60 120
SCALE 1"=60'

PROPERTY OF THE UNITED STATES GOVERNMENT – FOR OFFICIAL USE ONLY. Do not remove this notice. Properly destroy documents when no longer needed.

GENERAL SERVICES ADMINISTRATION
77 FORSYTH STREET
SUITE 600
ATLANTA, GA 30303
TEL: (404)331-3200

AFRH The Premier Retirement Community for America's Veterans

JACOBS
PROJECT MANAGEMENT CONSULTANT TO THE GENERAL SERVICES ADMINISTRATION

YATES CONSTRUCTION

SFCS Architecture Engineering Planning Interiors

URS CORPORATION
2020 K ST, NW
SUITE 300
WASHINGTON D.C. 20006

ISSUED FOR CONSTRUCTION

CERTIFICATIONS

KEY PLAN

REVISION NOTES

MARK	DATE	DESCRIPTION
	01/04/08	ISSUED FOR CONSTRUCTION
1	09/08/08	RE-ISSUED FOR CONSTRUCTION
2	12/02/08	CIVIL, STRUCTURAL, AND ARCHITECTURAL REVISIONS

GRAPHIC SCALE

CONTRACTORS

A/E CON. NO.	GS-04P-07-EX-C-0099
A/E TASK NO.	
CONS. CONTR.	
CONS. WORK	
PRIME A/E	
SUB A/E	
CONSTR. CON.	

BUILDING

NAME	ARMED FORCES RETIREMENT HOME
STREET	1800 BEACH DRIVE
CITY/ST./ZIP	GULFPORT, MS 39507
BUILDING NO.	
OTHER BUILDING NOs.	
FACILITY CODE	

PROJECT

PROJECT TITLE	ARMED FORCES RETIREMENT HOME GULFPORT, MISSISSIPPI
PROJECT DESCRIPTION	NEW CONSTRUCTION
PROJECT NO.	31942982
GSA PM	STEVEN SMITH
SUBMISSION	ISSUED FOR CONSTRUCTION
SUB. DATE	09/08/2008

DRAWING

DRAWING TITLE	EROSION CONTROL PLAN
FILE NAME	
FLOOR NO.	
DRAWN BY	DATE DRAFTED:
CHECKED BY	SHEET SIZE: 34 X 44
DRAWING NO.	C 6 01 (DISCIPLINE SHEET TYPE SEQUENCE)
	SHEET OF

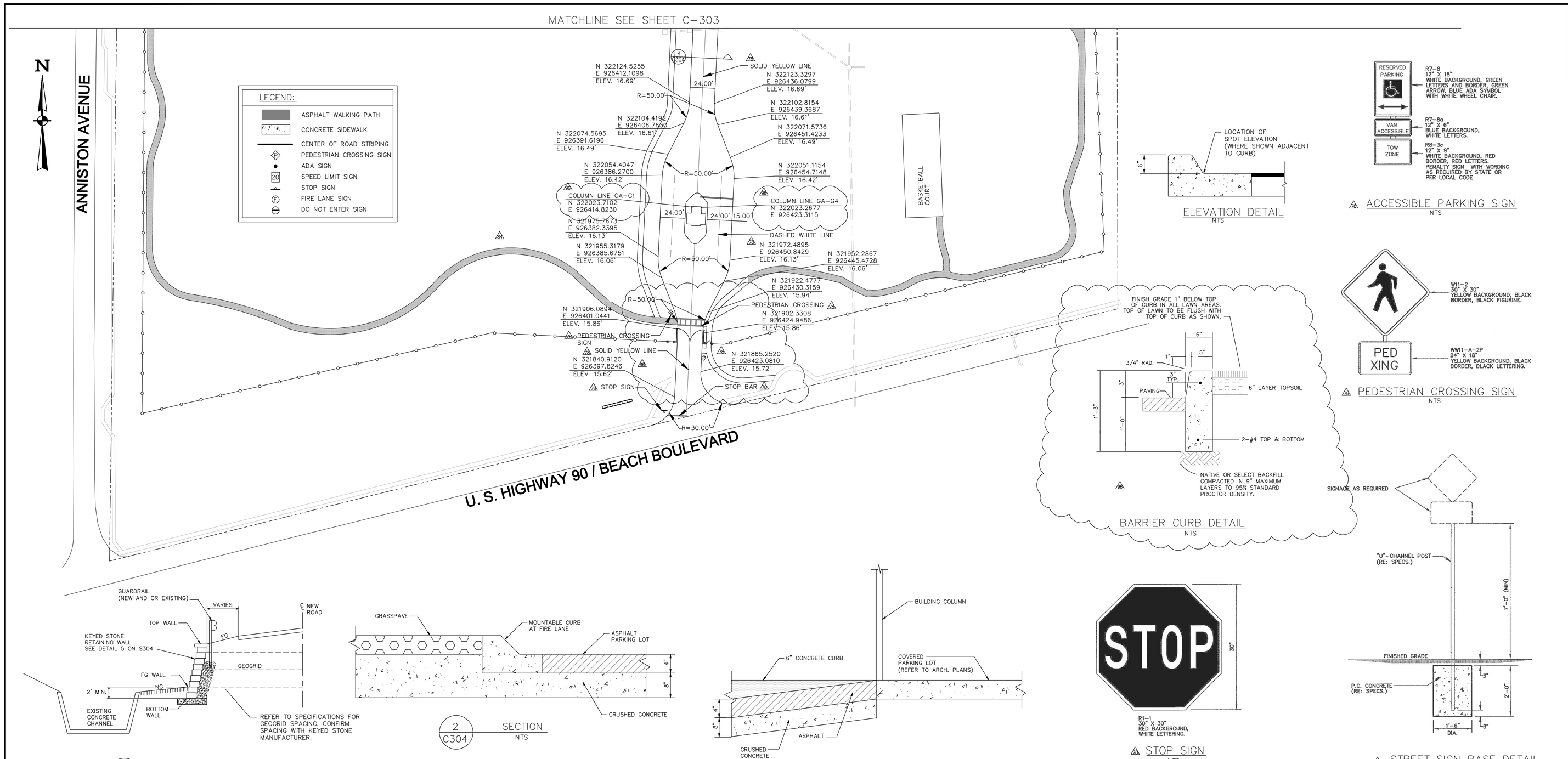

ELEVATION DETAIL
NTS

ACCESSIBLE PARKING SIGN
NTS

PEDESTRIAN CROSSING SIGN
NTS

BARRIER CURB DETAIL
NTS

1 C304 SECTION
NTS

2 C304 SECTION
NTS

3 C304 SECTION
NTS

STOP SIGN
NTS

STREET SIGN BASE DETAIL
NTS

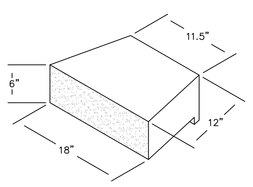

KEYED STONE UNIT

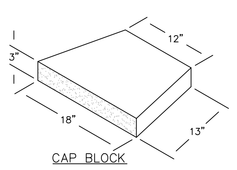

CAP BLOCK

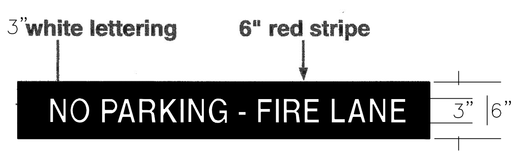

NO PARKING DETAIL
NTS

NO PARKING SIGN
NTS

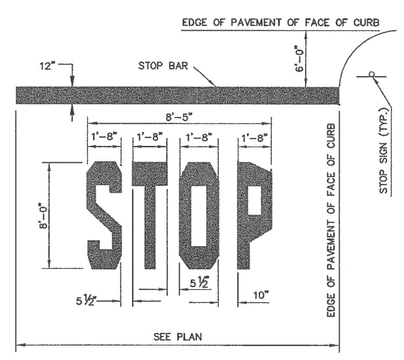

STOP BAR
NTS

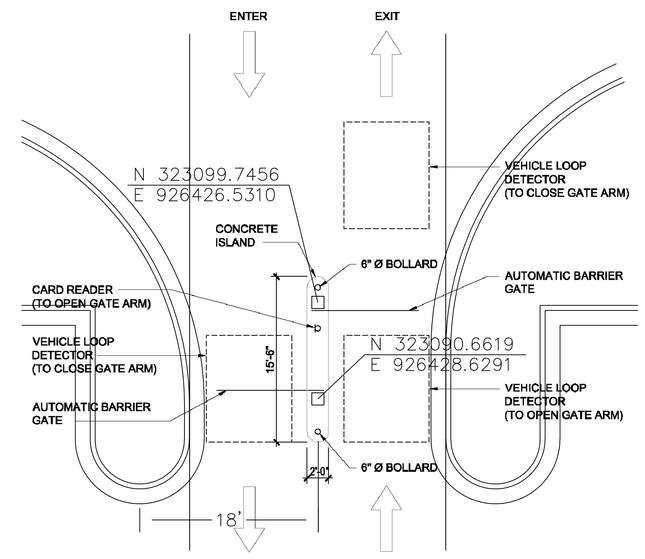

6 C304 PARKING CONTROL EQUIPMENT PLAN
NTS

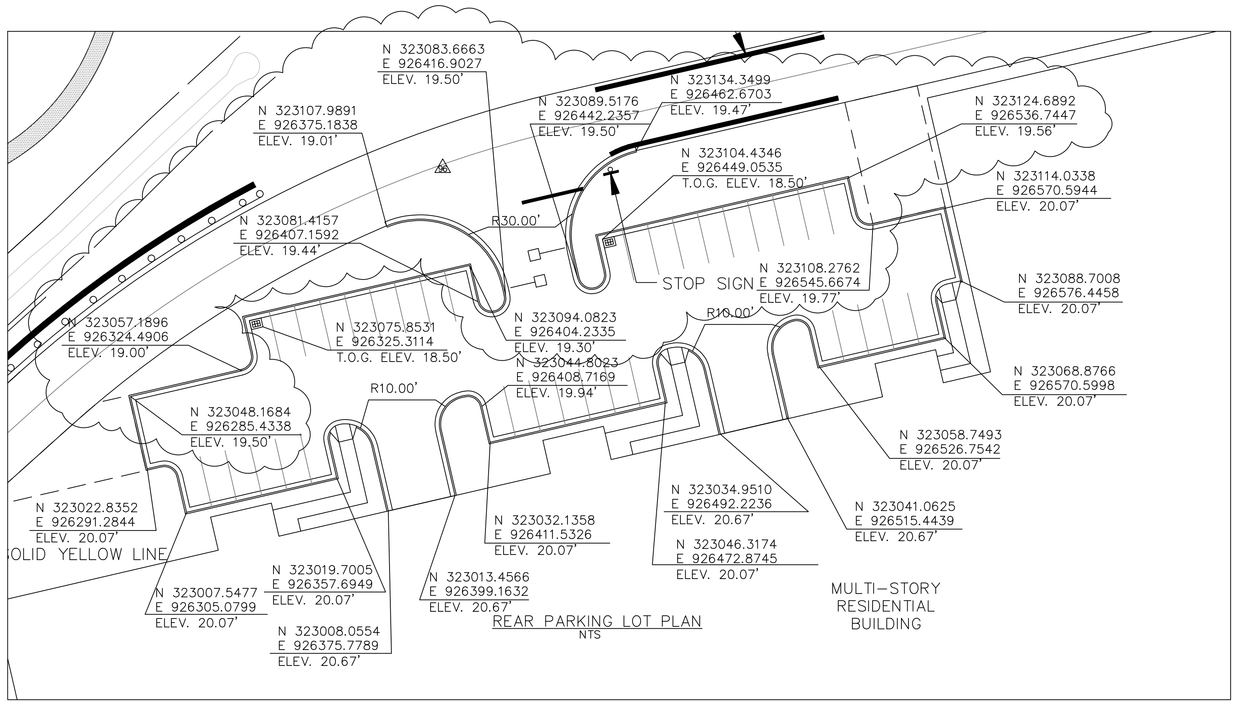

REAR PARKING LOT PLAN
NTS

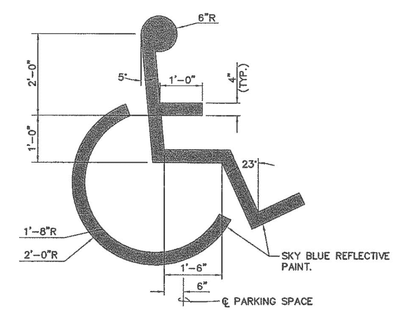

ADA PAVEMENT MARKING
NTS

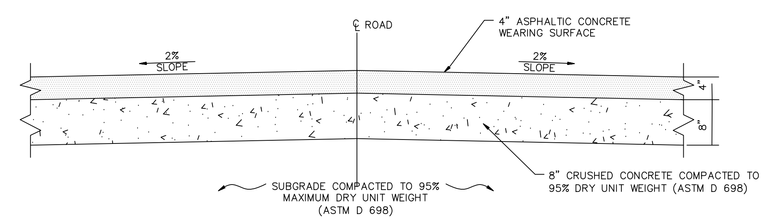

4 C304 SECTION
NTS

40 0 40 80
SCALE IN FEET

PROPERTY OF THE UNITED STATES GOVERNMENT – FOR OFFICIAL USE ONLY. Do not remove this notice. Properly destroy documents when no longer needed.

GSA
GENERAL SERVICES ADMINISTRATION
77 FORSYTH STREET
SUITE 600
ATLANTA, GA 30303
TEL: (404)331-3200

AFRH The Premier Retirement Community for America's Veterans
JE JACOBS
PROJECT MANAGEMENT CONSULTANT TO THE GENERAL SERVICES ADMINISTRATION

YATES CONSTRUCTION

SFCS Architecture Engineering Planning Interiors

URS
URS CORPORATION
2020 K ST, NW
SUITE 300
WASHINGTON D.C. 20006

GRAPHIC SCALE

KEY PLAN

SD C 125

REVISION NOTES

MARK	DATE	DESCRIPTION
A	09/08/08	ISSUED FOR CONSTRUCTION
B	12/02/08	CIVIL STRUCTURAL ARCH
C	06/04/09	ADDED SIGNAGE & DETAILS
D	08/14/09	SITE REVISIONS
E	02/03/10	CIVIL REVISIONS

CONTRACTORS

A/E CON. NO.	GS-04P-07-EX-C-0099
A/E TASK NO.	
CONS. CONTR.	
CONS. WORK	
PRIME A/E	
SUB A/E	
CONSTR. CON.	

BUILDING

NAME	ARMED FORCES RETIREMENT HOME
STREET	1800 BEACH DRIVE
CITY/ST./ZIP	GULFPORT, MS 39507
BUILDING NO.	
OTHER	
BUILDING NOs.	
FACILITY CODE	

PROJECT

PROJECT TITLE	ARMED FORCES RETIREMENT HOME GULFPORT, MISSISSIPPI
PROJECT DESCRIPTION	NEW CONSTRUCTION
PROJECT NO.	31942982
GSA PM	STEVEN SMITH
SUBMISSION	ISSUED FOR CONSTRUCTION
SUB. DATE	09/08/2008

DRAWING

DRAWING TITLE	GEOMETRIC PLAN
FILE NAME	
FLOOR NO.	
DRAWN BY	DATE DRAFTED:
CHECKED BY	SHEET SIZE: 34 X 44
DRAWING NO.	C 3 04 (DISCIPLINE SHEET TYPE SEQUENCE)
	SHEET OF

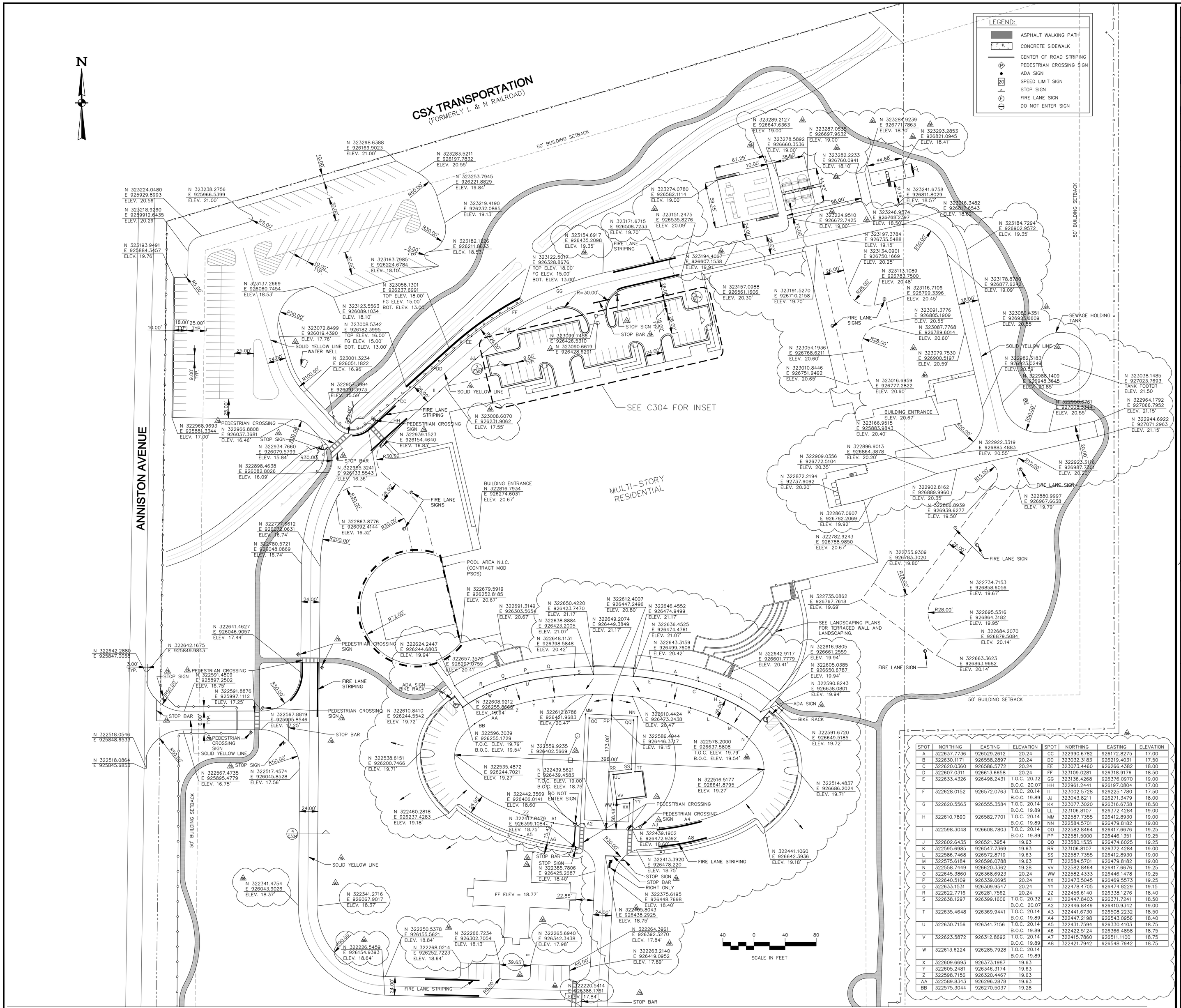

SPOT	NORTHING	EASTING	ELEVATION
A	322637.7736	926529.2612	20.24
B	322630.1171	926558.2897	20.24
C	322620.0360	926586.5772	20.24
D	322607.0311	926613.6658	20.24
E	322633.4326	926498.2431	T.O.C. 20.32 B.O.C. 20.07
F	322628.0152	926572.0763	T.O.C. 20.14 B.O.C. 19.89
G	322620.5563	926555.3584	T.O.C. 20.14 B.O.C. 19.89
H	322610.7890	926582.7701	T.O.C. 20.14 B.O.C. 19.89
I	322598.3048	926608.7803	T.O.C. 20.14 B.O.C. 19.89
J	322602.6435	926521.3954	19.63
K	322595.6985	926547.7369	19.63
L	322586.7468	926572.8719	19.63
M	322575.6184	926596.0788	19.63
N	322558.7449	926620.3362	19.28
O	322645.3860	926368.6923	20.24
P	322640.5109	926339.0695	20.24
Q	322633.1531	926309.9547	20.24
R	322622.7716	926281.7562	20.24
S	322638.1297	926399.1606	T.O.C. 20.32 B.O.C. 20.07
T	322635.4648	926369.9441	T.O.C. 20.14 B.O.C. 19.89
U	322630.7156	926341.7156	T.O.C. 20.14 B.O.C. 19.89
V	322623.5872	926312.8692	T.O.C. 20.14 B.O.C. 19.89
W	322613.6224	926285.7928	T.O.C. 20.14 B.O.C. 19.89
X	322609.6693	926373.1987	19.63
Y	322605.2481	926346.3174	19.63
Z	322598.7156	926320.4467	19.63
AA	322589.8343	926296.2878	19.63
BB	322575.3044	926270.5037	19.28

SPOT	NORTHING	EASTING	ELEVATION
CC	322990.6782	926172.8275	17.00
DD	323032.3183	926219.4031	17.50
EE	323073.4460	926266.4382	18.00
FF	323109.0281	926318.9176	18.50
GG	323136.4268	926376.0970	19.00
HH	322961.2441	926197.0804	17.00
II	323002.5728	926225.1780	17.50
JJ	323043.8211	926271.3479	18.00
KK	323077.3020	926316.6738	18.50
LL	323106.8107	926372.4284	19.00
MM	322587.7355	926412.8930	19.00
NN	322584.5701	926479.8182	19.00
OO	322582.8464	926417.6676	19.25
PP	322581.5000	926446.1351	19.25
QQ	323580.1535	926474.6025	19.25
RR	323106.8107	926372.4284	19.00
SS	322587.7355	926412.8930	19.00
TT	322584.5701	926479.8182	19.00
VV	322582.8464	926417.6676	19.25
WW	322582.4333	926446.1478	19.25
XX	322473.5045	926469.5573	19.25
YY	322478.4705	926474.8229	19.15
ZZ	322456.6140	926338.1276	18.40
A1	322447.8403	926371.7241	18.50
A2	322446.8449	926410.9342	19.00
A3	322441.6730	926508.2232	18.50
A4	322447.2198	926543.0956	18.40
A5	322431.7594	926330.4103	18.75
A6	322422.5124	926366.4858	18.75
A7	322415.7860	926511.1100	18.75
A8	322421.7942	926548.7942	18.75

GENERAL SERVICES ADMINISTRATION
77 FORSYTH STREET
SUITE 600
ATLANTA, GA 30303
TEL: (404)331-3200

AFRH The Premier Retirement Community for America's Veterans

JACOBS
PROJECT MANAGEMENT CONSULTANT TO THE GENERAL SERVICES ADMINISTRATION

YATES CONSTRUCTION

SFCS Architecture Engineering Planning Interiors

URS CORPORATION
2020 K ST, NW
SUITE 300
WASHINGTON D.C. 20006

SD C 124

CERTIFICATIONS

KENNETH E. THOMAS REGISTERED PROFESSIONAL ENGINEER 6310 STATE OF MISSISSIPPI

2/3/10

KEY PLAN

REVISION NOTES

MARK	DATE	DESCRIPTION
A	09/08/08	ISSUED FOR CONSTRUCTION
B	12/02/08	CIVIL STRUCTURAL ARCH
C	06/04/09	ADDED SIGNAGE & DETAILS
D	08/14/09	SITE REVISIONS
E	02/03/10	CIVIL REVISIONS

GRAPHIC SCALE

CONTRACTORS

A/E CON. NO.	GS-04P-07-EX-C-0099
A/E TASK NO.	
CONS. CONTR.	
CONS. WORK	
PRIME A/E	
SUB A/E	
CONSTR. CON.	

BUILDING

NAME	ARMED FORCES RETIREMENT HOME
STREET	1800 BEACH DRIVE
CITY/ST./ZIP	GULFPORT, MS 39507
BUILDING NO.	
OTHER	
BUILDING NOs.	
FACILITY CODE	

PROJECT

PROJECT TITLE	ARMED FORCES RETIREMENT HOME GULFPORT, MISSISSIPPI
PROJECT DESCRIPTION	NEW CONSTRUCTION
PROJECT NO.	31942982
GSA PM	STEVEN SMITH
SUBMISSION	ISSUED FOR CONSTRUCTION
SUB. DATE	09/08/2008

DRAWING

DRAWING TITLE	GEOMETRIC PLAN
FILE NAME	
FLOOR NO.	
DRAWN BY	DATE DRAFTED:
CHECKED BY	SHEET SIZE: 34 X 44
DRAWING NO.	C 3 03 DISCIPLINE SHEET TYPE SEQUENCE SHEET OF

MATCHLINE SEE SHEET C-304

PROPERTY OF THE UNITED STATES GOVERNMENT – FOR OFFICIAL USE ONLY. Do not remove this notice. Properly destroy documents when no longer needed.