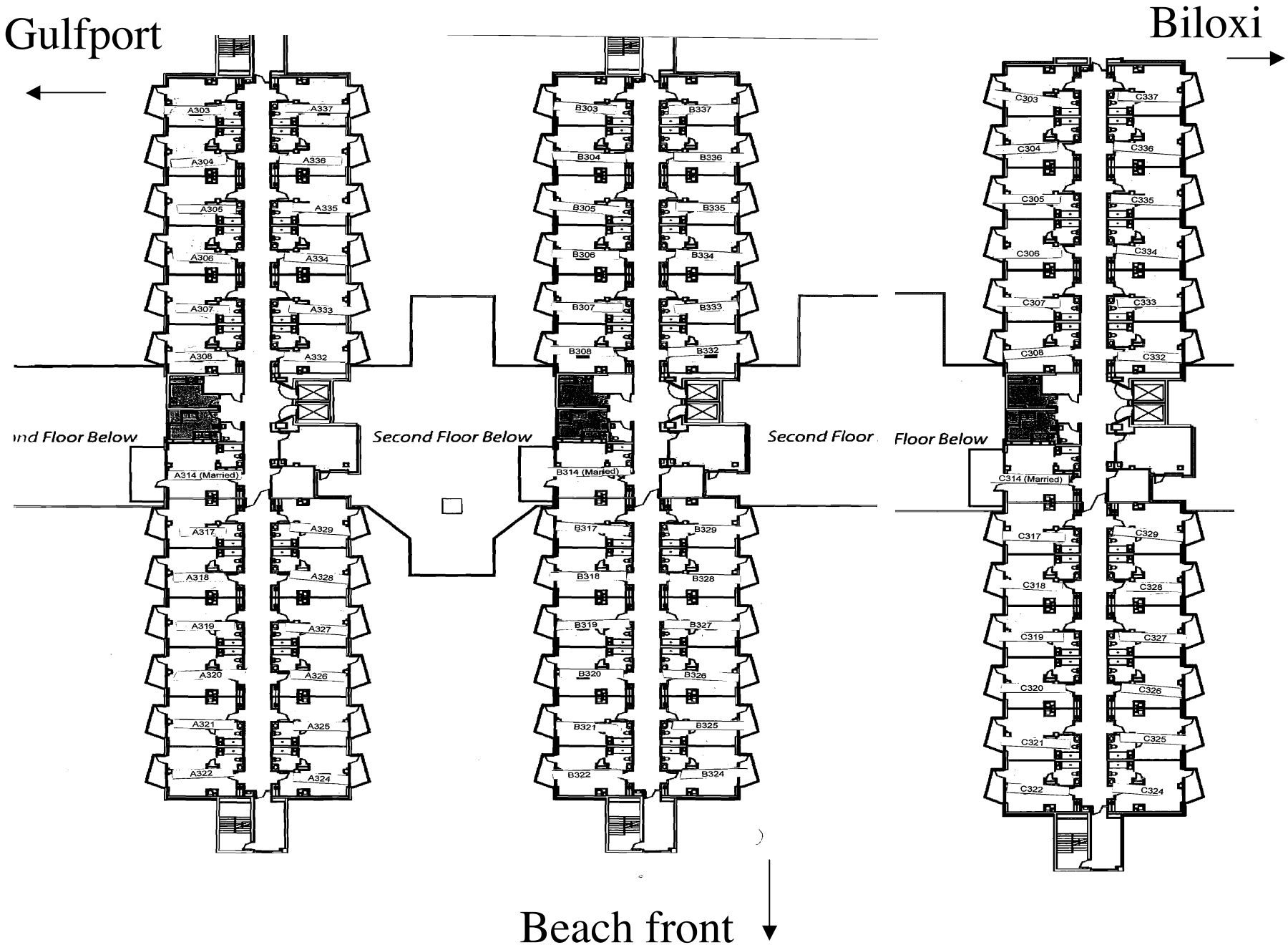
Gulfport
Biloxi
Beach front
A303
A304
A305
A306
A307
A308
A314 (Married)
A317
A318
A319
A320
A321
A322
A324
A325
A326
A327
A328
A329
A332
A333
A334
A335
A336
A337
B303
B304
B305
B306
B307
B308
B314 (Married)
B317
B318
B319
B320
B321
B322
B324
B325
B326
B327
B328
B329
B332
B333
B334
B335
B336
B337
C303
C304
C305
C306
C307
C308
C314 (Married)
C317
C318
C319
C320
C321
C322
C324
C325
C326
C327
C329
C332
C333
C334
C335
C336
C337
Second Floor Below
Second Floor
Floor Below